OLIVER HIGH SCHOOL

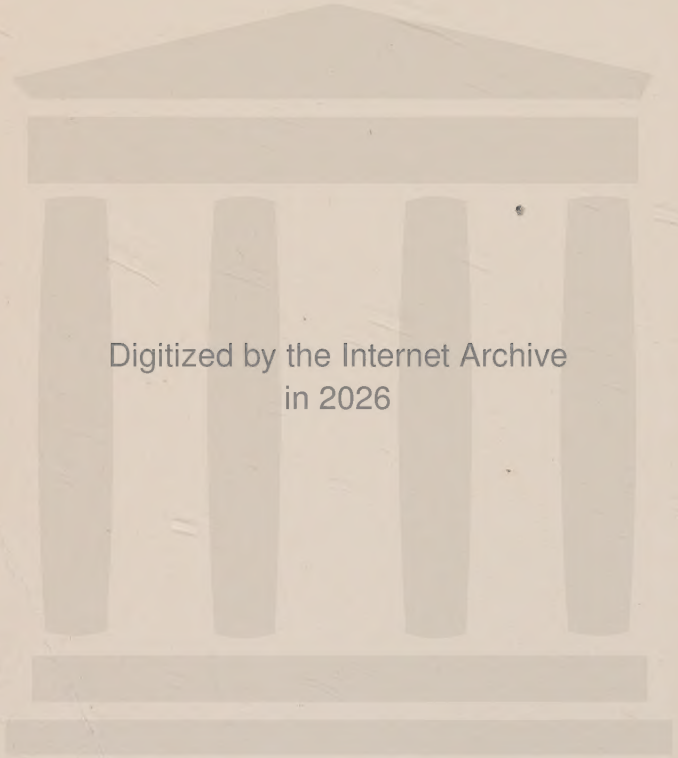

Digitized by the Internet Archive
in 2026

https://archive.org/details/advancedalgebraf0000will

ADVANCED ALGEBRA

FOR

COLLEGES AND SCHOOLS

BY

WILLIAM J. MILNE, PH.D., LL.D.

PRESIDENT OF NEW YORK STATE NORMAL COLLEGE, ALBANY, N.Y.

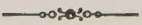

NEW YORK · CINCINNATI · CHICAGO

AMERICAN BOOK COMPANY

Copyright, 1901 and 1902, by
WILLIAM J. MILNE.

Entered at Stationers' Hall, London.

ADVANCED ALGEBRA.

E-P 24

PREFACE

MANY colleges and universities offer an optional examination in "Advanced Algebra" in addition to the examination in "Elementary Algebra" required of all candidates for matriculation. The scientific and technical schools have increased from time to time the amount of algebra that must be mastered before students may pass the entrance examinations, until their requirements at present for admission are substantially equal to what is commonly included under "Advanced Algebra." This work is designed to prepare students in a thorough manner to meet both of these tests.

The earlier pages of the work are identical with the author's Academic Algebra, but several of the topics discussed in that book have been modified in treatment or enlarged in scope, so that they may the better meet the requirements of an advanced course, and more than one hundred sixty pages of new matter have been added. Consequently this volume contains a *complete* course in both elementary and advanced algebra.

The treatment is believed to be sufficiently full and rigorous to meet the demands of college courses in algebra, and to give a scholarly basis for specializing in this science.

The author desires especially to express his indebtedness to Professor J. H. Tanner of the Department of Mathematics at Cornell University for valuable suggestions regarding the treatment of several topics.

WILLIAM J. MILNE.

STATE NORMAL COLLEGE,
ALBANY, N.Y.

A BRIEFER COURSE

TEACHERS who desire a briefer course in algebra may omit or postpone for a second reading:

1. All of the following sections:

§§ 212, 248–251, 383, 393, 394, 433–436, 447, 562, 564–566, 584, 586, 587, 622–624, 632–642, 647–654, 665, 682–684, 691, 692, 697, 710.

2. As much of the following sections as pertains to formal proofs or discussions — usually given in fine print following the statement of principles:

§§ 51, 55, 56, 63, 79, 81–83, 85, 103, 104, 114, 149, 150, 157, 165, 196, 200, 208; and proofs of equivalence in simultaneous simple equations, 214, 218, 229, 244, 246, 279–281, 284 (as much as is found on page 269), 289, 304 (special cases on page 314), 472, 474, 480, 482, 520–524, 527 (page 469), 563 (page 493).

3. The last part of each set of exercises.

A better plan, perhaps, is to solve the odd-numbered exercises, or the even-numbered exercises, in each set.

It is suggested, however, that no exercises should be omitted before page 186. The facility gained by working a large number of exercises in the fundamental operations is valuable, even if considerable time is spent in this part of the work; for it will insure very rapid and certain progress in the subsequent chapters.

CONTENTS

	PAGE
Algebraic Solutions	7
Definitions and Notation	12
Addition	21
Subtraction	32
Multiplication	45
Division	71
Review	87
Factoring	90
Review of Factoring	108
Highest Common Divisor	115
Lowest Common Multiple	126
Fractions	133
Review of Fractions	160
Simple Equations	163
Simultaneous Simple Equations	186
Involution	214
Evolution	221
Theory of Exponents	239
Radicals	250
Review	274
Quadratic Equations	278
General Review	316
Ratio and Proportion	325
Variation	338

PAGE

PROGRESSIONS 344
IMAGINARY AND COMPLEX NUMBERS 363
INEQUALITIES 373
VARIABLES AND LIMITS 379
INCOMMENSURABLE NUMBERS 388
INTERPRETATION OF RESULTS 393
INDETERMINATE EQUATIONS 400
MATHEMATICAL INDUCTION 404
BINOMIAL THEOREM 408
LOGARITHMS 415
PERMUTATIONS AND COMBINATIONS 434
PROBABILITY 445
SIMPLE CONTINUED FRACTIONS 458
THEORY OF NUMBERS 470
DETERMINANTS 479
CONVERGENCY OF SERIES 496
UNDETERMINED COEFFICIENTS 509
EXPONENTIAL AND LOGARITHMIC SERIES 524
SUMMATION OF SERIES 533
FUNCTIONS OF A SINGLE VARIABLE 545
THEORY OF EQUATIONS 562

ADVANCED ALGEBRA

ALGEBRAIC SOLUTIONS

1. Problem 1. A man had 400 acres of corn and oats. If there were 3 times as many acres of corn as of oats, how many acres were there of each?

Arithmetical Solution

A certain number = the number of acres of oats.
Then, 3 times that number = the number of acres of corn,
and 4 times that number = the number of acres of both;
therefore, 4 times that number = 400.
Hence, the number = 100, the number of acres of oats,
and 3 times the number = 300, the number of acres of corn.

Algebraic Solution

Let x = the number of acres of oats.
Then, $3x$ = the number of acres of corn,
and $4x$ = the number of acres of both;
therefore, $4x = 400$.
Hence, $x = 100$, the number of acres of oats,
and $3x = 300$, the number of acres of corn.

2. An expression of equality between two numbers or quantities is called an **Equation.**

$5x = 30$ is an equation.

3. A question that can be answered only after a course of reasoning is called a **Problem.**

4. The process of finding the result sought is called the **Solution** of the problem.

5. The expression in algebraic language of the conditions of a problem is called the **Statement** of the problem.

Solve algebraically the following problems:

2. A horse and saddle cost \$ 50. If the horse cost 4 times as much as the saddle, what was the cost of each?

3. A bicycle and suit cost \$ 90. How much did each cost, if the bicycle cost 5 times as much as the suit?

4. Of 240 stamps that Harry and his sister collected, Harry collected 3 times as many as his sister. How many did each collect?

5. If Mr. Brown and his son together had \$ 220, and Mr. Brown had 10 times as much as his son, how much money had each?

6. In a room containing 45 students there were twice as many girls as boys. How many were there of each?

7. A had 7 times as many sheep as B, and both together had 608. How many sheep had each?

8. A and B began business with a capital of \$ 7500. If A furnished half as much capital as B, how much did each furnish?

SUGGESTION. — Let x = the number of dollars A furnished.

9. A man bought a cow and a calf for \$ 36, paying 8 times as much for the cow as for the calf. What was the cost of each?

10. James sold his pony and a saddle for \$ 60. If the saddle sold for $\frac{1}{3}$ as much as the pony, what was the selling price of each?

11. A certain number added to twice itself equals 96. What is the number?

12. A farmer raised a certain number of bushels of wheat, 4 times as much corn, and 3 times as much barley. If there were in all 4000 bushels of grain, how many bushels of each kind did he raise?

13. A boy bought a bat, a ball, and a glove for \$ 2.25. If the bat cost twice as much as the ball, and the glove cost 3 times as much as the bat, what was the cost of each?

14. In a fire B lost twice as much as A, and C lost 3 times as much as A. If their combined loss was $300, what was the loss of each?

15. A house and lot cost $3000. If the house cost 4 times as much as the lot, what was the cost of each?

16. In a business enterprise the joint capital of A, B, and C was $2100. If A's capital was twice B's, and B's was twice C's, what was the capital of each?

17. John, William, and George together had 120 marbles. If William had twice as many as John, and George had 3 times as many as John, how many had each?

18. In an orchard of apple, pear, and cherry trees, containing 1690 trees in all, there were 4 times as many cherry trees as pear trees, and twice as many apple trees as cherry trees. How many trees were there of each kind?

19. A number plus itself, plus twice itself, plus 4 times itself, is equal to 72. What is the number?

20. Charles is twice as old as his younger brother, and half as old as his older brother. If the sum of the ages of the three brothers is 28 years, what is the age of each?

21. A farmer had twice as many sheep as horses, and twice as many hogs as sheep and horses together. If there were in all 360 animals, how many were there of each kind?

22. A tract of land containing 640 acres was divided into three farms, such that the first was 3 times as large as the second, and the third 4 times as large as the first. How many acres did each farm contain?

23. Three boys divided 160 marbles among themselves so that one of them received twice as many as each of the others. How many did each receive?

24. Divide 30 into two parts, one of which is 14 times the other.

25. Divide 18 into three parts, such that the first is twice the third, and the second is 3 times the third.

26. Divide 21 into three parts, such that the first is twice the second, and the second is twice the third.

27. Divide 36 into three parts, such that the first is twice the second, and the third is equal to twice the sum of the first and second.

28. Three newsboys sold 60 papers. If the first sold twice as many as the second, and the third sold 3 times as many as the second, how many did each sell?

29. Henry earned a certain number of dollars per week. With 4 weeks' earnings he purchased a rifle, and with 20 weeks' earnings, a bicycle. If both together cost \$72, how much did he earn per week? How much did the rifle cost? the bicycle?

30. A man sold some ducks for 50 cents each, and the same number of geese for 75 cents each. If for all he received \$12.50, how many of each did he sell?

31. John has 5 times as much money as James. James has 24 cents less than John. How much has each?

32. A man had 675 sheep in three fields. If there were twice as many in the first field as in the second, and twice as many in the third field as in both of the others, how many sheep were there in each field?

33. A man bequeathed to his daughter twice as much money as to his son, and to his wife 3 times as much as to his daughter. If all together received \$9000, how much did each receive?

34. A plumber and two helpers together earned \$7.50 per day. How much did each earn per day, if the plumber earned 4 times as much as each helper?

35. What number added to $\frac{2}{3}$ of itself equals 20?

SOLUTION

Let $x =$ the number

Then, $x + \frac{2}{3}x = 20,$

$\frac{5}{3}x = 20,$

$\frac{1}{3}x = 4.$

Therefore, $x = 12,$ the number.

36. If $\frac{1}{5}$ of a number is added to the number, the sum is 12. What is the number?

37. If $\frac{1}{3}$ of a number is added to twice the number, the sum is 35. What is the number?

38. The difference between 4 times a certain number and $\frac{1}{4}$ of the number is 30. What is the number?

39. The difference between $\frac{2}{3}$ of a certain number and $\frac{2}{5}$ of it is 16. What is the number?

40. After spending $\frac{1}{2}$ of my money and losing $\frac{1}{5}$ of it, I had \$30. How much had I at first?

41. The difference between twice a certain number and $\frac{2}{3}$ of it is 20. What is the number?

42. The number 150 can be divided into two parts, one of which is $\frac{3}{7}$ of the other. What are the parts?

43. One part of 45 is $\frac{5}{4}$ of the other. What are the parts?

44. Find two parts of 30 such that one is $\frac{7}{8}$ of the other.

45. To A, B, and C I owe in all \$93. If I owe A $\frac{2}{3}$ as much as C, and B $\frac{2}{5}$ as much as C, how much do I owe each?

46. The length of a field is $1\frac{2}{5}$ times its width, and the distance around the field is 120 rods. If the field is rectangular, what are its dimensions?

47. A, B, C, and D buy \$16,000 worth of railroad stock. How much does A take, if B takes 3 times as much as A, C twice as much as A and B together, and D $\frac{1}{3}$ as much as A, B, and C together?

48. In one season an orchard bore 650 bushels of fruit, consisting of $\frac{3}{4}$ as many bushels of pears as of peaches, and twice as many bushels of apples as of pears. How many bushels were there of each?

49. A horse, harness, and carriage cost \$340. If the horse cost 3 times as much as the harness, and the carriage cost $1\frac{1}{2}$ times as much as the horse, what was the cost of each?

DEFINITIONS AND NOTATION

6. The ideas of number and the knowledge of the processes with abstract numbers that the student has gained in arithmetic are a proper and necessary introduction to his work in algebra; but since number is discussed in a more *general* way in algebra than in arithmetic, many arithmetical processes, terms, and symbols, as 'addition,' 'subtraction,' 'greater,' 'less,' 'exponent,' '+,' '−,' etc., must now be *extended* in meaning and application.

For example, in an arithmetical sense 8 cannot be subtracted from 5, nor does $8^{\frac{2}{3}}$ have any meaning; but in an algebraic sense, as will be shown hereafter, 8 can be subtracted from 5 and $8^{\frac{2}{3}}$ is as intelligible as 8^2.

Indeed, the processes and principles of arithmetic are but special cases of the more fundamental processes and principles of algebra.

7. A unit or an aggregate of units is called a **Whole Number**, or an **Integer**.

One of the equal parts of a unit or an aggregate of equal parts of a unit is called a **Fractional Number**.

Such numbers are called *Arithmetical*, or *Absolute Numbers*.

8. Arithmetical numbers have fixed and known values, and are represented by symbols called **numerals**; as 1, 2, 3, etc., Arabic *figures*, and I, V, X, etc., Roman *letters*.

9. It is often convenient, in solving a problem, to employ letters, such as x, y, z, to represent the numbers whose values are sought; and, in stating a rule, to employ letters to represent the numbers that must be given whenever the rule is applied.

Numbers represented by letters are called **Literal Numbers**.

For example, the volume of any rectangular prism is equal to the area of the base multiplied by the height. By using v for volume, a for area of base, and h for height, this rule is abbreviated to

$$v = a \times h.$$

When $a = 60$ and $h = 5$, $v = 60 \times 5 = 300$;

when $a = 36$ and $h = 10$, $v = 36 \times 10 = 360$; etc.

In each problem to which this rule applies a and h represent *fixed, known* values, but in consequence of being used for all problems of this class, a and h represent numbers to which *any arithmetical values whatever* may be assigned. Hence, the arithmetical idea of number is extended as follows.

10. A literal number to which any value can be assigned at pleasure is called a **General Number.**

11. A number whose value is known or a number to which any value can be assigned is called a **Known Number.**

The numerals, 3 and $4\frac{2}{3}$, and the general numbers a and h in $v = a \times h$, in § 9, are known numbers.

Known literal numbers are generally represented by the *first letters* of the alphabet.

12. A number whose value is to be found is called an **Unknown Number.**

Unknown numbers are usually represented by the *last letters* of the alphabet.

ALGEBRAIC SIGNS

13. The **Sign of Addition** is $+$, read '*plus.*'

It indicates that the number following it is to be added to the number preceding it.

$a + b$, read 'a plus b,' indicates that b is to be added to a.

14. The **Sign of Subtraction** is $-$, read '*minus.*'

It indicates that the number following it is to be subtracted from the number preceding it.

$a - b$, read 'a minus b,' indicates that b is to be subtracted from a.

15. The **Sign of Multiplication** is $\times$ or $\cdot$, read '*multiplied by.*'

It indicates that the number preceding it is to be multiplied by the number following it.

$a \times b$, or $a \cdot b$, indicates that a is to be multiplied by b.

The sign of multiplication is usually omitted in algebra, except between figures.

$a \times b$, or $a \cdot b$, may be abbreviated to ab. $x \times y$ to xy, $4 \times b$ to $4b$, etc. But 3×5 cannot be written 35, because 35 means $30 + 5$.

16. The **Sign of Division** is $\div$, read '*divided by.*'

It indicates that the number preceding it is to be divided by the number following it.

$a \div b$ indicates that a is to be divided by b.

Division may be indicated also by writing the dividend above the divisor with a line between them.

Such indicated divisions are called *Fractions.* (Cf. § 158.)

$\frac{a}{b}$ indicates that a is to be divided by b.

17. The **Sign of Equality** is $=$, read '*is equal to*' or '*equals.*'

18. The **Sign of Inequality** is $>$ or $<$.

When used between two numbers, it signifies that they are unequal, the greater number being at the opening of the sign.

$a > b$ is read '*a is greater than b.*'

$x < 5$ is read '*x is less than 5.*'

19. The **Signs of Aggregation** are: the *Parenthesis,* ( ); the *Vinculum,* $\overline{\ \ }$; the *Brackets,* [ ]; the *Braces,* { }; and the *Vertical Bar,* |.

They show that the expressions included by them are to be treated as single numbers.

Thus, each of the forms $(a + b)c$, $\overline{a + b} \cdot c$, $[a + b]c$, $\{a + b\}c$, and $\begin{matrix} a \\ + \\ b \end{matrix}\Big|c$, signifies that the sum of a and b is to be multiplied by c.

When numbers are included by any of the signs of aggregation, they are commonly said to be *in parenthesis.*

20. The **Sign of Continuation** is $\cdot\ \cdot\ \cdot\ \cdot$ or ----, read '*and so on,*' or '*and so on to.*'

2, 4, 6, 8, ---- is read '2, 4, 6, 8, and so on.'

21. The **Sign of Deduction** is $\therefore$. It signifies *therefore* or *hence.*

FACTORS, POWERS, AND ROOTS

22. Each of two or more numbers which multiplied together produce a given number is called a **Factor** of the number.

Since $12 = 2 \times 6$, or 4×3, each of these numbers is a factor of 12.
Since $3ab = 3 \times a \times b$, each of these numbers is a factor of $3ab$.

23. When a factor of a number is considered as the multiplier of the remaining factor, it is called a **Coefficient** of that factor.

In $7x$, $5ax$, bxy, and $(a-b)x$, the coefficients of x are 7, $5a$, by, and $(a-b)$; in bxy, bx is the coefficient of y.

Coefficients are *Numerical*, *Literal*, or *Mixed*, according as they are composed of *figures*, *letters*, or both *figures and letters*.

When no numerical coefficient is expressed, the coefficient may be considered to be 1.

24. When a number is used a certain number of times as a factor, the product is called a **Power** of the number.

Powers are *named* from the number of times the number is used as a factor.

When a is used *twice* as a factor, the product is the *second* power of a; when a is used *three* times as a factor, the product is the *third* power of a; four times, the *fourth* power of a; n times, that is, any number of times, the nth power of a.

The *second* power is also called the *square*, and the *third* power the *cube*.

The product indicated by $a \times a \times a \times a \times a$ may be more briefly indicated by a^5. Likewise, if a is to be used n times as a factor, the product may be indicated by a^n.

25. A figure or letter placed a little above and to the right of a number is called an **Index** or an **Exponent** of the power thus indicated.

The integers that the student has been using in arithmetic have been positive integers.

When the exponent is a positive integer, it indicates the number of times that the number is to be used as a factor.

5^2 indicates that 5 is to be used twice as a factor; a^3 indicates that a is to be used 3 times as a factor.

When no exponent is written, the exponent is regarded as 1.

5 is regarded as the first power of 5, and a^1 is usually written a.

The terms coefficient and exponent should be carefully distinguished.

Thus, $5a = a + a + a + a + a$, but $a^5 = a \times a \times a \times a \times a$.

26. One of the equal factors of a number is called a **Root** of the number.

5 is a root of 25; a is a root of a^4; $4x$ is a root of $64x^3$.

Roots are *named* from the number of equal factors into which the number is separated.

One of the *two* equal factors of a number is its *second* root; one of the *three* equal factors of a number is its *third* root; one of the *four* equal factors, the *fourth* root; one of the n equal factors, the nth root.

The *second* root of a number is also called its *square* root, and its *third* root is called its *cube* root.

27. The symbol which denotes that a root of a number is sought is $\sqrt{\ }$, written before the number.

It is called the **Root Sign**, or the **Radical Sign.**

A figure or letter written in the opening of the radical sign indicates what root of the number is sought.

It is called the **Index** of the root.

When no index is written, the second, or square root is meant.

$\sqrt[3]{8}$ indicates that the third, or cube root of 8 is sought.

$\sqrt{ax}$ and $\sqrt{a-b}$ indicate the square roots of ax and $a-b$, respectively.

The horizontal line used in connection with the radical sign is a vinculum.

ALGEBRAIC EXPRESSIONS

28. A number expressed by algebraic symbols is called an **Algebraic Expression.**

29. When signs of operation are employed in algebraic expressions, the sequence of operations is determined by the following conventional law:

A series of additions and subtractions or of multiplications and divisions are performed in order from left to right.

$$3 + 4 - 2 + 3 = 7 - 2 + 3 = 5 + 3 = 8.$$

$$3 \times 4 \div 2 \times 3 = 12 \div 2 \times 3 = 6 \times 3 = 18.$$

$a + b - c + d$ indicates that b is to be added to a, then from this result c is to be subtracted, and to the result just obtained d is to be added.

30. When a particular number takes the place of a letter or general number, the process is called **Substitution.**

Numerical Substitutions

1. When $a = 2$, $b = 3$, and $c = 5$, what are the numerical values of $3c$, c^3, $\sqrt{8ab^2}$, $a^2 + b^2$, and $(a + b)^2$, respectively?

Solutions

$c = 3 \cdot 5 = 15.$

$c^3 = 5 \cdot 5 \cdot 5 = 125.$

$\sqrt{8ab^2} = \sqrt{8 \cdot 2 \cdot 3 \cdot 3} = \sqrt{2 \cdot 2 \times 2 \cdot 2 \times 3 \cdot 3} = 2 \times 2 \times 3 = 12.$

$a^2 + b^2 = 2 \cdot 2 + 3 \cdot 3 = 4 + 9 = 13.$

$(a + b)^2 = (a + b)(a + b) = (2 + 3)(2 + 3) = 5 \cdot 5 = 25.$

Find the numerical value of each of the following algebraic expressions, when $a = 5$, $b = 3$, $c = 10$, $m = 4$, $n = 1$:

2. $10a$.
3. $2ab$.
4. $3cm$.
5. $6bc$.
6. $5cm^2$.
7. $2a^2b$.
8. $3bm^2$.
9. $3a^3b$.
10. am^4.
11. $(ab)^2$.
12. a^2b^2.
13. $\sqrt{2acn}$.
14. $3b^2cn^2$.
15. $a^2 - b^2$.
16. $(a - b)^2$.
17. $(n + 1)^5$.
18. $n^5 + 1$.
19. $\sqrt[3]{4ac^2m}$.
20. $\dfrac{c + 2m}{c - 2m}$.
21. $c + \dfrac{2m}{c - 2m}$.
22. a^bc.
23. m^{a-b}.
24. $(bm)^{a-b}$.

31. An algebraic expression whose parts are not separated by $+$ or $-$ is called a **Term**; as $2x^2$, $-5xyz$, and $\dfrac{xy}{z}$.

In the expression $2x^2 - 5xyz + \dfrac{xy}{z}$ there are three terms.

The expression $m(a + b)$ is a term, the parts being m and $(a + b)$.

32. Terms that contain the same letters with the same exponents are called **Similar Terms.**

$3x^2$ and $12x^2$ are similar terms; also $3(a + b)^2$ and $12(a + b)^2$; also ax and bx, regarding a and b as the coefficients of x.

33. Terms that contain different letters, or the same letters with different exponents, are called **Dissimilar Terms.**

$5a$ and $3by$ are dissimilar terms; also $3a^2b$ and $3ab^2$.

34. Each literal factor of a term is called a **Dimension** of the term.

The number of literal factors or dimensions of a term indicates its *Degree.*

$abcd$ is a term of the fourth degree, because it is composed of four literal factors, or has four dimensions. x^3 is a term of the third degree, since x^3 is a convenient way of indicating that x is taken three times as a factor. The expressions $4x^2yz^3$ and $5xyz^4$ are each of the sixth degree.

35. The term of highest degree in an expression determines the **Degree of the Expression.**

x^3+3x^2+x+2 and $abc+b^2c+ac-b$ are expressions of the third degree.

36. When all the terms of an expression are of the same degree, the expression is called a **Homogeneous Expression.**

$x^3+3x^2y+xy^2+2y^3$ and $abc+b^2c+ac^2$ are each homogeneous expressions.

37. An algebraic expression of one term only is called a **Monomial,** or a **Simple Expression.**

xy and $3ab$ are monomials.

38. An algebraic expression of more than one term is called a **Polynomial,** or a **Compound Expression.**

$3a+2b$, $xy+yz+zx$, and $a^2+b^2-c^2+2ab$ are polynomials.

39. A polynomial of two terms is called a **Binomial.**

$3a+2b$ and x^2-y^2 are binomials.

40. A polynomial of three terms is called a **Trinomial.**

$a+b+c$ and $3x-2y-z$ are trinomials.

41. An expression, any term of which is a fraction, is called a **Fractional Expression.**

$\frac{2x^2}{a^2}-3x+\frac{a}{x}$ is a fractional expression.

42. An expression that contains no fraction is called an **Integral Expression.**

$5a^2 - 2a$ and $6x$ are integral expressions.

Expressions like $x^3 + \frac{3}{4}x^2 + \frac{1}{2}x + 1$ are sometimes regarded as integral, since the literal numbers are not in fractional form.

43. An expression that can be written without using a root sign is called a **Rational Expression.**

1, 2, 3, ..., $a + \frac{1}{2}$, $\frac{x^2}{x - y}$, and $(a - b)^2$ are rational expressions.

$\sqrt{25}$ is rational, since it can be written 5 without a root sign.

44. An expression that cannot be written without using a root sign is called an **Irrational Expression.**

$a + \sqrt{b}$, $a + 2\sqrt{a} + 1$, and $\sqrt[3]{4}$ are irrational expressions.

$\sqrt{a^2}$ is not irrational, however, since it may be written a.

POSITIVE AND NEGATIVE NUMBERS

45. For convenience, arithmetical numbers may be arranged in an ascending scale:

0, 1, 2, 3, 4, 5, ...

The operations of addition and subtraction are thus reduced to counting along a scale of numbers. 2 is added to 3 by beginning at 3 in the scale and counting 2 units in the ascending, or additive direction; and consequently, 2 is subtracted from 3 by beginning at 3 and counting 2 units in the descending, or subtractive direction. In the same way 3 is subtracted from 3. But if we attempt to subtract 4 from 3, we discover that the operation of subtraction is restricted in arithmetic, inasmuch as a greater number cannot be subtracted from a less. If this restriction held in algebra, it would be impossible to subtract one literal number from another without taking into account their arithmetical values. Therefore, this restriction must be removed in order to proceed with the discussion of numbers.

To subtract 4 from 3 we begin at 3 and count 4 units in the descending direction, arriving at 1 on the opposite, or subtractive side of 0. It now becomes necessary to extend the scale 1 unit in the subtractive direction from 0.

To subtract 5 from 3 we begin at 3 and count 5 units in the descending direction, arriving at 2 on the opposite, or subtractive side of 0. The scale is again extended, and may be extended indefinitely in the subtractive direction in a similar way.

For convenience, numbers on opposite sides of 0 are distinguished by means of the small signs $^+$ and $^-$, called *signs of quality*, or *direction signs*, $^+$ being prefixed to those which stand in the additive direction from 0 and $^-$ to those which stand in the subtractive direction from 0.

The former are called **Positive Numbers**, the latter **Negative Numbers.**

Hence, the scale of algebraic numbers may be written:

46. By repeating $^+1$ as a unit any positive number may be obtained, and by repeating $^-1$ as a unit any negative number may be obtained. Hence, positive numbers are measured by the **positive unit**, $^+1$, and negative numbers by the **negative unit**, $^-1$, or by parts of these units.

47. If $^+1$ and $^-1$, or $^+2$ and $^-2$, or any two numbers numerically equal but opposite in quality are taken together, they cancel each other. For counting any number of units from 0 in either direction and then counting an equal number of units from the result in the opposite direction, we arrive at 0. Hence,

If a positive and a negative number are united into one number, any number of units or parts of units of one cancels an equal number of units or parts of units of the other.

48. Two concrete quantities of the same kind are sometimes opposed to each other in some sense so that, if united, any number of units of one cancels an equal number of units of the other. For convenience, such quantities are often distinguished as *positive* and *negative.*

If money *gained* is *positive*, money *lost* is *negative*, for any sum gained is canceled by an equal sum lost. If a *rise* in temperature is *positive*, a *fall* in temperature is *negative*. If distances *north* or *west* or *upstream* are *positive*, distances *south* or *east* or *downstream* are *negative.*

ADDITION

49. 1. If a man has 10 dollars in one pocket and 15 dollars in another, how much money has he?

2. If in algebra money in hand is considered a positive quantity, indicate his financial condition algebraically. What is the sum of 10 positive units and 15 positive units, that is, of $+10$ and $+15$? of $+4$ and $+8$? of $+a$ and $+b$?

3. If a person owes one man 10 dollars and another 15 dollars, how much does he owe both? Indicate his financial condition algebraically, regarding a debt as a negative quantity.

4. What is the sum of 10 negative units and 15 negative units, that is, of -10 and -15? of -6 and -14? of $-a$ and $-b$?

5. What sign has the sum of two algebraic numbers that have like signs?

6. If a man has 25 dollars and owes 15 dollars, how much of his money will be required to cancel the debt? How many dollars will he have after settlement?

7. What is the result when -15 is united with $+25$, that is, what is the *algebraic sum* of -15 and $+25$? of -20 and $+10$? of $+8$ and -3? of $+6$ and -10?

50. The aggregate value of two or more algebraic numbers is called their **Algebraic Sum.**

The process of finding the simplest expression for the algebraic sum of two or more numbers is called **Addition.**

51. Principles. — 1. *The algebraic sum of two numbers with like signs is equal to the sum of their absolute values with the common sign prefixed.*

2. *The algebraic sum of two numbers with unlike signs is equal to the difference between their absolute values with the sign of the numerically greater prefixed.*

By successive applications of the above principles any number of numbers may be added.

Only similar terms can be united into a single term.

Principle 1 may be established as follows:

The sum of 5 positive units and 3 positive units is evidently $(5 + 3)$ positive units, or 8 positive units; that is,

$$^{+}5 + {}^{+}3 = {}^{+}(5 + 3) = {}^{+}8.$$

Similarly, whatever absolute values a and b represent, since a times the unit $^{+}1$ plus b times the unit $^{+}1$ is equal to $(a + b)$ times the unit $^{+}1$,

§ 46, $$^{+}a + {}^{+}b = {}^{+}(a + b).$$

Again, the sum of 5 negative units and 3 negative units is $(5 + 3)$ negative units, or 8 negative units; that is,

$$^{-}5 + {}^{-}3 = {}^{-}(5 + 3) = {}^{-}8.$$

Similarly, whatever absolute values a and b represent, since a times the unit $^{-}1$ plus b times the unit $^{-}1$ is equal to $(a + b)$ times the unit 1,

§ 46, $$^{-}a + {}^{-}b = {}^{-}(a + b).$$

Principle 2 may be established as follows:

The sum of 5 positive units and 3 negative units is 2 positive units, since, § 47, the 3 negative units cancel 3 of the positive units and leave 2 positive units; that is,

$$^{+}5 + {}^{-}3 = {}^{+}(5 - 3) = {}^{+}2.$$

The sum of 5 positive units and 7 negative units is 2 negative units, since, § 47, the 5 positive units cancel 5 of the negative units and leave 2 negative units; that is,

$$^{+}5 + {}^{-}7 = {}^{-}(7 - 5) = {}^{-}2.$$

Similarly, whatever absolute values a and b represent,

if $a > b$, $$^{+}a + {}^{-}b = {}^{+}(a - b),$$

for, § 47, the b negative units will cancel b of the a positive units and leave $(a - b)$ positive units;

but if $b > a$, $$^{+}a + {}^{-}b = {}^{-}(b - a),$$

for, § 47, the a positive units will cancel a of the b negative units and leave $(b - a)$ negative units.

Examples

Find the value of

1. $^{+}7 + {}^{+}3$.
2. $^{-}7 + {}^{-}3$.
3. $^{+}7 + {}^{-}3$.
4. $^{-}7 + {}^{+}3$.
5. $^{-}3 + {}^{+}4 + {}^{-}2 + {}^{+}8 + {}^{-}9$.
6. $^{+}m + {}^{-}n$, if $m > n$.

52. To conform with the ideas already presented, the terms 'greater' and 'less' must be interpreted as follows:

An algebraic number is increased, or made *greater*, when a positive number is added to it, and decreased, or made *less*, when a negative number is added to it.

Since, by § 51, $^{-}3 + {}^{+}1 = {}^{-}2$, $^{-}2 + {}^{+}1 = {}^{-}1$, $^{-}1 + {}^{+}1 = 0$, $^{+}1 + {}^{+}1 = {}^{+}2$, etc., in the scale of algebraic numbers

$$\cdots,\ ^{-}5,\ ^{-}4,\ ^{-}3,\ ^{-}2,\ ^{-}1,\ 0,\ ^{+}1,\ ^{+}2,\ ^{+}3,\ ^{+}4,\ ^{+}5,\ \cdots,$$

each number is greater than the number on its left and less than the number on its right; that is,

$$\cdots,\ ^{-}3 < ^{-}2,\ ^{-}2 < ^{-}1,\ ^{-}1 < 0,\ 0 < ^{+}1,\ ^{+}1 < ^{+}2,\ ^{+}2 < ^{+}3,\ \cdots.$$

NOTE. $^{-}3 < 2$ may be read '$^{-}3$ is less than $^{-}2$' or '$^{-}2$ is greater than $^{-}3$.'

Hence, it follows that:

1. *Any positive number is greater than zero and any negative number is less than zero.*

2. *Of two positive numbers that which has the greater absolute value is the greater, and of two negative numbers that which has the less absolute value is the greater.*

53. Abbreviated notation for addition.

Referring to the scale of algebraic numbers, it is evident that adding positive units to any number is equivalent to counting them in the positive direction from that number, and adding negative units to any number is equivalent to counting them in the negative direction from that number. Hence, in addition, the signs + and − denoting quality have primarily the same meanings as the signs + and − denoting arithmetical addition and subtraction. For example, by the definition of positive and negative numbers,

$^{+}1$ means $0 + 1$ and $^{-}1$ means $0 - 1$;

also $^{+}5$ means $0 + 5$ and $^{-}5$ means $0 - 5$; etc.

Hence, in addition, but one set of signs, + and −, is necessary, and in finding the sum of any given numbers, the signs + and − may be regarded either as signs of quality or as signs of operation, though it is commonly preferable to regard them as signs of operation.

For brevity, it is customary to omit the sign + before a monomial or before the first term of a polynomial. But the sign − cannot be omitted.

$^{+}5 + {}^{+}3 + {}^{-}6$ is written $5 + 3 - 6$; $^{-}4 + {}^{+}8 + {}^{-}2$ is written $-4 + 8 - 2$.

When there is need of distinguishing between the signs of quality + and − and the signs of operation + and −, the numbers and their signs of quality may be inclosed in parentheses.

Thus, if $a = +5$, $b = -3$, and $c = -2$, then $a + b + c = (+5) + (-3) + (-2)$; $a - b - c = (+5) - (-3) - (-2)$; $abc = (+5)(-3)(-2)$; etc.

54. A term preceded by +, expressed or understood, is called a **Positive Term**, and a term preceded by −, a **Negative Term**.

Thus, in the polynomial $3a + 2b - 5c$ the first and second terms are positive and the third term is negative.

Examples

Write the following with one set of signs:

1. $^{+}7 + {}^{+}8$.
2. $^{+}6 + {}^{-}5$.
3. $^{-}3 + {}^{-}7$.
4. $^{+}10 + {}^{-}2 + {}^{-}4$.
5. $^{-}6 + {}^{-}3 + {}^{+}16$.
6. $^{+}8 + {}^{+}4 + {}^{-}5$.
7. $^{+}a + {}^{-}b$.
8. $^{-}a + {}^{+}b + {}^{-}c$.
9. $^{-}x + {}^{-}y + {}^{-}z$.

55. 1. How does $5 + 3 - 2$ compare in value with $5 - 2 + 3$, or with $3 - 2 + 5$, or with $-2 + 3 + 5$?

2. How does $a + b - c$ compare in value with $b - c + a$, or with $b + a - c$, or with $a - c + b$?

3. In what order may numbers be added?

Law of Order, or Commutative Law for Addition. — *Algebraic numbers may be added in any order.*

The Law of Order may be established as follows:

We know from arithmetic that arithmetical numbers may be added in any order. Since, § 51, Prin. 1, algebraic numbers having like signs are added by prefixing their common sign to the sum of their absolute, or arithmetical values, and since in finding this sum the absolute values may be added in any order, it follows that algebraic numbers having like signs may be added in any order.

If some of the numbers are positive and some are negative, § 47, the same number of positive and negative units will cancel each other, and the same number of one or the other will be left, in whatever order the numbers are added.

Hence, whether the numbers have like or unlike signs, they may be added in any order; that is,

$$a + b + c = b + c + a = c + a + b = c + b + a, \text{ etc.},$$

for all values of a, b, and c.

56. 1. How are the numbers 4, $\frac{1}{5}$, 2, and $\frac{3}{5}$ grouped in adding? the numbers 25 and 32, or $20 + 5$ and $30 + 2$?

2. In what manner may the terms of an expression be grouped in addition?

Law of Grouping, or Associative Law for Addition. — *The sum of three or more algebraic numbers is the same in whatever manner the numbers are grouped.*

The Law of Grouping may be established as follows:

By the Law of Order, $a + b + c = b + c + a$

§ 29, $= (b + c) + a$

by the Law of Order, $= a + (b + c)$.

Other cases, as $a + b + c = (a + c) + b$, etc., may be proved similarly. Hence, for all values of a, b, and c,

$$a + b + c = a + (b + c) = (a + c) + b = c + (a + b), \text{ etc.}$$

57. To add similar monomials.

EXAMPLES

1. Add $4\,a$ and $3\,a$.

PROCESS

$$\begin{array}{r} 4\,a \\ 3\,a \\ \hline 7\,a \end{array}$$

EXPLANATION. — Just as $4 = 1 + 1 + 1 + 1$, so $4\,a = a + a + a + a$; just as $3 = 1 + 1 + 1$, so $3\,a = a + a + a$. Therefore, $4\,a + 3\,a = a + a + a + a + a + a + a$, the symbol for which is $7\,a$.

Or, the sum may be obtained by adding the numerical coefficients and annexing to their sum the common literal part.

2. Add $4\,a$, $\frac{3}{2}\,a$, $-3\,a$, and $\frac{1}{2}\,a$.

PROCESS

$$4\,a + \tfrac{3}{2}\,a - 3\,a + \tfrac{1}{2}\,a = 4\,a - 3\,a + (\tfrac{3}{2}\,a + \tfrac{1}{2}\,a) = a + 2\,a = 3\,a.$$

EXPLANATION. — By the Law of Grouping the sum of $\frac{3}{2}\,a$ and $\frac{1}{2}\,a$ may be added to the sum of $4\,a$ and $-3\,a$. Just as $4 = 1 + 1 + 1 + 1$, so $4\,a = a + a + a + a$; just as $-3 = -1 - 1 - 1$, so $-3\,a = -a - a - a$. Therefore, $4\,a - 3\,a = a + a + a + a - a - a - a =$ (by the Law of Order) $a - a + a - a + a - a + a = 0 + a = a$. Just as $\frac{3}{2} = \frac{1}{2} + \frac{1}{2} + \frac{1}{2}$, so $\frac{3}{2}\,a = \frac{1}{2}\,a + \frac{1}{2}\,a + \frac{1}{2}\,a$. Therefore, $\frac{3}{2}\,a + \frac{1}{2}\,a = \frac{1}{2}\,a + \frac{1}{2}\,a + \frac{1}{2}\,a + \frac{1}{2}\,a = \frac{4}{2}\,a = 2\,a$. Adding the two groups, $a + 2\,a = a + a + a = 3\,a$.

Or, the sum may be obtained by adding in any order or manner the numerical coefficients, and annexing to their sum the common literal part.

Simplify the following:

3. $2y - 7y - 5y - y + 10y - 6y + 8y.$

4. $5a - 3a + 8a - 10a - 5a - 11a + 24a.$

5. $3by - 5by - 10by - 14by + 48by.$

6. $8a^3b + 6a^3b - 11a^3b - 2a^3b + 9a^3b.$

7. $1\frac{4}{5}x^2y^2 - \frac{1}{2}x^2y^2 - 1\frac{7}{10}x^2y^2 + 3\frac{1}{2}x^2y^2 + x^2y^2.$

8. $5(xy)^2 - 3(xy)^2 - 15(xy)^2 + 4(xy)^2 + 13(xy)^2.$

9. $(a - x) + 5(a - x) + 7(a - x) - 3(a - x) - 2(a - x).$

10. $3(a + b)^2 + 6(a + b)^2 - 10(a + b)^2 - (a + b)^2 + 12(a + b)^2.$

11. $20\sqrt{x - 3} - 8\sqrt{x - 3} - 12\sqrt{x - 3} + \sqrt{x - 3} + 7\sqrt{x - 3}.$

12. $3x(x^2 - 2x + 3) - x(x^2 - 2x + 3) + 2x(x^2 - 2x + 3).$

13. $2(x - 1) - 13(x - 1) + 5(x - 1) + 10(x - 1) + 6(x - 1).$

14. $\frac{1}{2}(a + b - c) - \frac{4}{5}(a + b - c) + \frac{11}{20}(a + b - c).$

Since only similar terms can be united into a single term, in algebra dissimilar terms are considered to have been added when they have been written in succession with their proper signs.

In algebra many indicated operations are regarded as performed.

Since $5a$, $-3b$, and $2c$ cannot be united into a single term, their sum is written $5a - 3b + 2c$.

15. Add $6a$, $-5b$, $-3a$, $3b$, $2c$, and $-a$.

SOLUTION. $6a - 5b - 3a + 3b + 2c - a = 2a - 2b + 2c.$

Add the following:

16. $2xy$, $4ab$, $3xy$, and ab.

17. mn, $-3cd$, $-6mn$, and $4cd$.

18. a, $-b$, $2c$, $-2a$, $3b$, and $-4c$.

19. $6x$, $3y$, $-2x$, y, $-3x$, z, and $-3y$.

20. $2a$, $2b$, $2c$, $2d$, $-a$, $-3b$, $-c$, and $-3d$.

21. a, $-4a$, $2b$, cd, $-2ab$, $5b$, and $-3cd$.

58. To add polynomials.

EXAMPLES

1. Add $3a-3b+5c$, $-3a+2b$, and $c-4b+2a$.

PROCESS

$$\begin{array}{r} 3a-3b+5c \\ -3a+2b \\ 2a-4b+c \\ \hline 2a-5b+6c \end{array}$$

EXPLANATION. — For convenience in adding, similar terms are written in the same column.

The algebraic sum of the first column is $2a$, of the second $-5b$, and of the third $+6c$; and these numbers written in succession express in its simplest form the sum sought.

2. Simplify $11a^2b-7ab^2+2ac^2+10ab-4ac^2+5a^2b-4ab^2+5ac^2+b^3+9ab^2-7a^2b-2b^3+2ab^2-8ab-6a^2b$.

PROCESS

$$\begin{array}{rrrrr} 11a^2b & -7ab^2 & +2ac^2 & +10ab & +b^3 \\ +5a^2b & -4ab^2 & -4ac^2 & & -2b^3 \\ -7a^2b & +9ab^2 & +5ac^2 & & \\ -6a^2b & +2ab^2 & & -8ab & \\ \hline 3a^2b & & +3ac^2 & +2ab & -b^3 \end{array}$$

RULE. — *Arrange the terms so that similar terms stand in the same column.*

Find the algebraic sum of each column, and write the results in succession with their proper signs.

3. Add $2a-3b$, $2b-3c$, $5c-4a$, $10a-5b$, and $7b-3c$.

4. Add $x+y+z$, $x-y+z$, $y-z-x$, $z-x-y$, and $x-z$.

Simplify the following polynomials:

5. $7x-11y+4z-7z+11x-4y+7y-11z-4x+y-x-z$.

6. $a+3b+5c-6a+d+4b-2c-2b+5a-d+a-b$.

7. $4x^2-3xy+5y^2+10xy-17y^2-11x^2-5xy+12x^2-2xy$.

8. $2xy-5y^2+x^2y^2-7xy+3y^2-4x^2y^2+5xy+4y^2+x^2y^2$.

9. $2ay-3ac-4ay+4ac-6ay+5ac+11ay-4ac-ay$.

10. $5am - 3a^2m^2 + 4 - 4am + a^2m^2 - 2 + 5 + a^2m^2 - 6 + 3am.$

11. $6\sqrt{x} - 5\sqrt{xy} + 3\sqrt{y} - 4\sqrt{x} + 6\sqrt{xy} - \sqrt{x} - \sqrt{y} + 3\sqrt{y} - 2\sqrt{xy}.$

Add the following polynomials:

12. $7a - 3b + 5c - 10d$, $2b + d - 3c - 4e$, $5c - 6a + 2d - 4e$, $8b - 7a - 8c - e$, $a - 5c + 5d + 11e$, $a - b + c + 2d + e$, and $5a - 4b + 2c$.

13. $5x - 3y - 2z$, $4y - 2x + 6z$, $3a - 2x - 4y$, $4b - 2z - 5y$, $a - 5b$, $5y - 6x$, $8x + 2y - 5a - 2b$, and $6x - y - 2z + 4b$.

14. $m + n - \sqrt{mn}$, $\sqrt{mn} - 2m - 3n$, $3m + 2n$, $4n - \sqrt{mn} - 3m$, $5\sqrt{mn} - n$, $4m - n - 2\sqrt{mn}$, $5n + 2m - 3\sqrt{mn}$, and $n - 6m$.

15. $2c - 7d + 6n$, $11m - 3c - 5n$, $7n - 2d - 8c$, $8d - 3m + 10c$, $4d - 3n - 8m$, $m - 6n$, and $2m - 3d$.

16. $4x^3 - 2x^2 - 7x + 1$, $x^3 + 3x^2 + 5x - 6$, $4x^2 - 8x^3 + 2 - 6x$, $2x^3 - 2x^2 + 8x + 4$, and $2x^3 - 3x^2 - 2x + 1$.

17. $a^5 + 5a^4b + 5ab^4 + b^5$, $a^4b - 2a^5 + a^3b^2 - 2b^5$, $a^3b^2 - 3a^2b^3 - 4a^4b - a^5$, and $2a^5 + a^4b - 2a^3b^2 + 2a^2b^3 - 3ab^4 + b^5$.

18. $a^4 - 2a^3b + 3a^2b^2$, $3ab^3 - 4b^4 - 2a^2b^2$, $3a^3b + 4a^4 - 3ab^3 + 4b^4$, $5a^3b + 7a^2b^2 - 4ab^3 - 8b^4$, and $a^4 - 6a^3b - 8a^2b^2$.

19. $5x^6 - x^3 + 7x - 9$, $4x^5 - 3x^6 + 6x^2 + 12$, $x^6 - 5x^5 - x - 7$, $4 - x^2 - x^6$, $4x^4 - 10x^2 + 3x^6 + 4$, and $x^6 + x^3 - 3x^2 - 4x - 5$.

20. $3(a + b) + 6(b + c)$, $5(a + b) - 10(b + c)$, $2(a + b) + (b + c)$, $3(b + c) - (a + b)$, $2(b + c) - 10(a + b)$, and $3(a + b) - 3(b + c)$.

21. $x + 3(a + 1) - y$, $-(a + 1) - 2x + 4y$, and $3x - 4(a + 1)$.

22. $a^3 - 3a^2bc - 6ab^2c$, $a^2b - b^3 - c^3 - 3abc$, $ab^2 + b^2c + bc^2$, $5a^2bc + 4ab^2c + c^3$, $b^3 - a^2b - ab^2$, $a^3 + b^2c + bc^2$, and $2ab^2c - 2bc^2$.

23. $.12x^3 - 4x^2 + x + 2$, $.4x^2 - 4x + .4 - x^3$, $3\frac{1}{2}x - .6 + 3x^2 + 2x^3$, and $1 - \frac{1}{2}x + 1.2x^2 + \frac{2}{2\,5}x^3$.

24. $ax - \frac{3}{2}ax^2 - \frac{1}{4}ax^3$, $\frac{3}{5}ax^3 - \frac{1}{2}ax^2 - \frac{1}{6}bxy$, $\frac{1}{2}bxy - \frac{3}{4}ax^3 - \frac{7}{6}ab$, $\frac{2}{3}bxy - \frac{5}{6}ab + \frac{7}{2}ax$, and $2ab - \frac{3}{2}ax + \frac{5}{4}ax^2$.

Exercises

59. 1. If a boy has n marbles and buys 10, how many will he then have? If he gives away m of these, how many will be left?

2. Mary has 25 cents. How many cents will she have after spending 10 cents and earning a cents? If she has c cents, spends b cents, and earns a cents, how many cents will she have?

3. A boy who has p marbles loses q marbles, and then buys r marbles. How many does he then have?

4. James is 15 years old. In how many years will he be 21 years old? In how many years will he be x years old? Harry is y years old. How many years older is he than James? In how many years will Harry be x years old?

5. Edith is 14 years old. How old was she 4 years ago? a years ago? How old will she be 3 years hence? b years hence?

6. William is x years old. How old was he a year ago? How old will he be in 5 years? in a years? After how many years will he be 21 years old? m years old? How old will he be when he is twice as old as he is now?

7. In a certain family there are five children each of whom is 2 years older than the one next younger. If the youngest is x years old, what are the ages of the others?

8. A woman sold some eggs, and with the money bought 8 pounds of sugar and 5 pounds of coffee. If the sugar cost a cents a pound, and the coffee cost b cents a pound, how much did she receive for the eggs?

9. What two whole numbers are nearest to 50? to x? to $x+5$? If y is an even number, what are the nearest even numbers?

10. George is a years younger than Henry, and b years younger than John. If John is 16 years old, how old is Henry?

11. A man paid two men, whom he owed, in the following manner: To the first he gave an a-dollar bill, and received change amounting to b dollars; and to the second he gave a b-dollar bill, and received change amounting to c dollars. How much did he owe both?

Equations and Problems

60. 1. Simplify the equation $2x - 3x + 6x + 5x - x = 27$, and find the value of x.

Solution

$2x - 3x + 6x + 5x - x = 27.$

Uniting terms, $9x = 27.$

Hence, $x = 3.$

Simplify, and find the value of x:

2. $10x - 7x + 4x - 6x + 11x - 20x + 12x = 40.$

3. $13x - 6x - 4x + 7x + 11x - 16x + 15x = 20.$

4. $25x - 5x - 7x - 2x + 14x - 10x - 12x = 36.$

5. $17x + 2x - 6x + 4x - 12x - 30x + 40x = 75.$

6. $10x + 2x + 3x + 4x + 11x + 12x + 18x = 60.$

7. $16x - 3x - 5x - 8x + 10x + 15x - 15x = 50.$

8. $12x + 10x - 20x + 16x - 3x - 2x + 2x = 75.$

9. $14x - 11x + 26x - 35x - 4x + 7x + 4x = 16.$

10. $75x - 37x - 40x + 10x - 8x - 6x + 9x = 21.$

11. $4x + 10x - 60x + 48x + 12x + 5x + 2x = 63.$

12. $7x + 11x - 13x + 15x - 17x - 3x + 5x = 25.$

13. $5x - 15x + 25x - 30x + 10x + 3x + 6x = 56.$

14. $x + 2x + 3x + 4x + 5x + 6x + 7x + 8x = 144.$

15. $4x + 12x - 17x - 10x + 15x + x + 15x = 400.$

16. $3x + 10x - 20x - 4x + 12x + 3x + 11x = 300.$

Solve the following problems:

17. A man bequeathed $10,000 to 3 sons and 4 daughters, so that a son received twice as much as a daughter. What was the share of each daughter, and of each son?

18. John had twice as many marbles as Henry, and $\frac{1}{3}$ as many as Charles. If they had 225 marbles in all, how many had each?

19. A had twice as much money as B, who had 3 times as much money as C. If all together had \$ 2000, how much money had each?

20. A merchant owes A a certain sum of money, B $\frac{1}{3}$ as much, and C twice as much as A. Various persons owe him in all 12 times as much as he owes B. If all these debts were paid, he would have \$ 10,000. What are the amounts he owes?

21. Mr. Jones succeeded in doubling his capital once every 5 years. If his capital at the end of 20 years was \$ 150,000, with what capital did he begin?

22. The distance around a rectangular field 4 times as long as it is wide is 200 rods. What are the dimensions of the field?

23. What are the dimensions of a rectangular field whose length is twice its width, if 240 rods of fence are required to inclose it?

24. Two boys caught the same number of fish, another caught 10 more, and another 10 less. If they caught in all 120 fish, how many did each catch?

25. The sum of 3 consecutive whole numbers is 84. What are the numbers?

SUGGESTION. — Let x represent the middle number. Then, the other two numbers will be represented by $x - 1$ and $x + 1$.

26. Of what 3 consecutive even numbers is 150 the sum?

27. A, B, C, and D together have \$ 1500. If A had \$ 50 more and B \$ 50 less, they would each have the same sum as C and $\frac{1}{2}$ as much as D. How much money has each?

28. The ages of 4 brothers differ successively by 2 years. If the sum of their ages is 56 years, what is the age of each?

29. Three newsboys sold 270 papers in an evening. If the second sold 5 less than twice as many as the first, and the third 5 more than 3 times as many as the first, how many papers did each sell?

SUBTRACTION

61. 1. What is left when $5xy$ is taken from $12xy$? What is the sum of $^{-}5xy$ and $^{+}12xy$?

2. What is left when $^{+}3mn$ is subtracted from $^{+}10mn$? What is the sum of $^{-}3mn$ and $^{+}10mn$?

3. Instead of subtracting a positive number, what may be done to obtain the same result?

4. What is the result when $8a$ is subtracted from $10a$? When $(8a - 5a)$ is subtracted from $10a$? How does the second result compare with the first? What effect upon the result has the subtraction of the negative number $^{-}5a$?

5. How does the result of subtracting $(5x - 2x)$ from $12x$ compare with the result of subtracting $5x$ from $12x$? What effect upon the result has the subtraction of the negative number $^{-}2x$?

6. Instead of subtracting a negative number, what may be done to obtain the same result?

62. In addition two numbers are given, and their algebraic sum is required; in subtraction the algebraic sum, called the *minuend*, and one of the numbers, called the *subtrahend*, are given, and the other number, called the *remainder*, or *difference*, is required.

Subtraction is, therefore, the *inverse of addition.*

The **Difference** is the algebraic number that *added to the subtrahend gives the minuend.*

63. Principles. — 1. *Subtracting a positive number is equivalent to adding a numerically equal negative number.*

2. *Subtracting a negative number is equivalent to adding a numerically equal positive number.*

The difference of similar terms, only, can be expressed in one term.

Principle 1 may be established as follows:

Let m represent any minuend and $+s$ any positive subtrahend.

It is to be proved that $m - {}^{+}s = m + {}^{-}s$.

§ 62, to find the remainder when $+s$ is subtracted from m is to find the algebraic number that added to $+s$ will give m.

Since the algebraic sum of $+s$ and $-s$ is 0, by the Associative Law for Addition the algebraic sum of $+s$ and $m + {}^{-}s$ is $m + 0$, or m.

Hence, the algebraic number that added to $+s$ gives m is $m + {}^{-}s$.

$$\therefore\ m - {}^{+}s = m + {}^{-}s.$$

Principle 2 may be established as follows:

Let m represent any minuend and $-s$ any negative subtrahend.

It is to be proved that $m - {}^{-}s = m + {}^{+}s$.

§ 62, to find the remainder when $-s$ is subtracted from m is to find the algebraic number that added to $-s$ will give m.

Since the algebraic sum of $-s$ and $+s$ is 0, by the Associative Law for Addition the algebraic sum of $-s$ and $m + {}^{+}s$ is $m + 0$, or m.

Hence, the algebraic number that added to $-s$ gives m is $m + {}^{+}s$.

$$\therefore\ m - {}^{-}s = m + {}^{+}s.$$

64. Since, from the above principles, subtracting algebraic numbers is equivalent to adding them to the minuend with their signs changed, it follows that the Laws of Order and Grouping for Addition hold in the subtraction of algebraic numbers; and that when one or more subtrahends with their signs changed are added to the minuend to form the algebraic sum called the difference, one set of signs, + and −, suffices to denote either quality or operation.

65. To subtract when the terms are positive.

EXAMPLES

1. From $10\,x$ subtract $4\,x$.

PROCESS

$$\begin{array}{r} 10\,x \\ 4\,x \\ \hline 6\,x \end{array}$$

EXPLANATION. — Since subtracting a positive term is equivalent to adding a numerically equal negative term (1-rin. 1), $4\,x$ may be subtracted from $10\,x$ by changing the sign of $4\,x$, and adding $10\,x$ and $-4\,x$.

2. From $10\,x$ subtract $15\,x$.

PROCESS

$10\,x$
$15\,x$
$-$
$-\ 5\,x$

EXPLANATION. — Since subtracting a positive term is equivalent to adding a numerically equal negative term (Prin. 1), $15\,x$ may be subtracted from $10\,x$ by changing the sign of $15\,x$ and adding $10\,x$ and $-15\,x$.

	3.	4.	5.	6.	7.	8.
From	$12\,a$	$9\,am$	$8\,x^2y^2$	$24\,mn^2$	$6\sqrt{ax}$	$11\,(a+b)$
Take	$5\,a$	$21\,am$	$18\,x^2y^2$	$12\,mn^2$	$15\sqrt{ax}$	$21\,(a+b)$

	9.	10.	11.	12.
From	$9\,a+7\,b$	$5\,a+10\,b$	$10\,x+2\,y$	$3\,m+3\,n$
Take	$2\,a+3\,b$	$7\,a+4\,b$	$6\,x+4\,y$	$2\,m+5\,n$

	13.	14.	15.	16.
From	$15\,m+n$	$7\,x+2\,y$	$4\,x+4\,y$	$8\,p+3\,q$
Take	$12\,m+2\,n$	$4\,x+4\,y$	$7\,x+2\,y$	$10\,p+2\,q$

17. From $8\,p+3\,z$ subtract $10\,p+z$.

18. From $15\,m+n$ subtract $5\,m+3\,n$.

19. From $3\,ax+5\,by$ subtract $4\,ax+6\,by$.

20. From $8\,abc+19\,mx$ subtract $20\,abc+7\,mx$.

21. From $a+3\,b+c$ subtract $a+b+3\,c$.

22. From $12\,a^2+2\,b^2+14\,c^2$ subtract $3\,a^2+13\,b^2+3\,c^2$.

23. From $6\,ax+by+7\,cz$ subtract $2\,ax+by+2\,cz$.

24. From $7\,ax+by+2\,cz$ subtract $4\,ax+3\,by+cz$.

25. From $4\,ab+c$ subtract $a^2+b^2+abc+2\,ab+2\,c$.

26. From $5\,xy$ subtract $x^3+2\,x^2y+2\,xy^2+3\,xy+y^3$.

27. From 1 subtract $x^4+13\,x^3+15\,x^2+16\,x+25$.

28. From $7\,x^2-4\,y^2$ subtract $6\,x^2+3\,xy-6\,y^2$.

66. To subtract when some terms are negative.

EXAMPLES

1. From $8x - 3y$ subtract $5x - 7y$.

PROCESS	EXPLANATION. — Since subtracting a positive term is equivalent to adding a numerically equal negative term, subtracting $5x$ from $8x$ is equivalent to adding $-5x$ to $8x$ (Prin. 1). Since subtracting a negative term is equivalent to adding a numerically equal positive term, subtracting $-7y$ from $-3y$ is equivalent to adding $+7y$ to $-3y$ (Prin. 2).
$8x - 3y$	
$5x - 7y$	
$- \quad +$	
$3x + 4y$	

RULE. — *Change the sign of each term of the subtrahend, or conceive it to be changed, and add the result to the minuend.*

	2.	3.	4.	5.	6.
From	$5a$	$6xy$	$-9mn$	$-13\sqrt{x}$	$-3(a+b)$
Take	$-2a$	$-3xy$	$-4mn$	$-5\sqrt{x}$	$-10(a+b)$

	7.	8.	9.
From	$4m - 3n + 2p$	$8a - 10b + c$	$3x + 2y - z$
Take	$2m - 5n - p$	$6a - 5b - c$	$5x - 4y - z$

	10.	11.	12.
From	$a - b + c$	$8a^2b - 5ac^2 + 9a^2c$	$r - s + t$
Take	$2a + b - c$	$3a^2b + 2ac^2 + 9a^2c$	$r + s - t$

13. From $5x - 3y + z$ take $2x - y + 8z$.

14. From $3a^2b + b^3 - a^3$ take $4a^2b - 8a^3 + 2b^3$.

15. From $13a^2 + 5b^2 - 4c^2$ take $8a^2 + 9b^2 + 10c^2$.

16. From $15x - 3y + 2z$ subtract $3x + 8y - 9z$.

17. From $a^2 - ab - b^2$ subtract $ab - 2a^2 - 2b^2$.

18. From $m^2 - mn + n^2$ subtract $2m^2 - 3mn + 2n^2$.

19. From $5x^2 - 2xy - y^2$ subtract $2x^2 + 2xy - 3y^2$.

20. From $2ax - by - 5xy$ subtract $2by - 2ax - 3xy$.

21. From $2a+c$ subtract $a-b+c$.

22. From $2m+n$ subtract $n-2p$.

23. From $x+y$ subtract $3a-4+y$.

24. From $2x^2+2xy$ subtract x^2-xy-y^2.

25. From $2a-2d$ subtract $a-b+c-d$.

26. From $2b$ subtract $b-a-c-d$.

27. From a^3+x^3 subtract $a^3-3a^2x+3ax^2-x^3$.

28. From a^4+1 subtract $1-a+a^2-a^3+a^4$.

29. From the sum of $3a^2-2ab-b^2$ and $3ab-2a^2$ subtract a^2-ab-b^2.

30. From $3x-y+z$ subtract the sum of $x-4y+z$ and $2x+3y-2z$.

31. From $a+b+c$ subtract the sum of $a-b-c$, $b-c-a$, and $c-a-b$.

32. Subtract the sum of m^2n-2mn^2 and $2m^2n-m^3-n^3+2mn^2$ from m^3-n^3.

33. Subtract the sum of $2c-9a-3b$ and $3b-5a-5c$ from $b-3c+a$.

34. From $3bx+4ay$ subtract the sum of $3ay-4bx$ and $bx+ay$.

35. From the sum of $1+x$ and $1-x^2$ subtract $1-x+x^2-x^3$.

36. From $\frac{2}{3}x^3-\frac{2}{5}x^2+3x-7$ subtract $\frac{1}{2}x^3-\frac{4}{5}x^2+\frac{5}{2}x-10$.

37. From $\frac{1}{8}m^3-\frac{1}{4}m^2n+\frac{1}{3}mn^2-\frac{8}{27}n^3$ subtract $n^3-m^3+\frac{1}{3}mn^2-\frac{1}{2}m^2n$.

38. From $5(a+b)-3(x+y)+4(m+n)$ subtract $4(a+b)+2(x+y)+(m+n)$.

39. From n^5-m^5 subtract the sum of $2m^2n^3-3mn^4$ and $m^5+4m^3n^2-2m^2n^3+5mn^4-n^5$.

40. From the sum of $3x^2-2x+1$ and $2x-5$ subtract the sum of $x-x^2+1$ and $2x^2-4x+3$.

PARENTHESES

67. The subtrahend is sometimes written within a sign of aggregation preceded by the sign —.

If $a - b$ is to be subtracted from $2\,a$, it may be written $2\,a - (a - b)$.

1. What change must be made in the signs of the terms of the subtrahend, when it is subtracted from the minuend?

2. When a number *in parenthesis* is preceded by the sign —, what change must be made in the signs of the terms, when the subtraction is performed, or *when the parenthesis is removed?*

68. PRINCIPLES. — 1. *A parenthesis preceded by the minus sign may be removed from an expression, if the signs of all the terms in parenthesis are changed.*

2. *A parenthesis preceded by the minus sign may be used to inclose an expression, if the signs of all the terms to be inclosed are changed.*

1. When numbers are inclosed in a parenthesis preceded by the *plus* sign, the parenthesis may be removed without changing the signs of the terms.

2. Any number of terms may be inclosed in a parenthesis preceded by a *plus* sign without changing the signs of the terms.

3. The student should remember that in an expression like $-(x - y)$, or $-\overline{x - y}$, the sign of x is plus, and the expression is the same as if it were written $-(+\,x - y)$, or $-+\,\overline{x - y}$.

EXAMPLES

Simplify the following:

1. $a + (b - c)$.
2. $a - (b - c)$.
3. $x - (y - z)$.
4. $x - (-\,y + z)$.
5. $m - n - (-\,a)$.
6. $m - (n - 2\,a)$.
7. $5\,x - (2\,x + y)$.
8. $a - b - (c - d)$.
9. $a - b - (-\,c + a)$.
10. $a - m - (n - m)$.
11. $5\,a - 2\,b - (a - 2\,b)$.
12. $a - (b - c + a) - (c - b)$.
13. $2\,xy + 3\,y^2 - (x^2 + xy - y^2)$.
14. $m + (3\,m - n) - (2\,n - m) + n$.

Collect in alphabetical order the coefficients of x and y in the following, giving each parenthesis the sign of the first coefficient to be inclosed therein:

15. $ax - by - 3bx + 2cy - fx - gy.$

PROCESS

$$ax - by - 3bx + 2cy - fx - gy = (a - 3b - f)x - (b - 2c + g)y$$

SUGGESTION. — The coefficient of y is $-b + 2c - g$, which is written $-(b - 2c + g)$ (Prin. 2).

16. $ax - by - bx - cy + dx - ey.$

17. $mx - 2ny + nx - ry - px + qy.$

18. $5ax + 3ay - 2dx + ny - 5x - y.$

19. $cx - 2bx + 7ay + 3ax - lx - ty.$

20. $bx + cy - 2ax + by - cx - dy.$

21. $bx - cy - 2ay + by.$

22. $mx - bx - 4y - my.$

23. $rx - ay - sx + 2cy.$

24. $x^2 + ax - y^2 + ay.$

25. $x^2 - ay - ax - y^2$

Group the same powers of x in the following:

26. $ax^3 + bx^2 - cx + ex^3 - dx^2 - fx.$

27. $x^3 + 3x^2 + 3x - ax^2 - 3ax^3 + bx.$

28. $x^2 - abx - x^3 - bx^2 - cx - mnx^3 + dx.$

29. $ax^4 - x^4 - ax^2 + x^2 + ax - x - abx^3 + x^3.$

30. Simplify $2a - [a - \{b - (3b - \overline{2a - b})\}] - (b - a).$

When an expression contains parentheses within parentheses, they may be removed *in succession*, beginning with either the outermost or the innermost, preferably the innermost.

SOLUTION

$$2a - [a - \{b - (3b - \overline{2a - b})\}] - (b - a)$$

Prin. 1, $= 2a - [a - \{b - (3b - 2a + b)\}] - b + a$

Uniting terms, $= 3a - [a - \{b - (4b - 2a)\}] - b$

Prin. 1, $= 3a - [a - \{b - 4b + 2a\}] - b$

Uniting terms, $= 3a - [a - \{-3b + 2a\}] - b$

Prin. 1, $= 3a - [a + 3b - 2a] - b$

Uniting terms, $= 3a - [-a + 3b] - b$

Prin. 1, $= 3a + a - 3b - b$

Uniting terms, $= 4a - 4b.$

Simplify the following:

31. $4a+b-\{x+4a+b-2y-(x+y)\}$.

32. $ab-\{ab+ac-a-(2a-ac)+(2a-2ac)\}$.

33. $a+[y-\{5+4a-(6y+3)\}-(7y-4a-1)]$.

34. $4m-[p+3n-(m+n)+3-(6p-3n-5m)]$.

35. $a+2b+(14a-5b)-\{6a+6b-(5a-\overline{4a-4b})\}$.

36. $12a-\{[4-3b-(6b+3c)]+b-8-(5a-2b-6)\}$.

37. $a+b-\{-[a+b-(c+x)]-[3a-(c-x+a)-b]+4a\}$.

38. $x^3-[x^2-(1-x)]-\{1+[x^2-(1-x)+x^3]\}$.

39. $4-\{[5y-(3-\overline{2x-2})]-[x+(5y-\overline{x+3})]\}$.

40. $ab-\{5+x-(b+c-ab+x)\}+[x-(b-c-7)]$.

41. $a^2-b^2-\{ad+a^2-(x+a^2-b^2)-b^2\}+5ad-(x+3ad)$.

42. $a-(b-c)-[a-\{b-c-(b+c-a)+(a-b)+(c-a)\}]$.

43. $-\{3ax-[5xy-3z]+z-(4xy+[6z+7ax]+3z)\}$.

44. $1-x-\{1-x-[1-x-(1-x)-(x-1)]-x+1\}$.

45. $1-x-\{1-[x-1+(x-1)-(1-x)-x]+1-x\}$.

46. $x-[-\{-(-x)+x\}-2x]$.

47. $(a-b)-\{-a-(b-a)+(a-b)\}$.

48. $a-7-[-\{-a-(-a-\overline{a-3})\}]$.

49. $a-x-[-\{a+(x-a)-(x-4a)\}]$.

50. $5xy-[-\{(y^2-xy)-(xy-\overline{y^2-2xy})\}]$.

51. $2a-[a-\{b-(3b-\overline{2a-b})\}]-(b-a)$.

52. $a-[-(m-a)-\{a-(m-\overline{2m+6a})\}]$.

53. $a-\{-b-(c-d)\}+a-[-b+\{-2c-(d-e)\}]$.

54. $a^2+5-[2ab-\{-(7-3ab)-\overline{ab+2a^2-z}\}-(3a-z)]$.

55. $2x+(3y-\{2x-[y+4x-(3y-x)]-2y\}-\overline{x-y})$.

56. $1-(-\{-[-(-a-\overline{a-1})-3]-2\}-a)-[a-(a-1)]$.

TRANSPOSITION IN EQUATIONS

69. 1. What number diminished by 2 is equal to 8?

2. If a number increased by 2 is equal to 8, what is the number?

3. In the equation $x - 2 = 8$, what is done with the 2 in obtaining the value of x? In the equation $x = 8 + 2$, how does the sign of 2 compare with its sign in the previous equation?

4. In the equation $x + 2 = 8$, what is done with the 2 in obtaining the value of x? In the equation $x = 8 - 2$, how does the sign of 2 compare with its sign in the previous equation?

5. In changing the 2's from one side of the equation to the other, what change was made in the sign?

6. When a term is changed from one side, or *member* of an equation, to the other, what change must be made in its sign?

7. If 3 is added to one member of the equation $2 + 5 = 7$, what must be done to preserve the equality?

8. If 3 is subtracted from one member of the equation $2 + 8 = 10$, what must be done to preserve the equality?

9. If one member of the equation $2 + 5 = 7$ is multiplied by 5, what must be done to preserve the equality?

10. If one member of the equation $10 + 25 = 35$ is divided by 5, what must be done to preserve the equality?

11. If one member of the equation $x = 5$ is raised to the second power, what must be done to preserve the equality?

12. If the square root of one member of the equation $x^2 = 25$ is taken, what must be done to preserve the equality?

13. What, then, may be done to the members of an equation without destroying the equality?

70. The parts of an equation on each side of the sign of equality are called its *Members*.

The part on the left of the sign of equality is called the *First Member*, and the part on the right, the *Second Member*.

71. The process of changing a term from one member of an equation to the other is called **Transposition.**

72. PRINCIPLE. — *A term may be transposed from one member of an equation to the other, provided its sign is changed.*

73. A truth that does not need demonstration is called an **Axiom.**

74. AXIOMS. — 1. *Things that are equal to the same thing are equal to each other.*

2. *If equals are added to equals, the sums are equal.*
3. *If equals are subtracted from equals, the remainders are equal.*
4. *If equals are multiplied by equals, the products are equal.*
5. *If equals are divided by equals, the quotients are equal.*
6. *The same powers of equal numbers are equal.*
7. *The same roots of equal numbers are equal.*

EQUATIONS AND PROBLEMS

75. 1. If $5x - 2 = 3x + 6$, find the value of x.

PROCESS

$$5x - 2 = 3x + 6$$
$$3x \quad = 3x$$
$$2x - 2 = \quad + 6$$
$$2 = 2$$
$$2x \quad = 8$$
$$\therefore x = 4$$

OR

$$5x - 2 = 3x + 6$$
$$5x - 3x = 2 + 6$$
$$2x = 8$$
$$\therefore x = 4$$

VERIFICATION

$$20 - 2 = 12 + 6$$
$$18 = 18$$

EXPLANATION. — Since the value of x is sought, all terms containing x must be collected in one member of the equation, and the remaining, or known terms in the other member.

$3x$ may be made to disappear from the second member by subtracting $3x$ from both members. The result (Axiom 3) is the equation $2x - 2 = 6$.

-2 may be made to disappear from the first member by adding 2 to both members. The result (Axiom 2) is the equation $2x = 8$.

Dividing both members of this equation by 2, the coefficient of x, the resulting equation (Axiom 5) is $x = 4$, the value of x sought.

Or, since a term may be transposed from one member to the other if its sign is changed (Prin.), $3x$ transposed to the first member becomes $-3x$ and -2 transposed to the second member becomes $+2$. Therefore, the resulting equation is

$$5x - 3x = 2 + 6.$$

Uniting terms, $2x = 8$. Dividing both members by 2, the result is $x = 4$.

The result is *verified* by substituting the value of x for x in the original equation. If the members are then *identical*, the value found for the unknown number is correct.

2. If $5x - 7 = 30 - 7$, find the value of x.

PROCESS

$$5x - 7 = 30 - 7.$$
$$5x = 30.$$
$$\therefore\ x = 6.$$

SUGGESTION. — Since, if -7 were transposed from the first member to the second, it would appear as $+7$ and cancel the term -7 in that member, the two equal terms may be canceled before the transposition.

RULE. — *Transpose terms so that the unknown terms stand in the first member of the equation and the known terms in the second.*

Unite similar terms, and divide both members of the equation by the coefficient of the unknown number.

VERIFICATION. — *Substitute in the original equation the value of the unknown number thus found. If the members of the equation are then identical, the value of the unknown number found is correct.*

1. The same term with the same sign in both members of an equation may be canceled (Ax. 2 or 3).

2. If the signs of all the terms of an equation are changed, the equality will not be destroyed; for (Ax. 3) both members may be subtracted from 0 without destroying the equality.

Find the value of x and verify:

3. $5x + 3 = 8.$

4. $x + 5 = 11.$

5. $x - 5 = 11.$

6. $2x - 3 = 21.$

7. $5x + 7 = 42.$

8. $3x - 2 = 25.$

9. $2x + 4 = 10.$

10. $7x - 10 = 60.$

11. $7 + 2x = 11.$

12. $3 + 2x = 15.$

13. $1 + 12x = 85.$

14. $5 + 3x = 11.$

15. $7 + 5x = 47.$

16. $2 + 9x = 74.$

17. $3 = 5 - x$.

18. $9 - 5x = -1$.

19. $7x + 2 = x + 14$.

20. $5x - 5 = 2x + 4$.

21. $3x + 2 = x + 30$.

22. $5x - 2 = 2x + 7$.

23. $2 + 13x = 50 - 9$.

24. $10 + x = 18 - x$.

25. $2x + 2 = 32 - x$.

26. $7x - 12 = x + 13 + 5$.

27. $4x - 20 = 5x - 50 + x$.

28. $3x + 16 = 20 - 5x + 4$.

29. $7x - 55 = 18 - 2x - 1$.

30. $-x - 12 = 40 - 8x + 4$.

31. $80 - 3x = 83 - 8x + 7$.

32. $9x - 90 = 16 - x + 4$.

33. $50 - x = 20 + x$.

34. $7x + 25 = 30 + 6x - 3$.

Solve the following problems:

35. What number increased by 10 is equal to 19?

36. What number diminished by 30 is equal to 20?

37. What number diminished by 111 is equal to -15?

38. What number exceeds $\frac{1}{3}$ of itself by 10?

SUGGESTION. — Let $3x$ = the number.

39. Five times a number exceeds 3 times the number by 14. What is the number?

40. If 5 is subtracted from a certain number, and the difference is subtracted from 3 times the number, the result is 35. What is the number?

41. The double of a number is 64 less than 10 times the number. What is the number?

42. If 4 is subtracted from a certain number, and the difference is subtracted from 40, the result is 3 times the number. What is the number?

43. Three times a certain number is as much less than 72 as 4 times the number exceeds 12. What is the number?

44. Twice a certain number exceeds $\frac{1}{3}$ of the number as much as 6 times the number exceeds 65. What is the number?

45. If 16 is added to a certain number, the result is 56 diminished by 7 times the number. What is the number?

46. If 6 times a certain number lacks as much of 62 as 3 times the number exceeds 19, what is the number?

47. Three times a certain number increased by a is equal to the number increased by $9\,a$. What is the number?

48. The sum of 4 numbers in a row is 58. If their common difference is 3, what are the numbers?

SUGGESTION. — Let x = the smallest number.

Then, $x + 3$ = the second number,

$x + 6$ = the third number,

and $x + 9$ = the fourth number.

49. A man distributed 1 dollar among 5 boys so that each boy except the youngest received 5 cents more than the boy next younger. If the boys were all of different ages, how much did each receive?

50. The common difference of 5 numbers is 2, and their sum is 100. What are the numbers?

51. John and James were comparing their earnings. John said, "I have earned 50 cents." James replied, "If I had earned half as much as I have, and 10 cents more, I should have earned the same as you." How much had James earned?

52. A drover, when asked how many cattle he had, replied, "If I had $\frac{1}{2}$ more than I have and 2 more, I should have 200." How many cattle had he?

53. The earnings of a mill for 4 years were \$46,000. If the books showed an annual increase of \$1000, what were the earnings for each year?

54. James had $\frac{2}{3}$ as much money as John, John 5 cents less than William, and Robert 5 cents more than 3 times as much as James. If they together had \$1.50, how much had each?

SUGGESTION. — Let $3\,x$ = the number of cents John had.

55. A speculator who doubled his money by a fortunate investment, afterward lost \$600, but he still had \$400 more than the original sum. How much had he at first?

MULTIPLICATION

76. 1. How many are $3x+3x+3x+3x+3x$?

2. How many are 5 times $3x$? 2 times $3x$? 7 times $2a$?

3. A man saves \$10 a month, indicated by $^{+}10$. How many dollars will he save in a year? What sign should be placed before the result to indicate the number of dollars *saved?*

4. How many are 12 times $^{+}10$? 12 times $^{+}10a$? 5 times $^{+}3x$? 8 times $^{+}2m$?

5. When a positive number is multiplied by a positive number, what is the sign of the product?

6. If a man loses \$5 a month, indicated by $^{-}5$, how many dollars will he lose in a year? What sign should be placed before the result to indicate the number of dollars *lost?*

7. How many are 12 times $^{-}5$? 12 times $^{-}5b$? $7a$ times $^{-}3x$? 3 times $^{-}2b$? 11 times $^{-}3y$? 5 times $^{-}5ab$?

8. When a negative number is multiplied by a positive number, what is the sign of the product?

9. If a man's gains in business are \$10 a month, indicated by $^{+}10$, how many dollars less had he 3 months ago, indicated by $^{-}3$, than he has now? Indicate the result algebraically.

10. How many are $^{+}10$ multiplied by $^{-}3$? $^{+}10$ multiplied by $^{-}5$? $^{+}2$ multiplied by $^{-}3$? ^{+}a multiplied by ^{-}b?

11. What is the sign of the product when a positive number is multiplied by a negative number? When a negative number is multiplied by a positive number?

12. What, then, is the sign of the product of two numbers having unlike signs?

13. If a man who is in debt is getting deeper in debt at the rate of \$10 a month, indicated by $^-10$, how much better off was he 3 months ago, indicated by $^-3$, than he is now? Indicate the result algebraically.

14. How many are $^-10$ multiplied by $^-3$? $^-10$ multiplied by $^-5$? $^-2$ multiplied by $^-3$? ^-a multiplied by ^-b?

15. What is the sign of the product of two negative numbers? of two positive numbers?

16. What, then, is the sign of the product of two numbers having like signs?

17. What is the sign of $^-5 \times ^-2$? of $^-5 \times ^-2 \times ^-2$? of $^-5 \times ^-2 \times ^+2 \times ^-2$? of $^+5 \times ^-2 \times ^-2 \times ^-2 \times ^-2$? of $^-2 \times ^-3 \times ^+2 \times ^+2 \times ^-2 \times ^-2 \times ^-2$?

18. What sign has a product, if the number of negative factors is *even?* What sign has a product, if the number of negative factors is *odd?*

19. What, then, determines the sign of a product?

20. In the expression a^3, what is 3 called? What does it indicate? In a^7 how many times is a used as a factor?

21. When a^3 is multiplied by a^4, how many times is a used as a factor in the product? when a^2 is multiplied by a^6?

When a^m is multiplied by a^n, what is the product, if m and n are positive integers?

22. How, then, is the exponent of a factor in the product determined?

77. When the multiplier is a positive integer, the process of taking the multiplicand additively as many times as there are units in the multiplier is called **Multiplication.**

When the multiplier is any number, multiplication may be defined as *the process of finding a number that has the same relation to the multiplicand as the multiplier has to* **1.**

The multiplicand and multiplier are called the *factors* of the product.

78. PRINCIPLES. — 1. **Law of Signs.** — *The sign of the product of two factors is + when they have like signs, and − when they have unlike signs.*

2. **Law of Coefficients.** — *The coefficient of the product is equal to the product of the coefficients of the factors.*

3. **Law of Exponents.** — *The exponent of a number in the product is equal to the sum of its exponents in the factors.*

79. The Law of Signs may be established as follows:

$$+3 = {}^{+}1 + {}^{+}1 + {}^{+}1, \tag{1}$$

and $$-3 = {}^{-}1 + {}^{-}1 + {}^{-}1 = -{}^{+}1 - {}^{+}1 - {}^{+}1; \tag{2}$$

that is, $+3$ is obtained from $+1$ by taking $+1$ additively three times, and -3 by taking $+1$ subtractively three times.

Hence, § 77, multiplying any number by $+3$ is equivalent to taking that number additively three times, and multiplying any number by -3 is equivalent to taking that number subtractively three times.

By (1), $$+5 \times +3 = +5 + {}^{+}5 + {}^{+}5 = +15, \tag{3}$$

and $$-5 \times +3 = -5 + {}^{-}5 + {}^{-}5 = -15. \tag{4}$$

By (2), $$+5 \times -3 = -{}^{+}5 - {}^{+}5 - {}^{+}5 = -15, \tag{5}$$

and $$-5 \times -3 = -{}^{-}5 - {}^{-}5 - {}^{-}5 = +15. \tag{6}$$

Similarly, since $+(\frac{3}{2}) = {}^{+}(\frac{1}{2}) + {}^{+}(\frac{1}{2}) + {}^{+}(\frac{1}{2})$ and $-(\frac{3}{2}) = -{}^{+}(\frac{1}{2}) - {}^{+}(\frac{1}{2}) - {}^{+}(\frac{1}{2})$,

$$+5 \times {}^{+}(\tfrac{3}{2}) = {}^{+}(\tfrac{5}{2}) + {}^{+}(\tfrac{5}{2}) + {}^{+}(\tfrac{5}{2}) = {}^{+}(\tfrac{15}{2}); \tag{7}$$

and so on, as in (4), (5), and (6).

In (3) and (6) the product of two algebraic numbers with like signs is positive.

In (4) and (5) the product of two algebraic numbers with unlike signs is negative.

(7) shows that like results are obtained when the multiplier is a fractional number (§ 7).

Passing to general symbols, let a and b be any absolute numbers.

First, when b is a whole number.

Since $$+b = {}^{+}1 + {}^{+}1 + {}^{+}1 + \cdots \text{ to } b \text{ terms},$$

§ 77, $$+a \times {}^{+}b = {}^{+}a + {}^{+}a + {}^{+}a + \cdots \text{ to } b \text{ terms}$$

$$= {}^{+}ab, \tag{8}$$

and $$-a \times {}^{+}b = {}^{-}a + {}^{-}a + {}^{-}a + \cdots \text{ to } b \text{ terms}$$

$$= {}^{-}ab. \tag{9}$$

Since $$-b = -{}^{+}1 - {}^{+}1 - {}^{+}1 - \cdots \text{ to } b \text{ terms},$$

§ 77, $$+a \times {}^{-}b = -{}^{+}a - {}^{+}a - {}^{+}a - \cdots \text{ to } b \text{ terms}$$

$$= {}^{-}ab, \tag{10}$$

and $$-a \times {}^{-}b = -{}^{-}a - {}^{-}a - {}^{-}a - \cdots \text{ to } b \text{ terms}$$

$$= {}^{+}ab. \tag{11}$$

Second, when b is a fractional number.

As in (7), the same reasoning applies when b is a fractional number.

Hence, from (8) and (11), the product of any two algebraic numbers with like signs is positive; and from (9) and (10), the product of any two algebraic numbers with unlike signs is negative.

When the multiplier is a positive or negative whole or fractional number, it appears from the above proofs that algebraic multiplication is only abbreviated algebraic addition. Hence, as in addition, but one set of signs + and − is required to denote both quality and operation.

Hence, the Law of Signs may be expressed as follows:

$+a$ multiplied by $+b = +ab$,

$-a$ multiplied by $-b = +ab$,

$-a$ multiplied by $+b = -ab$,

and $+a$ multiplied by $-b = -ab$.

80. It follows from the Law of Signs, applied repeatedly, that *the product of any number of algebraic numbers is + when the number of negative factors is even, and − when the number of negative factors is odd.*

81. The Law of Exponents or the Index Law for multiplication may be established for *positive integral exponents* as follows:

Let m and n be any positive integers.

By the definition of a power, § 24,

$$a^m = a \times a \times a \ldots \text{ to } m \text{ factors},$$

$$a^n = a \times a \times a \ldots \text{ to } n \text{ factors};$$

$$\therefore a^m \times a^n = (a \times a \times a \ldots \text{ to } m \text{ factors})(a \times a \times a \ldots \text{ to } n \text{ factors})$$

$$= a \times a \times a \ldots \text{ to } (m+n) \text{ factors}.$$

Hence, $a^m \times a^n = a^{m+n}$.

In like manner, $a^m \times a^n \times a^p = a^{m+n+p}$.

Thus, $a^2 \times a^4 = a^{2+4} = a^6$,

and $a^3 \times a^2 \times a^4 = a^{3+2+4} = a^9$.

82. 1. How does 2×5 compare with 5×2 in value? 3×7 with 7×3? $2 \times 5 \times 6$ with $2 \times 6 \times 5$?

2. What is the effect upon the value of a product of changing the order of its factors?

Law of Order, or Commutative Law for Multiplication. — *The factors of a product may be taken in any order.*

The Law of Order may be established as follows:

Since the number of negative factors will not be changed by taking the factors in any order, § 80, the *sign* of the product is the same in whatever order the factors are taken.

We know from arithmetic that arithmetical numbers may be multiplied in any order. Hence, the *absolute value* of the product is the same in whatever order the factors are taken.

Since neither the sign nor the absolute value of the product of algebraic numbers is changed by changing the order of the factors, the factors may be taken in any order.

In general symbols, $a \times b \times c \times \cdots = b \times c \times a \times \cdots =$ etc.

83. 1. How does $2 \times 3 \times 5$, or 6×5, compare in value with $2 \times (3 \times 5)$, or 2×15? with 5×6? $a \times b \times c$, or $(ab) \times c$, with $a \times (bc)$?

2. How may the factors of a product be grouped?

Law of Grouping, or Associative Law for Multiplication. — *The factors of a product may be grouped in any manner.*

The Law of Grouping may be established as follows:

By the notation of multiplication, abc denotes that a is to be multiplied by b and then the product ab is to be multiplied by c; that is,

$$abc = (ab)c. \qquad (1)$$

1. Let it be required to prove that $(ab)c = a(bc)$.

By the Law of Order, $abc = bca$

by notation, $= (bc)a$

by the Law of Order, $= a(bc)$. (2)

From (1) and (2), $(ab)c = a(bc)$.

Similarly, it may be proved that $(ab)c = b(ac)$, etc.

2. Let it be required to prove that $abcd = (ab)(cd)$.

By notation, $abcd = ab \times c \times d$

putting m for ab, $= m \cdot c \cdot d$, or mcd.

By 1, $m \cdot c \cdot d = m(cd)$.

Putting ab for m, $(ab) \cdot c \cdot d = (ab)(cd)$;

that is, by notation, $abcd = (ab)(cd)$.

Similarly, it can be shown that $(abc)d = a(bcd) = (bc)(ad) = (ac)(bd) = (abd)c = (adc)b = c(dba) =$ etc., the factors being grouped in any manner whatever.

3. In a similar way the law may be established for any number of factors, successively for 5, 6, 7, ··· factors.

Hence, $abc \cdots p = a(bc \cdots p) = b(ac \cdots p)$, etc., for all values of the letters.

84. To multiply a monomial by a monomial.

EXAMPLES

1. Multiply $5\,x^2y^3$ by $-3\,xy^2z$.

PROCESS

$$\begin{array}{r} 5\ x^2y^3 \\ -\ 3\ xy^2z \\ \hline -15\,x^3y^5z \end{array}$$

EXPLANATION. — Since the multiplier is composed of the factors -3, x, y^2, and z, the multiplicand may be multiplied by each successively. -3 times $5\,x^2y^3 = -15\,x^2y^3$ (Prin. 1 and 2); x times $-15\,x^2y^3 = -15\,x^3y^3$ (Prin. 3); y^2 times $-15\,x^3y^3 = -15\,x^3y^5$ (Prin. 3); and this multiplied by z is equal to $-15\,x^3y^5z$ (Prin. 3).

Or, since the signs of the numbers are unlike, the sign of their product is $-$; the coefficient of the product is the product of the coefficients 5 and 3; and the product of the literal numbers is expressed by affecting each with an exponent equal to the sum of its exponents in the factors.

RULE. — *To the product of the numerical coefficients annex the letters, each with an exponent equal to the sum of its exponents in both factors.*

Write the sign + before the product when its factors have like signs, and − when they have unlike signs.

	2.	3.	4.	5.	6.
Multiply	-2	6	-7	$2\,a$	$2\,m^3$
By	8	-2	-9	5	$6\,m^2$

	7.	8.	9.	10.	11.
Multiply	$10\,a^5$	x^2y^2	$-4\,abc$	$5\,a^2bc^3$	$-2\,xy^2$
By	$5\,a^3$	xy^3	$2\,a^2b$	$-7\,ab^2c$	$2\,x^2y$

	12.	13.	14.	15.	16.
Multiply	$-3\,a^2x^2$	$-5\,m^3n^2$	$-6\,a^2b^2c^2x$	$4\,abcd$	$-3\,x^2by^3$
By	$-2\,ax^3$	$3\,mn$	$-4\,a^3bny^2$	-1	-1

	17.	18.	19.	20.	21.
Multiply	$-2\,a^6x^2$	$-3\,n^3y$	$4\,a^2xb^3y^4$	-1	$-5\,n^3n^2d^2y^3$
By	$-4\,ax^4$	$6\,b^3y$	$3\,a^3x^4b^2y$	-1	$-2\,m^{10}n^6c^2y^2$

	22.	23.	24.	25.	26.
Multiply	$5\,pq^2x^2$	$10\,m^4n^3$	$-2\,a^2m^3n^4$	x^2yz	$-p^2d^2q^2$
By	$-2\,rq^4x$	$-3\,n^2m^4$	$8\,b^5n^6m^7$	$-x^2yz^2$	$-abc$

	27.	28.	29.	30.	31.
Multiply	$2\,a^{m+1}$	$-5\,x^n$	$-x^n y^n$	$-x^{n-1}y^{n-2}$	$4\,x^{n-1}$
By	$3\,a^2$	x	$3\,xy$	$-xy$	$-2\,x^{n+4}$

	32.	33.	34.	35.	36.
Multiply	$5\,y$	$-a^m$	a^{m-n}	$-x^{1-n}$	y^{n-m}
By	$-3\,y^{n-2}$	$-a^n$	a^n	$-x^n$	y^{m-n+1}

	37.	38.	39.
Multiply	$a^2b^3x^3y^{n-2}$	$a^{n-1}b^{n-2}c^3$	$m^a n^c b^2 y^a$
By	$a^n b^{n-3} y^2$	$a^{n+1}b^2c^{n-1}$	$m^b n^d b^x y^{b-a}$

85. How does 25×2 compare in value with 20×2 plus 5×2? How is 133, or $100 + 30 + 3$, multiplied by 2? How is the polynomial $a + b + c$ multiplied by the monomial m?

Distributive Law for Multiplication. — *The product of a polynomial by a monomial is equal to the algebraic sum of the partial products formed by multiplying each term of the polynomial by the monomial.*

The Distributive Law may be established as follows:

Let $a + b$ be the multiplicand and m the multiplier, a, b, and m being positive or negative integral or fractional numbers.

By the Law of Order the multiplier may change places with the multiplicand. Hence, $(a + b) \times m$ may be written $m(a + b)$.

It is to be proved that $m(a + b) = ma + mb$.

First, when m is a positive integer.

Since $m = 1 + 1 + 1 + \cdots$ to m terms,

§ 77, $m(a + b) = (a + b) + (a + b) + (a + b) + \cdots$ to m terms

§ 56, $= (a + a + a + \cdots$ to m terms$) + (b + b + b + \cdots$ to m terms$)$

§ 77, $= ma + mb.$ (1)

Second, when m is a fractional number.

Let $m = \frac{p}{q}$, in which p and q are absolute integers.

$$\frac{p}{q}(a + b) = p \text{ times one } q\text{th of } (a + b)$$

$$= p(a + b) \ q\text{ths}$$

by (1), $$= pa \ q\text{ths} + pb \ q\text{ths}$$

$$= \frac{p}{q} \text{ of } a + \frac{p}{q} \text{ of } b$$

$$= \frac{p}{q}\,a + \frac{p}{q}\,b. \qquad (2)$$

Third, when m is negative.

Let $m = -n$, n being any positive whole or fractional number.

It is to be proved that $(-n)(a+b) = -na - nb$.

By (1) and (2), $n(a+b) = na + nb$. (3)

Since, if $+n$ is positive, $-(-n)$ is also positive, substituting $-(-n)$ for $+n$ in (3),

$$-(-n)(a+b) = -(-n)a - (-n)b$$
$$= -(-na - nb). \quad (4)$$

Since both $-(-n)(a+b)$ and $-(-na-nb)$ are now *monomial* in form, both members of (4) may be multiplied by the monomial -1.

$$\therefore +(-n)(a+b) = +(-na - nb),$$

or $$(-n)(a+b) = -na - nb. \quad (5)$$

By (1), (2), and (5), $m(a+b) = ma + mb$

for all positive or negative whole or fractional values of m and for all values of a and b.

86. To multiply a polynomial by a monomial.

EXAMPLES

1. Multiply $3x^2 - y^2$ by $-4y$.

PROCESS

$$\begin{array}{r} 3x^2 - y^2 \\ -4y \\ \hline -12x^2y + 4y^3 \end{array}$$

EXPLANATION. — By § 85, each term of the multiplicand is to be multiplied by the multiplier.

The product of $3x^2$ and $-4y$ is $-12x^2y$. But since the entire multiplicand is $3x^2 - y^2$, $-4y$ times y^2 must be subtracted from $-12x^2y$. $-4y$ times $y^2 = -4y^3$, which subtracted from $-12x^2y$ gives $-12x^2y + 4y^3$.

Or, since a polynomial multiplied by a monomial is equal to the algebraic sum of the partial products formed by multiplying each term of the polynomial by the monomial, § 85, $3x^2 - y^2$ multiplied by $-4y$ is equal to $-12x^2y + 4y^3$.

RULE. — *Multiply each term of the polynomial by the monomial, and find the algebraic sum of the partial products.*

	2.	3.	4.
Multiply	$2a^2 - 2ab + 3b^2$	$5m^2 - 4n^2$	$5x^2 - 2xy - y^2$
By	$3ab$	$-2m^2n$	$-x^2y$

Multiply:

5. $3x^2 - 2xy$ by $5xy^2$.
6. $m^2n^3 - 3mn^4$ by $2mn$.
7. $3a^3 - 6a^2b$ by $-2b$.
8. $p^2q^2 - 2pq^3$ by $-pq$.
9. $4a^2 - 5b^2c$ by abc^2.
10. $-2ac + 4ax$ by $-5acx$.

Perform the multiplications indicated:

11. $a^2bc(3a^4 - 4a^3b - 5a^2b^2 + 2ab^3 - 16b^4)$.

12. $2xy(5x^2 - 10xy - 36y^2 - 5x + 5y + 120)$.

13. $5m^3(16m^3 - 20m^2n + 13mn^2 - 25n^3)$.

14. $abc(a^2b^2 - 2a^2c^2 - 2b^2c^2 - a^4 - 4b^4 - c^4 - 5abc)$.

15. $-bc(b^4 + c^4 - b^3 - c^3 + b^2c^2 - 4b^2c + 8bc^2 - 2bc)$.

16. $-2x(x^4 - 5x^3y - 16x^2y^2 + 24xy^3 - y^4 - xy - x + 4)$.

87. To multiply a polynomial by a polynomial.

To multiply $p + q + r$ by $a + b$,

§ 85, $(p + q + r)(a + b) = p(a + b) + q(a + b) + r(a + b)$

§§ 82, 85, $= ap + bp + aq + bq + ar + br$

§ 55, $= ap + aq + ar + bp + bq + br$.

RULE. — *Multiply every term of the multiplicand by each term of the multiplier, and find the algebraic sum of the partial products.*

EXAMPLES

1. Multiply $x^2 - xy$ by $2x + 3y$.

PROCESS

$$\begin{array}{l} \qquad\qquad x^2 - xy \\ \qquad\qquad 2x + 3y \\ \hline +2x \text{ times } (x^2 - xy) = \quad 2x^3 - 2x^2y \\ +3y \text{ times } (x^2 - xy) = \qquad\quad + 3x^2y - 3xy^2 \\ \hline \therefore (2x + 3y) \text{ times } (x^2 - xy) = \quad 2x^3 + x^2y - 3xy^2 \end{array}$$

2. Multiply $x^3 - 3x^2y + 3xy^2 - y^3$ by $x^2 - xy$.

PROCESS

$$\begin{array}{l} x^3 - 3x^2y + 3xy^2 - y^3 \\ x^2 - xy \\ \hline x^5 - 3x^4y + 3x^3y^2 - x^2y^3 \\ \quad - x^4y + 3x^3y^2 - 3x^2y^3 + xy^4 \\ \hline x^5 - 4x^4y + 6x^3y^2 - 4x^2y^3 + xy^4 \end{array}$$

3. Multiply $5x + x^3 - 2x^2 - x^4$ by $3x + 1 - x^2$.

PROCESS	TEST
$5x - 2x^2 + x^3 - x^4$	$= +3$
$1 + 3x - x^2$	$= +3$
$5x - 2x^2 + 1x^3 - 1\|x^4$	
$\quad 15\| - 6\| + 3\| - 3\|x^5$	
$\quad - 5\| + 2\| - 1\| + x^6$	
$5x + 13x^2 - 10x^3 + 4x^4 - 4x^5 + x^6$	$= +9$

Suggestion. — For convenience in writing partial products, both polynomials are arranged so that in passing from left to right the several powers of x are either successively higher or lower. In this process, the polynomials are arranged according to the ascending powers of x.

Test. — Since the correct product of $5x - 2x^2 + x^3 - x^4$ and $1 + 3x - x^2$ is the same in form whatever value x represents, it is possible, by assigning an arithmetical value to x, to change the process of multiplying one algebraic expression by the other into a process of multiplying one arithmetical number by another as shown in the test.

Let 1 be substituted for x.

Multiplicand	$= 5x - 2x^2 + x^3 - x^4 = 5 - 2 + 1 - 1 =$	$+3$
Multiplier	$= 1 + 3x - x^2 \quad = 1 + 3 - 1 \quad =$	$+3$
Product should be equal to		$+9$

$5x + 13x^2 - 10x^3 + 4x^4 - 4x^5 + x^6 = 5 + 13 - 10 + 4 - 4 + 1 = +9.$

In like manner the multiplication of any two literal expressions may be tested arithmetically by assigning any values we please to the letters. It is usually most convenient to substitute $+1$ for each letter, since this may be readily done by adding the numerical coefficients.

Multiply, and test each result:

4. $2x + 3$ by $x + 2$.

5. $4x + 1$ by $3x + 4$.

6. $5n - 1$ by $4n + 5$.

7. $h + 2k$ by $3h - k$.

8. $3r - 6s$ by $5r - 2s$.

9. $4r + 2s$ by $2r + 9s$.

10. $3l + 5t$ by $2l + 6t$.

11. $4a + 3x$ by $4a - 3x$.

12. $4y - 6b$ by $2y + b$.

13. $3x - 2y$ by $3x + 2y$.

14. $2b + 5c$ by $5b - 2c$.

15. $7x - 2n$ by $4x + 2n$.

16. $ab - 15$ by $ab + 10$.

17. $ax + by$ by $ax - by$.

18. $a^2 - ay + y^2$ by $a + y$.

19. $3a^2 - 6ab + 3b^2$ by $2a - 3b$.

Multiply:

20. $2a^2 - 3b^2 - ab$ by $3a^2 - 4ab - 5b^2$.
21. $5x - 5x^2 + 10$ by $12 - 30x + 2x^2$.
22. $3n^2 + 3m^2 + mn$ by $m^3 - 2mn^2 + m^2n$.
23. $4y^2 - 10 + 2y$ by $2y^2 - 3y + 5$.
24. $4x - 3x^2 + 2x^3$ by $3x - 10x^2 + 10$.
25. $a^5 + a^4 + 4a^3 - a^2 + a$ by $a + 1$.
26. $31x^3 - 27x^2 + 9x - 3$ by $3x + 1$.
27. $4x^3 - 3x^2y + 5xy^2 - 6y^3$ by $5x + 6y$.
28. $a + b + c + d$ by $a - b - c + d$.
29. $a^2 + b^2 + c^2 - ab - ac - bc$ by $a + b + c$.
30. $ax^{2n} + ay^{2n}$ by $ax^{2n} - ay^{2n}$.
31. $ax^{n-1} + y^{n-1}$ by $3ax^{n-1} + 2y^{n-1}$.
32. $x^{2n} + 2x^n y^n + y^{2n}$ by $x^{2n} - 2x^n y^n + y^{2n}$.

An indicated product is said to be *expanded* when the multiplication is performed.

Expand:

33. $(x + y)(x + y)$.
34. $(a + b)(a + b)$.
35. $(c^3 + d^3)(c^3 + d^3)$.
36. $(x^n + y^n)(x^n + y^n)$.
37. $(3a + b)(3a + b)$.
38. $(3a + b)(3a - b)$.
39. $(2a^2 + b)(2a^2 - b)$.
40. $(x^n + y^n)(x^n - y^n)$.
41. $(3ax + 2by)(3ax + 2by)$.
42. $(3ax + 2by)(3ax - 2by)$.
43. $(4m - 5n)(4m + 5n)$.
44. $(a + b + c)(a + b - c)$.
45. $(a + b)(a - b)(a + b)(a - b)$.
46. $(a^2 + x^2)(a^2 - x^2)(a^2 + x^2)(a^2 - x^2)$.
47. $(a - b)(a + b)(a^2 + b^2)(a^4 + b^4)$.
48. $(a^m - b^n)(a^m + b^n)(a^{2m} + b^{2n})$.
49. $(2a + 3b + 5c)(2a + 3b - 5c)$.
50. $(5m - 2n + x)(5m - 2n - x)$.
51. $(x^n - nx^{n-1}y + \frac{1}{2}nx^{n-2}y^2)(x + y)$.
52. $(x^p + 3x^{p-1}z - 6x^{p-2}z^2)(x^2 - y^2)$.

88. When polynomials are arranged according to the ascending or the descending powers of some literal factor, processes may frequently be abridged by using the **Detached Coefficients.**

53. Expand $(2x^4-3x^3+3x+1)(3x+2)$.

FULL PROCESS

$$\begin{array}{l} 2x^4-3x^3+3x+1 \\ 3x+2 \\ \hline 6x^5-9x^4+9x^2+3x \\ \quad 4x^4-6x^3+6x+2 \\ \hline 6x^5-5x^4-6x^3+9x^2+9x+2 \end{array}$$

DETACHED COEFFICIENTS

$$\begin{array}{llllll} 2 & -3 & +0 & +3 & +1 & \\ 3 & +2 & & & & \\ \hline 6 & -9 & +0 & +9 & +3 & \\ & 4 & -6 & +0 & +6 & +2 \\ \hline 6 & -5 & -6 & +9 & +9 & +2 \end{array}$$

$6x^5-5x^4-6x^3+9x^2+9x+2$

Since the second power of x is wanting in the first factor, the term, if it were supplied, would be $0x^2$, and the detached coefficient of the term would be 0.

The detached coefficients of missing terms should be supplied to prevent confusion in placing the coefficients in the partial products and to prevent errors in determining the result.

54. Multiply $a^4-2a^3b+3a^2b^2-5ab^3+5b^4$ by $a+2b$.

PROCESS

$$\begin{array}{l} 1-2+3-5+5 \\ 1+2 \\ \hline 1-2+3-5+5 \\ \quad 2-4+6-10+10 \\ \hline 1+0-1+1-5+10 \end{array}$$

TEST

$$\begin{array}{l} =2 \\ =3 \\ \\ \\ =6 \end{array}$$

$$=a^5+0a^4b-a^3b^2+a^2b^3-5ab^4+10b^5$$

$$=a^5-a^3b^2+a^2b^3-5ab^4+10b^5.$$

Observe that the powers of a decrease uniformly from left to right, and that the powers of b increase uniformly from left to right.

Observe also that the sum of the exponents is the same in every term.

Expand the following, using detached coefficients, and test the results:

55. $(x^4+4x^3y+6x^2y^2+4xy^3+y^4)(x+y)$.

56. $(5x^8-x^7-2x^5+x^4+3x^3-1)(x+2)$.

57. $(a^3 + 4a^2 + 16a - 32)(a^3 + a^2 + a + 1)$.

58. $(p^2 - 2pq + q^2)(p^2 + 2pq + q^2)$.

59. $(x - 1)(x - 2)(x - 3)(x + 4)(x + 2)$.

60. $(15r^4s - 10rs^4 + r^5 + s^5 + 3r^3s^2 + 3r^2s^3)(r - 2s)$.

61. $(x^{10} - x^9 + x^8 - x^7 + x^6 - x^5 + x^4 - x^3 + x^2 - x + 1)(x + 1)$.

62. $(x^{10} + 3x^8 - 2x^6 + 5x^4 + 2x^2 + 2)(x^6 + x^4 + x^2 + 1)$.

63. $(x^4 + x^3 + x^2 + x + 1)(x^4 - x^3 + x^2 - x + 1)(x + 1)(x - 1)$.

64. $(x^7 - 4x^6y + 5x^5y^2 + 3x^3y^4 - x^2y^5 + xy^6 - y^7)(2x - 3y)$.

Expand:

65. $(2x^3 + 4x^2 + 8x + 16)(3x - 6)$.

66. $(x^3 + 4x^2 + 5x - 24)(x^2 - 4x + 11)$.

67. $(x^3 - 4x^2 + 11x - 24)(x^2 + 4x + 5)$.

68. $(x^2 - x + 1)(x^2 + x + 1)(x^4 - x^2 + 1)$.

69. $(16a^4 - 8a^3 + 4a^2 - 2a + 1)(2a + 1)$.

70. $(a^3 - 2a^2 + 3a - 4)(4a^3 + 3a^2 + 2a + 1)$.

71. $(m^4 + 2m^3 + m^2 - 4m - 11)(m^2 - 2m + 3)$.

72. $(m^3 + 2m^2n + 2mn^2 + n^3)(m^3 - 2m^2n + 2mn^2 - n^3)$.

73. $(x^3 - \frac{1}{2}x^2 + \frac{1}{4}x - \frac{3}{16})(x + \frac{1}{2})$.

74. $(\frac{1}{2}x^3 + \frac{1}{3}x^2 + \frac{2}{3}x + 2)(x - \frac{2}{3})$.

75. $\left(\frac{x^3}{8} - \frac{3x^2}{4} + \frac{3x}{2} - 1\right)\left(4x + 4\right)$.

76. $\left(a^2 - \frac{2a}{3}\right)\left(3a^2 + 2a\right)\left(3a - 3\right)$.

77. $(x^{n-1} - x^{n-2} + x^{n-3} - x^{n-4})(x + 1)$.

78. $(1 - a^n + a^{2n} - a^{3n})(1 - a^n)$.

79. $(a^{2n} + 2a^nb^n + b^{2n})(a^n - b^n)$.

80. $(x^{2n} - x^ny^m + y^{2m})(x^n + y^m)$.

Equations and Problems

89. **1.** Given $5(2x-3)=7(3x+5)-72$, to find the value of x.

Solution

$$5(2x-3)=7(3x+5)-72.$$

Expanding, $10x-15=21x+35-72.$

Transposing, $10x-21x=15+35-72.$

Uniting terms, $-11x=-22.$

Multiplying by -1, $11x=22.$

$$\therefore\ x=2.$$

Verification. — Substituting 2 for x in the given equation,

$$5(4-3)=7(6+5)-72.$$

$$5=77-72=5.$$

Find the value of x, and verify the result, in the following:

2. $4=5-(x-2)-(x-3).$

3. $2=2x-5-(x-3).$

4. $1=5(2x-4)+5x+6.$

5. $10x-2(x-3)=-10.$

6. $6x-3(x-6)=4(2x-1)+2.$

7. $7(5-3x)=3(3-4x)-1.$

8. $4(2-4x)=4-2(x+5).$

9. $5+3x-4=13+4(x-4).$

10. $49-2(2x+3)=9+2(2x-3).$

11. $3x-2(4x-5)=-2(6+2x).$

12. $3(x+1)-2(2x+5)=6(3-x).$

13. $2(x-5)+7=x+30-9(x-3).$

14. $5+7(x-5)=15(x+2-36).$

15. $(x-2)(x-2)=(x-3)(x-3)+7.$

16. $(x-4)(x+4)=(x-6)(x+5)+25.$

17. $4x^3-4(x^3-x^2+x-2)=4x^2.$

18. $7(2x-3b)=2b-3(2x+b).$

19. $11a=3(x-2a)-5(2x-2a).$

20. $3(2b-4x)-(x-b)=-6b.$

21. $4x-x^2=x(2-x)+2a.$

22. $2(x+d)=10c.$

23. $5c=5(x+a-b).$

24. $3(x-a-2b)=3b.$

25. $5b=3(2x-b)-4b.$

26. $13(x-a)=5(2x+a).$

27. $5(4x-3a)-6(3x-2a)=3a.$

Solve the following problems and verify the solutions:

28. George and Henry together had 46 cents. If George had 4 cents more than half as many as Henry, how many cents had each?

First Solution

Let x = the number of cents George had.

Then, $x - 4$ = the number of cents George had less 4,

and $2(x - 4)$ = the number of cents Henry had;

$\therefore\ x + 2(x - 4) = 46.$

Expanding, $x + 2x - 8 = 46;$

$\therefore\ x = 18$, the number of cents George had,

and $2(x - 4) = 28$, the number of cents Henry had.

Second Solution

Since George had 4 cents more than half as many as Henry,

let $2x$ = the number of cents Henry had;

then, $x + 4$ = the number of cents George had,

and $2x + x + 4 = 46;$

$\therefore\ x = 14,$

$2x = 28$, the number of cents Henry had,

and $x + 4 = 18$, the number of cents George had.

Verification

The answers obtained should be tested by the conditions of the problem. If they satisfy the conditions of the problem, the solution is presumably correct.

1st condition: — They had together 46 cents.

$$18 + 28 = 46.$$

2d condition: — George had 4 cents more than half as many as Henry.

$$18 = \tfrac{1}{2} \text{ of } 28 + 4.$$

29. In a certain election at which 8000 votes were polled, B received 500 votes more than half as many as A. How many votes did each receive?

30. A had \$40 more than B; B had \$10 more than one third as much as A. How much money had each?

31. Mary is 25 years younger than her mother. If she were one year older, she would be $\frac{1}{3}$ as old as her mother. What is the age of each?

32. If John had 3 more marbles, he would have 3 times as many as Clarence. Both have 41 marbles. How many has each?

33. Two boys together had \$8.20, and one had 50 cents less than half as much as the other. What amount had each?

34. If 5 is subtracted from twice a certain number, and the difference is multiplied by 3, the result is 9 less than 5 times the number. What is the number?

35. A is $\frac{3}{5}$ as old as B; 8 years ago he was $\frac{1}{2}$ as old as B. What is the age of each?

SUGGESTION. — Let $5x$ = the number of years in B's present age.

36. In 2 years A will be twice as old as he was 2 years ago. How old is he?

37. Two wheelmen start at the same time from A to ride to B. One rides at the rate of 10 miles an hour, and rests 3 hours; the other rides at the rate of 8 miles an hour, and by resting only 1 hour arrives at B as soon as the faster rider. How far is it from A to B, and how many hours are occupied in making the trip?

38. A man had two flocks of sheep with the same number of sheep in each. After selling 100 sheep from one flock, and 20 from the other, the numbers remaining were as 2 to 3. How many sheep had he in each flock at first?

39. Mary bought 17 apples for 61 cents. For a certain number of them she paid 5 cents each, and for the rest she paid 3 cents each. How many of each kind did she buy?

40. George is $\frac{1}{2}$ as old as his father; a years ago he was $\frac{1}{3}$ as old as his father. What is the age of each?

41. A rug is 3 feet longer than it is wide. When it is placed on the floor of a certain room, it leaves a margin of 2 feet on every side. If the area of the floor is 172 square feet greater than that of the rug, what are the dimensions of the floor?

SPECIAL CASES IN MULTIPLICATION

90. The square of the sum of two numbers.

$$(a + b)(a + b) = a^2 + 2\,ab + b^2.$$

$$(x + y)(x + y) = x^2 + 2\,xy + y^2.$$

1. When a number is multiplied by itself, what power is obtained? What is the second power, or square of $(a + b)$? of $(x + y)$?

2. How are the terms of the square of the sum of two numbers obtained from the numbers?

3. What signs have the terms?

91. PRINCIPLE. — *The square of the sum of two numbers is equal to the square of the first number, plus twice the product of the first and second, plus the square of the second.*

Since $5\,a^3 \times 5\,a^3 = 25\,a^6$, $3\,a^4b^5 \times 3\,a^4b^5 = 9\,a^8b^{10}$, etc., it is evident that in squaring a number the exponents of literal factors are doubled.

EXAMPLES

Expand by inspection:

1. $(m + n)(m + n)$.
2. $(p + q)(p + q)$.
3. $(r + s)(r + s)$.
4. $(a + x)(a + x)$.
5. $(x + 4)(x + 4)$.
6. $(m + 5)(m + 5)$.
7. $(a + 6)(a + 6)$.
8. $(y + 7)(y + 7)$.
9. $(z + 1)(z + 1)$.
10. $(2\,a + x)(2\,a + x)$.
11. $(3\,m + n)(3\,m + n)$.
12. $(5\,x + z)(5\,x + z)$.
13. $(3\,b + c)^2$.
14. $(2\,a + 3\,b)^2$.
15. $(5\,x + 2\,y)^2$.
16. $(7\,z + 3\,c)^2$.
17. $(3\,b + 10\,x)^2$.
18. $(a^3 + b^3)^2$.
19. $(a^5 + b^5)^2$.
20. $(a^n + b^n)^2$.
21. $(x^m + y^n)^2$.
22. $(3\,a^2 + 5\,b^3)^2$.
23. $(1 + 2\,a^3b)^2$.
24. $(x^{n-1} + y^{n-1})^2$.

25. Find the square of 41.

SOLUTION

$$41^2 = (40 + 1)^2 = 40^2 + 2 \times 40 \times 1 + 1^2 = \mathbf{1681}.$$

Square:

26. 21.	**29.** 45.	**32.** 22.	**35.** 81.
27. 24.	**30.** 83.	**33.** 72.	**36.** 91.
28. 25.	**31.** 65.	**34.** 43.	**37.** 101.

38. Find the square of $7\frac{1}{2}$.

SOLUTION

$$(7\tfrac{1}{2})^2 = (7 + \tfrac{1}{2})^2 = 7^2 + 2 \times 7 \times \tfrac{1}{2} + (\tfrac{1}{2})^2 = 49 + 7 + \tfrac{1}{4} = 56\tfrac{1}{4}.$$

Observe that the *middle term* of the square of any number expressed by an integer and the fraction $\frac{1}{2}$ is equal to the integer. Hence, the square of such a number is equal to the square of the integer, + the integer, + the square of the fraction. Observe also that the sum of the first two terms of the square may be found by multiplying the integer by the integer increased by 1.

Thus, $(3\frac{1}{2})^2 = 9 + 3 + \frac{1}{4} = 12\frac{1}{4}$,

or $(3\frac{1}{2})^2 = 3 \times 4 + \frac{1}{4} = 12\frac{1}{4}$.

Find the square of

39. $5\frac{1}{2}$.	**41.** $2\frac{1}{2}$.	**43.** 1.5.	**45.** 6.5.
40. $4\frac{1}{2}$.	**42.** $12\frac{1}{2}$.	**44.** 5.5.	**46.** 8.5.

92. The square of the difference of two numbers.

$$(a - b)(a - b) = a^2 - 2\,ab + b^2.$$

$$(x - y)(x - y) = x^2 - 2\,xy + y^2.$$

1. What is the square of $(a - b)$? of $(x - y)$?

2. How is the square of the difference of two numbers obtained from the numbers?

3. How does the square of $(a - b)$ differ from the square of $(a + b)$?

93. PRINCIPLE. — *The square of the difference of two numbers is equal to the square of the first number, minus twice the product of the first and second, plus the square of the second.*

EXAMPLES

Expand by inspection:

1. $(x-m)(x-m)$.
2. $(m-n)(m-n)$.
3. $(x-6)(x-6)$.
4. $(p-8)(p-8)$.
5. $(q-7)(q-7)$.
6. $(a-c)(a-c)$.
7. $(r-t)(r-t)$.
8. $(a-x)(a-x)$.
9. $(x-1)(x-1)$.
10. $(2a-x)^2$.
11. $(3m-n)^2$.
12. $(4x-y)^2$.
13. $(5m-n)^2$.
14. $(m-4n)^2$.
15. $(p-3q)^2$.
16. $(a-7b)^2$.
17. $(4a-3)^2$.
18. $(5x-4)^2$.
19. $(3x-2)^2$.
20. $(2x-5y)^2$.
21. $(2x-4y)^2$.
22. $(5m-3n)^2$.
23. $(3p-5q)^2$.
24. $(a^n-b^n)^2$.
25. $(x^m-y^n)^2$.
26. $(x^{m-1}-y^{n-1})^2$.
27. $(mx^m-ny^n)^2$.
28. Find the square of 19.

SOLUTION

$$19^2=(20-1)^2=20^2-2\times 20\times 1+1^2=361.$$

Find the square of

29. 49.
30. 69.
31. 79.
32. 29.
33. 38.
34. 48.
35. 67.
36. 89.
37. 99.
38. 998.
39. 999.
40. 595.

94. The square of any polynomial.

By actual multiplication,

$$(a+b+c)^2=a^2+b^2+c^2+2ab+2ac+2bc.$$

$$(a+b-c+d)^2=a^2+b^2+c^2+d^2+2ab-2ac+2ad-2bc+2bd-2cd.$$

$$(a+\cdots+k+\cdots+m)^2=a^2+\cdots+k^2+\cdots+m^2+2ak+\cdots$$
$$+2am+\cdots+2km+\cdots.$$

1. In the square of each polynomial what terms are squares?

2. How are the other terms formed from the terms of the polynomial?

3. What signs have the squares? How are the signs of the other terms determined?

95. PRINCIPLE. — *The square of a polynomial is equal to the sum of the squares of the terms and twice the product of each term by each term that follows it.*

EXAMPLES

Expand by inspection:

1. $(x+y+z)^2$.
2. $(x+y-z)^2$.
3. $(x-y-z)^2$.
4. $(x-y+z)^2$.
5. $(x+y-3z)^2$.
6. $(x-y+3z)^2$.
7. $(a-2b+c)^2$.
8. $(2a-b-c)^2$.
9. $(b-2a+c)^2$.
10. $(ax-by+cz)^2$.
11. $(ma+nb-rz)^2$.
12. $(qb-pc-rd)^2$.
13. $(ac-bd-de)^2$.
14. $(3x-2y+4z)^2$.
15. $(2a-5b+3c)^2$.
16. $(2m-4n-r)^2$.
17. $(12-2x+3y)^2$.
18. $(a+m+b+n)^2$.
19. $(a-m+b-n)^2$.

96. The product of the sum and difference of two numbers.

$$(a+b)(a-b)=a^2-b^2.$$
$$(x^n+y^n)(x^n-y^n)=x^{2n}-y^{2n}.$$

1. Since $a+b$ represents the sum and $a-b$ the difference of two numbers, to what is the product of the sum and the difference of two numbers equal?

2. How are the terms of the product obtained from the numbers?

3. What sign connects the squares?

97. PRINCIPLE. — *The product of the sum and difference of two numbers is equal to the difference of their squares.*

EXAMPLES

Expand by inspection:

1. $(x+y)(x-y)$.
2. $(a+c)(a-c)$.
3. $(m+n)(m-n)$.
4. $(p+q)(p-q)$.
5. $(p+5)(p-5)$.
6. $(r+s)(r-s)$.
7. $(x+1)(x-1)$.
8. $(x^2+1)(x^2-1)$.
9. $(x^3+1)(x^3-1)$.
10. $(x^4-1)(x^4+1)$.

11. $(x^5 - 1)(x^5 + 1)$.
12. $(x^n + y^3)(x^n - y^3)$.
13. $(ab + 5)(ab - 5)$.
14. $(cd + d^2)(cd - d^2)$.
15. $(2x + 3y)(2x - 3y)$.
16. $(3m + 4n)(3m - 4n)$.
17. $(12 + xy)(12 - xy)$.
18. $(3m^2n - b)(3m^2n + b)$.
19. $(ab + cd)(ab - cd)$.
20. $(2x^3 + 5y^2)(2x^3 - 5y^2)$.
21. $(3x^6 + 2y^6)(3x^6 - 2y^6)$.
22. $(2a^2 + 2b^2)(2a^2 - 2b^2)$.
23. $(-5n - 2b)(-5n + 2b)$.
24. $(-x - 2y)(-x + 2y)$.
25. $(-5 - 3m)(-5 + 3m)$.
26. $(x^{m-1} + y^{n+1})(x^{m-1} - y^{n+1})$.
27. $(3x^m + 7y^n)(3x^m - 7y^n)$.
28. $(5a^3b^2 + 2x^x)(5a^3b^2 - 2x^x)$.

One or both of the numbers may consist of more than one term.

29. Expand $(a + m - n)(a - m + n)$.

SOLUTION

$$a + m - n = a + (m - n).$$

$$a - m + n = a - (m - n).$$

$$\therefore [a + m - n][a - m + n] = [a + (m - n)][a - (m - n)].$$

Prin., $= a^2 - (m - n)^2$

§ 93, $= a^2 - (m^2 - 2mn + n^2)$

$= a^2 - m^2 + 2mn - n^2$.

Expand:

30. $(a + x - y)(a - x + y)$.
31. $(x + c - d)(x - c + d)$.
32. $(r + p - q)(r - p + q)$.
33. $(r + p + q)(r - p - q)$.
34. $(x + b + n)(x - b - n)$.
35. $(y + c + d)(y - c - d)$.
36. $(y + c + d)(y + c - d)$.
37. $(a + x + y)(a + x - y)$.
38. $(x^2 + 2x + 1)(x^2 + 2x - 1)$.
39. $(x^2 + 2x - 1)(x^2 - 2x + 1)$.
40. $(x^2 + 3x - 2)(x^2 - 3x + 2)$.
41. $(x^2 + 3x + 2)(x^2 - 3x + 2)$.
42. $(m^4 - 2m^2 + 1)(m^4 + 2m^2 + 1)$.
43. $(2x + 3y - 4z)(2x + 3y + 4z)$.
44. $(2x^2 - xy + 3y^2)(2x^2 + xy - 3y^2)$.
45. $(x^2 + xy + y^2)(x^2 - xy + y^2)$.

46. $[(a+b)+(c+d)][(a+b)-(c+d)]$

47. $(a+b+x+y)(a+b-x-y)$.

48. $(a+b+m-n)(a+b-m+n)$.

49. $(x-m+y-n)(x-m-y+n)$.

50. $(p-q+r+s)(p-q-r-s)$.

51. $(a-m-b-n)(a+m-b+n)$.

52. $(a+x+b-y)(a-x+b+y)$.

53. Find the product of 32×28.

SOLUTION

$$32 \times 28 = (30+2)(30-2)$$
$$= 30^2 - 2^2 = 900 - 4 = 896.$$

Find the product of

54. 31×29.	57. 48×52.	60. 98×102.
55. 42×38.	58. 57×63.	61. 99×101.
56. 69×71.	59. 95×85.	62. 95×105.

63. What is the square of 95?

SOLUTION

$$(a+b)(a-b) = a^2 - b^2. \qquad (1)$$

Transposing, etc., $$a^2 = (a+b)(a-b) + b^2. \qquad (2)$$

Let $a = 95$ and $b = 5$.

Equation (2) becomes $$95^2 = (95+5)(95-5) + 5^2$$
$$= 100 \times 90 + 25 = 9025.$$

64. What is the square of 48?

SOLUTION

Let $a = 48$ and $b = 2$.

Equation (2) becomes $$48^2 = (48+2)(48-2) + 2^2$$
$$= 50 \times 46 + 4 = 2304.$$

Square by a similar process:

65. 98.	67. 93.	69. 58.	71. 87.	73. 68.
66. 96.	68. 97.	70. 49.	72. 79.	74. 129.

98. The product of two binomials that have a common term.

$$(x+2)(x+5) = x^2 + 2x + 5x + 10$$
$$= x^2 + 7x + 10.$$
$$(x+2)(x-5) = x^2 + 2x - 5x - 10$$
$$= x^2 - 3x - 10.$$
$$(x-2)(x-5) = x^2 - 2x - 5x + 10$$
$$= x^2 - 7x + 10.$$
$$(x+a)(x-b) = x^2 + ax - bx - ab$$
$$= x^2 + (a-b)x - ab.$$

1. How many terms are alike in each pair of factors?

2. How is the first term of each product obtained from the binomial factors?

3. How is the third term of each product obtained from the factors?

4. How is the second term of the product in the first example obtained from the factors? in the second example? in the third example? in the fourth example?

5. How can the formation of the second, or middle term be described so as to apply to all of the examples?

99. PRINCIPLE. — *The product of two binomials that have a common term is the algebraic sum of the square of the common term, the common term multiplied by the algebraic sum of the unlike terms, and the algebraic product of the unlike terms.*

EXAMPLES

Expand by inspection:

1. $(x+5)(x+6)$.
2. $(x+7)(x+8)$.
3. $(x-7)(x+8)$.
4. $(x+7)(x-8)$.
5. $(x-5)(x-4)$.
6. $(x-3)(x-2)$.
7. $(x-5)(x-1)$.
8. $(x+5)(x+8)$.
9. $(p-4)(p+1)$.
10. $(r-3)(r-1)$.
11. $(m-6)(m+5)$.
12. $(m-2)(m+10)$.

13. $(n-8)(n-12)$.
14. $(n-6)(n+15)$.
15. $(x^2+5)(x^2-3)$.
16. $(x^3-7)(x^3+6)$.
17. $(x^4-3)(x^4+9)$.
18. $(x+c)(x+d)$.
19. $(m+a)(m+b)$.
20. $(r+a)(r-b)$.
21. $(s-a)(s+n)$.
22. $(x^n-5)(x^n+4)$.
23. $(x^n-a)(x^n-b)$.
24. $(y-2a)(y+3b)$.
25. $(z-4a)(z+3a)$.
26. $(2x+5)(2x+3)$.
27. $(2x-7)(2x+5)$.
28. $(3y-1)(3y+2)$.
29. $(4x^2+1)(4x^2-7)$.
30. $(ab-6)(ab+4)$.
31. $(x^2y^2-a)(x^2y^2+2a)$.
32. $(2m-ab)(2m+3ab)$.
33. $(5p-ac^2)(2ac^2+5p)$.
34. $(3xy+y^2)(y^2-xy)$.
35. $(\overline{a+b}+5)(\overline{a+b}+2)$.
36. $(\overline{a-b}-4)(\overline{a-b}+10)$.
37. $(\overline{x+y}-1)(\overline{x+y}+2)$.
38. $(\overline{x-y}-2)(\overline{x-y}-8)$.
39. $(\overline{x^2+x}-1)(\overline{x^2+x}+3)$.
40. $(\overline{2m+n}-3)(\overline{2m+n}+4)$.

By an extension of the method given above, the product of any two binomials may be written.

41. Expand $(3x+2y)(5x-4y)$.

SOLUTION

$$(3x+2y)(5x-4y) = 15x^2+10xy-12xy-8y^2$$
$$= 15x^2-2xy-8y^2.$$

Expand by inspection:

42. $(2x+5y)(3x+4y)$.
43. $(3x-4y)(2x+5y)$.
44. $(3a-6b)(2a+3b)$.
45. $(3a^2-1)(2a^2+3)$.
46. $(m^2+n)(2m^2-n)$.
47. $(a+2b)(c-2d)$.

Exercises

100. 1. In a certain family there are three children each of whom is 2 years older than the one next younger. When the youngest is x years old, what are the ages of the others? When the oldest is y years old, what are the ages of the others?

2. What two whole numbers are nearest to the whole number x?

3. Mary read 10 pages in a book, stopping at the top of page a. On what page did she begin to read?

4. A man made three purchases of a, b, and 2 dollars, respectively, and tendered a 10-dollar bill. Express the number of dollars change due him.

5. A sold B grain, hay, and potatoes for a, b, and c dollars, respectively; but some of the grain becoming damaged, and some of the potatoes having been frozen, he deducted $x + y$ dollars from B's indebtedness. If B offered a 100-dollar bill in payment, what was the amount due him in return?

6. What is the cost of 5 apples at b cents each? What will a apples cost at b cents each?

7. How many cents are there in a dollars? How many dimes are there in b dollars? in ax dollars?

8. If a man earns \$2 per day, how much will he earn in a days? in c days? in $a - c$ days?

9. How much will a man whose wages are a dollars per day earn in b days? in c days? in x days? in a days?

10. If a man earns a dollars per month and his expenses are b dollars per month, how much will he save in a year?

11. How far can a wheelman ride in a hours at the rate of b miles an hour? How far will he have ridden after a hours, if he stops c hours of the time to rest?

12. A has x dollars and B y dollars. If A gives B m dollars, how much will each then have?

13. The number 25 may be written $20 + 5$. Write the number whose first digit is x and second y.

14. A book contained x pages. If they averaged y lines to a page and z letters to a line, how many letters were there in the book?

15. How many square rods are there in a square field one of whose sides is $2\,b$ rods long? x rods long?

16. What is the number of square rods in a rectangular field whose length is 30 rods and width 20 rods? What will be the area in square rods, if the length is a rods and the width b rods?

17. A fence is built across a rectangular field so as to make the part on one side of the fence a square. If the field is a rods long and b rods wide, what is the area of each part?

18. A man who had s dollars bought b bales of hay at n cents a bale and a bushels of oats at m cents a bushel. How many cents had he left?

19. A speculator bought a car loads of wheat at m dollars a car, and sold b car loads of it at n dollars a car. How much did he lose by the transaction, if he sold the rest of the wheat for c dollars a car?

20. A sold a farm which had cost him n dollars an acre to two men, a acres to one and b acres to the other, at the uniform price of m dollars an acre. How much did he gain?

21. In a library there were $p + q$ volumes that averaged $p + q$ pages per volume, $p + q$ words per page, and 7 letters per word. How many letters were there in all these books?

22. A wheelman who had a journey of x miles to make rode the first a hours at the rate of b miles an hour, when he was obliged to stop c hours for repairs. After that he rode 2 miles an hour faster, so that he made the whole journey in 10 hours. What was the length of the journey?

23. A wheelman rode a hours at the rate of m miles an hour, then decreased his speed 5 miles an hour for 3 hours, and finished his journey in b hours more, increasing his first rate 2 miles an hour. How far did he ride?

If $a = 4$, $b = 2$, and $m = 10$, how many miles did he ride, and in what time did he accomplish the journey?

DIVISION

101. 1. Since $+2$ times $+10$ is $+20$, if $+20$ is divided by $+10$, what is the sign of the quotient?

2. What is the sign of the quotient when a positive number is divided by a positive number?

3. Since $+2$ times -10 is -20, if -20 is divided by -10, what is the sign of the quotient? if -40 is divided by -5?

4. What is the sign of the quotient when a negative number is divided by a negative number?

5. What is the sign of the quotient when the dividend and divisor have like signs?

6. Since $+2$ times -10 is -20, if -20 is divided by $+2$, what is the sign of the quotient? if -20 is divided by $+5$?

7. Since -2 times -10 is $+20$, if $+20$ is divided by -2, what is the sign of the quotient? if $+20$ is divided by -4?

8. What is the sign of the quotient when the dividend and divisor have unlike signs?

9. How many times is $2a$ contained in $6a$? in $10a$?
How is the coefficient of the quotient obtained?

10. Since $a^3 \times a^5 = a^8$, if a^8 is divided by a^3, what is the quotient? What is the quotient, if a^8 is divided by a^5?
What is the quotient, if b^7 is divided by b^3? by b^4?
How is the exponent of a number in the quotient obtained?

11. What is the exponent of a in the quotient of $a^4 \div a^4$? of $a^3 \div a^3$? How many times is a^4 contained in a^4? a^3 in a^3?

12. What is the value of any expression whose exponent is 0?

102. In multiplication two numbers are given and their product is to be found. The *inverse* process, finding one of two numbers when their product and the other number are given, is called **Division.**

$10 \div 2 = 5$ and $D \div d = q$

are inverses of

$5 \times 2 = 10$ and $q \times d = D$.

The dividend corresponds to the product, the divisor to the multiplier, and the quotient to the multiplicand. Hence, the *quotient* may be defined as *that number which multiplied by the divisor produces the dividend.*

The quotient of a divided by b, indicated by $(a \div b)$, or $\frac{a}{b}$, is defined for all values of a and b by the relation

$$\frac{a}{b} \times b = a.$$

103. PRINCIPLES. — 1. **Law of Signs.** — *The sign of the quotient is + when the dividend and divisor have like signs, and — when they have unlike signs.*

2. **Law of Coefficients.** — *The coefficient of the quotient is equal to the coefficient of the dividend divided by that of the divisor.*

3. **Law of Exponents.** — *The exponent of a letter in the quotient is equal to its exponent in the dividend diminished by its exponent in the divisor.*

An expression whose exponent is 0 is equal to 1.

The Law of Signs may be established as follows:

Since $+a \times +b = +ab$, $+ab \div +b = +a$.
Since $+a \times -b = -ab$, $-ab \div -b = +a$.
Since $-a \times +b = -ab$, $-ab \div +b = -a$.
Since $-a \times -b = +ab$, $+ab \div -b = -a$.

The Law of Exponents or the Index Law for Division may be established as follows, m and n being *positive integers* and m being greater than n:

By § 24, $a^m = a \times a \times a \cdots$ to m factors,

$a^n = a \times a \times a \cdots$ to n factors;

$\therefore a^m \div a^n = (a \times a \times a \cdots$ to m factors$) \div (a \times a \times a \cdots$ to n factors$)$

$= a \times a \times a \cdots$ to $(m - n)$ factors.

Hence, $a^m \div a^n = a^{m-n}$.

104. Commutative, Associative, and Distributive Laws for Division.

1. The Commutative Law may be established as follows:

Since, by the definition of division, § 102, $a = a \div c \times c$,

$$a \times b \div c = a \div c \times c \times b \div c$$

§ 82, $$= a \div c \times b \times c \div c$$

$$= a \div c \times b. \qquad (1)$$

Also, § 102, $$a \div b \div c = a \div c \times c \div b \div c$$

by notation, § 29, $$= (a \div c \times c \div b) \div c$$

by (1), $$= (a \div c \div b \times c) \div c$$

by notation, $$= a \div c \div b \times c \div c$$

$$= a \div c \div b. \qquad (2)$$

The Commutative Law for division is expressed by (2).

(2) may be written $\frac{a}{b} \div c = \frac{a}{c} \div b$. (1) may be written $\frac{ab}{c} = \frac{a}{c} \times b$.

It follows from (1) and (2) that *in a succession of multiplications and divisions the multipliers and divisors may be arranged in any order.*

2. The Associative Law may be established as follows:

By the Commutative Law just proved,

$$a \times b \div c = b \div c \times a$$

by notation, § 29, $$= (b \div c) \times a$$

by the Commutative Law, $$= a \times (b \div c). \qquad (3)$$

Also $$a \div b \div c = b \times c \div (b \times c) \times a \div b \div c$$

by the Commutative Law, $$= b \div b \times c \div c \times a \div (b \times c)$$

$$= a \div (b \times c). \qquad (4)$$

The Associative Law for division is expressed by (4).

(4) may be written $\frac{a}{b} \div c = \frac{a}{bc}$. (3) may be written $\frac{ab}{c} = a \times \frac{b}{c}$.

It follows from (3) and (4) that *in a succession of multiplications and divisions the multipliers and divisors may be grouped in any manner, each element keeping its own sign, × or ÷, if the sign × precedes the sign of grouping, but changing it, if the sign ÷ precedes the sign of grouping.*

3. The Distributive Law may be established as follows:

§ 85, $$(\overline{a \div m} + \overline{b \div m}) \times m = \overline{a \div m} \times m + \overline{b \div m} \times m$$

$$= a + b.$$

Dividing both members by m,

$$\overline{a \div m} + \overline{b \div m} = (a + b) \div m;$$

that is, $$\frac{a + b}{m} = \frac{a}{m} + \frac{b}{m}.$$

105. The **Reciprocal** of a number is 1 divided by the number.

The reciprocal of 5 is $\frac{1}{5}$; of b, $\frac{1}{b}$; of $(a+b)$, $\frac{1}{a+b}$.

106. $a \div b = a \times 1 \div b$

by the Associative Law, $= a \times (1 \div b)$.

Hence, *dividing by a number is equivalent to multiplying by the reciprocal of the number.*

107. To divide a monomial by a monomial.

EXAMPLES

1. Divide $-18\,a^5b^3$ by $6\,ab^2$.

PROCESS

$6\,ab^2)\underline{-18\,a^5b^3}$

$\quad -3\,a^4b$

EXPLANATION. — Since the dividend and divisor have unlike signs, the sign of the quotient is $-$ (Prin. 1).

Then, -18 divided by 6 is -3 (Prin. 2); a^5 divided by a is a^4 (Prin. 3); and b^3 divided by b^2 is b (Prin. 3). Therefore, the quotient is $-3\,a^4b$.

RULE. — *Divide the numerical coefficient of the dividend by the numerical coefficient of the divisor, and to the result annex the letters, each with an exponent equal to its exponent in the dividend minus its exponent in the divisor.*

Write the sign + before the quotient when the dividend and divisor have like signs, and the sign − when they have unlike signs.

	2.	3.	4.	5.	6.
Divide	$12\,x$	$-12\,x^2y^2$	$35\,xy^3$	$-14\,x^3y^2$	$-26\,a^2b^3c^2$
By	$4\,x$	$4\,x^2y^2$	$-7\,xy$	$-2\,x^2y$	$13\,ab^2c$

Find the quotient of

7. $28\,a^4b^2c \div -7\,abc$.
8. $-16\,x^3y^3z^3 \div 4\,xyz$.
9. $-36\,a^4m^2n^3 \div -9\,m^2n^2$.
10. $-14\,x^6y^3z^4 \div 7\,x^4y^3z^2$.
11. $-27\,m^7n^8p^9 \div 9\,m^2n^3p^6$.
12. $-39\,q^3r^2p \div -13\,qp$.

108. To divide a polynomial by a monomial.

EXAMPLES

1. Divide $5\,x^4y^4 - 10\,x^3y^5 + 5\,x^2y^6$ by $5\,x^2y^3$.

PROCESS. § 104, 3, $5\,x^2y^3)\underline{5\,x^4y^4 - 10\,x^3y^5 + 5\,x^2y^6}$

$\quad x^2y - 2\,xy^2 + y^3$

RULE. — *Divide each term of the dividend by the divisor, and find the algebraic sum of the partial quotients.*

Find the quotient of

2. $\dfrac{4\,a^2b^3 - 12\,a^3b^2 + 16\,a^4b}{4\,a^2b}$.

3. $\dfrac{24\,a^6b^2 + 32\,a^5b^3 - 40\,a^4b^4}{8\,a^4b^2}$.

4. $\dfrac{-35\,x^2y^3z^4 + 45\,x^4y^3z^2}{5\,x^2y^2z}$.

5. $\dfrac{-39\,x^3y^4z^6 + 65\,x^2y^5z^7}{-13\,x^2y^4z^6}$.

6. $\dfrac{4\,m^3n - 8\,m^2n^2 + 4\,mn^3}{4\,mn}$.

7. $\dfrac{5\,x^4y - 10\,x^3y^2 + 20\,x^2y^3}{5\,xy}$.

8. $\dfrac{-a - b - c - d - e}{-1}$.

9. $\dfrac{-a - a^2b - a^3c - a^4d - a^5e}{-a}$.

10. $\dfrac{25\,r^8s^6 - 125\,r^6s^8 - 75\,r^4s^{10}}{5\,r^4s^6}$.

11. $\dfrac{27\,c^5d^2 - 39\,c^4d^3 - 42\,c^3d^4}{3\,c^3d^2}$.

12. $(34\,a^2x^6y^2 - 51\,a^4x^4y^4 - 68\,a^6x^2y^6) \div 17\,a^2x^2y^2$.

13. $(8\,a^7b^3 - 28\,a^6b^4 - 16\,a^5b^5 + 4\,a^4b^6) \div 4\,a^4b^3$.

14. $[a\,(b-c)^3 - b\,(b-c)^2 + c(b-c)] \div (b-c)$.

15. $[(x-y) - 3\,(x-y)^2 + 4\,x(x-y)^3] \div (x-y)$.

16. $(x^a - 2\,x^{a+1} - 5\,x^{a+2} - x^{a+3} + 3\,x^{a+4}) \div x^a$.

17. $(y^{n+1} - 2\,y^{n+2} - y^{n+3} - 3\,y^{n+4} + y^{n+5}) \div y^{n+1}$.

18. $(x^n - x^{n-1} + x^{n-2} - x^{n-3} + x^{n-4} - x^{n-5}) \div x^2$.

109. To divide a polynomial by a polynomial.

EXAMPLES

1. Divide $3\,x^2 + 35 + 22\,x$ by $x + 5$.

	PROCESS		TEST
	$3\,x^2 + 22\,x + 35$	$x + 5$	$+60 \div +6$
$3\,x\,(x+5)$ . . .	$3\,x^2 + 15\,x$	$3\,x + 7$	$= +10$
	$7\,x + 35$		
$7\,(x+5)$ . .	$7\,x + 35$		

EXPLANATION. — For convenience, the divisor is written at the right of the dividend, and both are arranged according to the descending powers of x.

Since the dividend is the product of the quotient and divisor, it is the algebraic sum of all the products formed by multiplying each term of the quotient by each term of the divisor. Therefore, the term of highest degree in the dividend is the product of the terms of highest degree in the quotient and divisor. Hence, if $3x^2$, the first term of the dividend as arranged, is divided by x, the first term of the divisor, the result, $3x$, is the term of highest degree, or the first term, of the quotient.

Subtracting $3x$ multiplied by $(x + 5)$, or $3x$ times $(x + 5)$ from the dividend, the remainder is $7x + 35$.

Since the dividend is the algebraic sum of the products of each term of the quotient multiplied by the divisor and since the product of the first term of the quotient multiplied by the divisor has been canceled from the dividend, the remainder, or *new dividend*, is the product of the other part of the quotient, multiplied by the divisor.

Proceeding, then, as before, $7x \div x = 7$, the next term of the quotient. 7 multiplied by $(x + 5)$, or $(x + 5)$ multiplied by 7 equals $7x + 35$. Subtracting, there is no remainder. Hence, all of the terms of the quotient have been obtained, and the quotient is $3x + 7$.

TEST. — Let $x = 1$.

Dividend	$= 3x^2 + 22x + 35$	$= 3 + 22 + 35$	$= +60.$
Divisor	$= x + 5$	$= 1 + 5$	$= +6.$
Quotient should be equal to			$+10.$
Quotient	$= 3x + 7$	$= 3 + 7$	$= +10.$

Similarly, the result may be tested by substituting any other value for x. When the value substituted for x gives the result $0 \div 0$ or 0 for a divisor, some other value should be tried.

RULE. — *Arrange both dividend and divisor according to the ascending or the descending powers of a common letter.*

Divide the first term of the dividend by the first term of the divisor, and write the result for the first term of the quotient.

Multiply the whole divisor by this term of the quotient, and subtract the product from the dividend. The remainder will be a new dividend.

Divide the new dividend as before, and continue to divide in this way until the first term of the divisor is not contained in the first term of the new dividend.

If there is a remainder after the last division, write it over the divisor in the form of a fraction, and add the fraction to the part of the quotient previously obtained.

2. Divide $2a^4 - 5a^3b + 6a^2b^2 - 4ab^3 + b^4$ by $a^2 - ab + b^2$.

PROCESS

$$
\begin{array}{l|l}
2a^4 - 5a^3b + 6a^2b^2 - 4ab^3 + b^4 & a^2 - ab + b^2 \\
\underline{2a^4 - 2a^3b + 2a^2b^2} & \underline{2a^2 - 3ab + b^2} \\
\quad -3a^3b + 4a^2b^2 - 4ab^3 & \\
\quad \underline{-3a^3b + 3a^2b^2 - 3ab^3} & \\
\qquad a^2b^2 - ab^3 + b^4 & \\
\qquad \underline{a^2b^2 - ab^3 + b^4} &
\end{array}
$$

TEST

$0 \div 1 = 0$

3. Divide $a^4 + 9a^2 + 81$ by $a^2 - 3a + 9$.

PROCESS

$$
\begin{array}{l|l}
a^4 + 9a^2 + 81 & a^2 - 3a + 9 \\
\underline{a^4 - 3a^3 + 9a^2} & \underline{a^2 + 3a + 9} \\
\quad 3a^3 + 81 & \\
\quad \underline{3a^3 - 9a^2 + 27a} & \\
\qquad 9a^2 - 27a + 81 & \\
\qquad \underline{9a^2 - 27a + 81} &
\end{array}
$$

TEST

$91 \div 7 = 13$

Divide, and test the results:

4. $x^2 - x - 20$ by $x - 5$.

5. $x^2 + 7x + 12$ by $x + 3$.

6. $m^2 - 3m - 18$ by $m - 6$.

7. $l^4 - 6l^2 - 16$ by $l^2 + 2$.

8. $cd - d^2 + 2c^2$ by $c + d$.

9. $x^2 - 11x + 10$ by $x - 10$.

10. $x^2 + 15x + 54$ by $x + 6$.

11. $r^{2n} + 11r^n + 30$ by $r^n + 6$.

12. $a^2m^4 - 4am^3 + 3m^2$ by $am - 1$.

13. $6a^2 + 13ab + 6b^2$ by $3a + 2b$.

14. $a^4 + 16 + 4a^2$ by $2a + a^2 + 4$.

15. $a^8 + a^6 + a^4 + a^2 + 3a - 1$ by $a + 1$.

16. $20x^2y - 25x^3 - 18y^3 + 27xy^2$ by $6y - 5x$.

17. $ax^3 - a^2x^2 - bx^2 + b^2$ by $ax - b$.

18. $a^5 - 41a - 120$ by $a^2 + 4a + 5$.

19. $x^5 - 61x - 60$ by $x^2 - 2x - 3$.

20. $25x^5 - x^3 - 8x - 2x^2$ by $5x^2 - 4x$.

21. $4y^4 - 9y^2 + 6y - 1$ by $2y^2 + 3y - 1$.

22. $a^4 - 4a^3x + 6a^2x^2 - 4ax^3 + x^4$ by $a^2 - 2ax + x^2$.

23.

$$
\begin{array}{l|l}
a^5 - 1 & a + 1 \\
\underline{a^5 + a^4} & \overline{a^4 - a^3 + a^2 - a + 1 + \dfrac{-2}{a+1}} \\
\quad -a^4 - 1 & \\
\quad \underline{-a^4 - a^3} & \\
\qquad\quad a^3 - 1 & \\
\qquad\quad \underline{a^3 + a^2} & \\
\qquad\qquad -a^2 - 1 & \\
\qquad\qquad \underline{-a^2 - a} & \\
\qquad\qquad\qquad a - 1 & \\
\qquad\qquad\qquad \underline{a + 1} & \\
\qquad\qquad\qquad\quad -2 &
\end{array}
$$

24.

$$
\begin{array}{l|l}
x^3 + x - 25 & x - 3 \\
\underline{x^3 - 3x^2} & \overline{x^2 + 3x + 10 + \dfrac{5}{x-3}} \\
\quad 3x^2 + x & \\
\quad \underline{3x^2 - 9x} & \\
\qquad\quad 10x - 25 & \\
\qquad\quad \underline{10x - 30} & \\
\qquad\qquad\quad 5 &
\end{array}
$$

25.

$$
\begin{array}{l|l}
x^4 - 3x^3 + x^2 + 2x - 1 & x^2 - x - 2 \\
\underline{x^4 - x^3 - 2x^2} & \overline{x^2 - 2x + 1 + \dfrac{-x+1}{x^2 - x - 2}} \\
\quad -2x^3 + 3x^2 + 2x & \\
\quad \underline{-2x^3 + 2x^2 + 4x} & \\
\qquad\qquad x^2 - 2x - 1 & \\
\qquad\qquad \underline{x^2 - x - 2} & \\
\qquad\qquad\quad -x + 1 &
\end{array}
$$

Divide:

26. $m^5 + n^5$ by $m + n$.

27. $x^5 + 32$ by $x + 2$.

28. $x^6 + y^6$ by $x^2 + y^2$.

29. $a^6 + 5a^5 - a^3 + 2a + 3$ by $a - 1$.

30. $2n^5 - 4n^4 - 3n^3 + 7n^2 - 3n + 2$ by $n - 2$.

31. $x^3 + y^3 + z^3 - 3xyz$ by $x + y + z$.

32. $m^3 + n^3 + x^3 + 3m^2n + 3mn^2$ by $m + n + x$.

33. $a^3 - 6a^2 + 12a - 8 - b^3$ by $a - 2 - b$.

34. $y^5 + 3y^4 + 5y^3 + 3y^2 + 3y + 5$ by $y + 1$.

35. $2x^8 - x^7 + 2x^4 - x^2 + x^5 + 5$ by $x + 1$.

36. $x^7 + 2x^6 - 2x^4 + 2x^2 - 1$ by $x + 1$.

37. $a^3 - 2a^2c + 4ac^2 - ax^2 - 4c^2x + 2cx^2$ by $a - x$.

38. $a^3 - b^3 + c^3 + 3abc$ by $a^2 + b^2 + c^2 + ab - ac + bc$.

39. $x^n + y^n$ by $x + y$ to five terms of the quotient.

40. $x^6 - 6x + 5$ by $x^2 - 2x + 1$, using detached coefficients

PROCESS

$$
\begin{array}{l|l}
1+0+0+0+0-6+5 & 1-2+1 \\
\underline{1-2+1} & \underline{1+2+3+4+5} \\
\quad 2-1+0 & x^4+2x^3+3x^2+4x+5 \\
\quad \underline{2-4+2} & \\
\qquad 3-2+0 & \\
\qquad \underline{3-6+3} & \\
\qquad\quad 4-3-6 & \\
\qquad\quad \underline{4-8+4} & \\
\qquad\qquad 5-10+5 & \\
\qquad\qquad \underline{5-10+5} &
\end{array}
$$

Divide, using detached coefficients when convenient:

41. $x^8 + 8x + 7$ by $x^2 + 2x + 1$.

42. $a^6 + 38a + 12$ by $a + 2$.

43. $m^5 - 19m - 6$ by $m + 2$.

44. $m^7 - 32m^2 - 4m + 8$ by $m - 2$.

45. $a^6 + 27a^2 - 9a - 10$ by $a^2 - 3a + 5$.

46. $21x^4 - 29x^3 - 8x^2 + 6x + 4$ by $3x - 2$.

47. $2x^4 - 11x^3 + 16x^2 - 12x + 9$ by $2x - 3$.

48. $30x^4 - 62x^3 + 60x^2 - 36x + 8$ by $5x - 2$.

49. $27x^4 - 33x^3 + 46x^2 - 119x + 55$ by $9x - 5$.

50. $x^7 - 2x^5 - x^3 - 10x - 36$ by $x - 2$.

51. $x^4 - 4x^3 + 5x^2 - 4x + 1$ by $x^2 - x + 1$.

52. $x^4 - x^3 - 10x^2 + 7x + 15$ by $x^2 - 2x - 3$.

53. $2x^4 + 7x^3 - 27x^2 - 8x + 16$ by $x^2 + 5x - 4$.

54. $28x^4 + 6x^3 + 6x^2 - 6x - 2$ by $4x^2 + 2x + 2$.

55. $7x^3 - 6x^4 + 2x^2 - x - 2$ by $6x^2 + 5x + 2$.

56. $25x^2 - 20x^3 + 3x^4 + 16x - 6$ by $3x^2 - 8x + 2$.

57. $3x^4 + 7x^3 + 6x^2 + 3x - 1$ by $x^2 + x + 1$.

58. $6x^4 - 23x^3 + 30x^2 - 18x + 4$ by $2x^2 - 5x + 2$.

59. $24x^4 + 32x^3 - 16x^2 - 25x - 4$ by $6x^2 - x - 4$.

60. $x^5 - 2x^4 + \frac{1}{12}x^3 + \frac{2}{5}x^2 + \frac{1}{15}x + \frac{5}{4}$ by $x - \frac{3}{2}$.

61. $x^5 - \frac{5}{4}x^4 + \frac{29}{24}x^3 - \frac{31}{24}x^2 + \frac{5}{6}x - \frac{1}{4}$ by $x - \frac{3}{4}$.

62. $x^6 - \frac{1}{6}x^5 + \frac{5}{6}x^4 - \frac{13}{36}x^3 + \frac{37}{36}x^2 - \frac{17}{36}x + \frac{7}{24}$ by $x^2 - \frac{2}{3}x + \frac{1}{2}$.

63. $\frac{1}{8}x^3 + \frac{1}{27}y^3 + z^3 - \frac{1}{2}xyz$ by $\frac{1}{2}x + \frac{1}{3}y + z$.

64. $\dfrac{1}{1+x}$ to five terms.

65. $\dfrac{1}{1-x}$ to five terms.

66. $x^{3n-3} + y^{3n+3}$ by $x^{n-1} + y^{n+1}$.

SPECIAL CASES IN DIVISION

110. By actual division,

1.
$$\begin{cases} \dfrac{x^2-y^2}{x-y} = x+y. \\ \dfrac{x^3-y^3}{x-y} = x^2+xy+y^2. \\ \dfrac{x^4-y^4}{x-y} = x^3+x^2y+xy^2+y^3. \\ \dfrac{x^5-y^5}{x-y} = x^4+x^3y+x^2y^2+xy^3+y^4. \end{cases}$$

From the above we infer that the difference of the same powers of two numbers is divisible by the difference of the numbers.

2.
$$\begin{cases} \dfrac{x^2-y^2}{x+y} = x-y. \\ \dfrac{x^3-y^3}{x+y} = x^2-xy+y^2, \text{ Rem., } -2y^3. \\ \dfrac{x^4-y^4}{x+y} = x^3-x^2y+xy^2-y^3. \\ \dfrac{x^5-y^5}{x+y} = x^4-x^3y+x^2y^2-xy^3+y^4, \text{ Rem., } -2y^5. \end{cases}$$

From the above we infer that the difference of the same powers of two numbers is divisible by the sum of the numbers only when the powers are even.

3.
$$\begin{cases} \dfrac{x^2+y^2}{x-y} = x+y, \text{ Rem., } 2y^2. \\ \dfrac{x^3+y^3}{x-y} = x^2+xy+y^2, \text{ Rem., } 2y^3. \\ \dfrac{x^4+y^4}{x-y} = x^3+x^2y+xy^2+y^3, \text{ Rem., } 2y^4. \\ \dfrac{x^5+y^5}{x-y} = x^4+x^3y+x^2y^2+xy^3+y^4, \text{ Rem., } 2y^5. \end{cases}$$

From the above we infer that the sum of the same powers of two numbers is not divisible by the difference of the numbers.

4. $$\begin{cases} \dfrac{x^2+y^2}{x+y} = x-y, \quad \text{Rem., } 2y^2. \\ \dfrac{x^3+y^3}{x+y} = x^2-xy+y^2. \\ \dfrac{x^4+y^4}{x+y} = x^3-x^2y+xy^2-y^3, \quad \text{Rem., } 2y^4. \\ \dfrac{x^5+y^5}{x+y} = x^4-x^3y+x^2y^2-xy^3+y^4. \end{cases}$$

Observe that the sum of the same powers of two numbers is divisible by the sum of the numbers only when the powers are odd.

111. Hence, when n is a positive integer.

PRINCIPLES. — 1. $x^n - y^n$ *is always divisible by* $x - y$.

2. $x^n - y^n$ *is divisible by* $x + y$ *only when* n *is even.*

3. $x^n + y^n$ *is never divisible by* $x - y$.

4. $x^n + y^n$ *is divisible by* $x + y$ *only when* n *is odd.*

112. From § 110, the following *law of signs* may be readily inferred:

When $x - y$ *is the divisor, the signs in the quotient are plus.*

When $x + y$ *is the divisor, the signs in the quotient are alternately plus and minus.*

113. The following *law of exponents* may also be inferred:

When $x^n \pm y^n$ *is divided by* $x \pm y$, *the quotient is homogeneous, the exponent of* x *decreasing and that of* y *increasing by* 1 *in each successive term.*

114. Proofs of preceding principles.

PRINCIPLE 1

$$\begin{array}{rl|l} & x^n - y^n & x - y \\ & \underline{x^n - x^{n-1}y} & \overline{x^{n-1} + x^{n-2}y + \cdots} \\ \text{1st Rem.,} & x^{n-1}y - y^n & \\ & \underline{x^{n-1}y - x^{n-2}y^2} & \\ \text{2d Rem.,} & x^{n-2}y^2 - y^n & \\ \cdot\ \cdot\ \cdot & \cdot\ \cdot\ \cdot\ \cdot\ \cdot\ \cdot\ \cdot\ \cdot\ \cdot\ \cdot\ \cdot\ \cdot & \\ n\text{th Rem.,} & x^{n-n}y^n - y^n & \\ \text{or} & x^0y^n - y^n = y^n - y^n = 0 & \end{array}$$

By dividing until several remainders are obtained, it is found that the first term of the first remainder is $x^{n-1}y$; of the second, $x^{n-2}y^2$; of the third, $x^{n-3}y^3$; of the fourth, $x^{n-4}y^4$; and consequently of the nth, $x^{n-n}y^n$. But $x^{n-n} = x^0$, which, § 103, equals 1. Therefore, the first term of the nth remainder reduces to y^n.

Since the second term of the nth remainder is $-y^n$, the entire nth remainder is $y^n - y^n$, or 0; that is, there is no remainder, and the division is exact.

Therefore, $x^n - y^n$ is divisible by $x - y$ when x and y represent any two numbers and n is any positive integer.

Principle 2

$$
\begin{array}{lll}
 & x^n - y^n & \quad \big|\, x + y \\
 & \underline{x^n + x^{n-1}y} & \quad \big|\, \overline{x^{n-1} - x^{n-2}y + x^{n-3}y^2 - x^{n-4}y^3 + \cdots} \\
\text{1st Rem.,} & \quad - x^{n-1}y - y^n & \\
 & \quad \underline{- x^{n-1}y - x^{n-2}y^2} & \\
\text{2d Rem.,} & \qquad x^{n-2}y^2 - y^n & \\
 & \qquad \underline{x^{n-2}y^2 + x^{n-3}y^3} & \\
\text{3d Rem.,} & \qquad\quad - x^{n-3}y^3 - y^n & \\
 & \qquad\quad \underline{- x^{n-3}y^3 - x^{n-4}y^4} & \\
\text{4th Rem.,} & \qquad\qquad x^{n-4}y^4 - y^n &
\end{array}
$$

Suggestion. — Since the second term of each remainder is negative, no remainder can reduce to 0 unless its first term is positive. Show for what values of n such remainders reduce to 0 when n is a positive integer.

Prove Principle 3.

Prove Principle 4.

Examples

Write by inspection the quotient of

1. $\dfrac{a^3 - b^3}{a - b}$.
2. $\dfrac{m^5 + n^5}{m + n}$.
3. $\dfrac{x^6 - y^6}{x + y}$.
4. $\dfrac{r^7 - s^7}{r - s}$.
5. $\dfrac{a^9 + b^9}{a + b}$.
6. $\dfrac{m^8 - n^8}{m - n}$.
7. $\dfrac{n^3 - 1}{n - 1}$.
8. $\dfrac{c^5 - d^5}{c - d}$.
9. $\dfrac{1 + a^5}{1 + a}$.
10. $\dfrac{x^6 - 1}{x + 1}$.
11. $\dfrac{x^2 - 9}{x + 3}$.
12. $\dfrac{a^3 - 8}{a - 2}$.
13. $\dfrac{x^5 - 32}{x - 2}$.
14. $\dfrac{c^3 + 27}{c + 3}$.
15. $\dfrac{a^7 + 128}{a + 2}$.

16. Find five exact binomial divisors of $a^6 - x^6$.

SOLUTION

$a^6 - x^6$ is divisible by $a - x$ (Prin. 1).

$a^6 - x^6$ is divisible by $a + x$ (Prin. 2).

Since $a^6 - x^6 = (a^2)^3 - (x^2)^3$, $a^6 - x^6$ may be regarded as the difference of two odd powers, and is, therefore, divisible by $a^2 - x^2$ (Prin. 1).

Since $a^6 - x^6 = (a^3)^2 - (x^3)^2$, $a^6 - x^6$ may be regarded as the difference of two squares, and is, therefore, divisible by $a^3 - x^3$ (Prin. 1).

Since $a^6 - x^6 = (a^3)^2 - (x^3)^2$, $a^6 - x^6$ may be regarded as the difference of two squares, and is, therefore, divisible by $a^3 + x^3$ (Prin. 2).

Therefore, the exact binomial divisors of $a^6 - x^6$ are $a - x$, $a + x$, $a^2 - x^2$, $a^3 - x^3$, and $a^3 + x^3$.

17. Find an exact binomial divisor of $a^6 + x^6$.

SOLUTION

Since $a^6 + x^6 = (a^2)^3 + (x^2)^3$, $a^6 + x^6$ may be regarded as the sum of the cubes of a^2 and x^2, and is, therefore, divisible by $a^2 + x^2$ (Prin. 4).

Find exact binomial divisors:

18. $a^2 - m^2$.	**24.** $x^7 + a^7$.	**30.** $a^4 - b^4$, four.
19. $a^3 - m^3$.	**25.** $a^{10} + b^{10}$.	**31.** $a^6 - 1$, five.
20. $b^3 + x^3$.	**26.** $a^{10} + b^5$.	**32.** $a^8 - b^8$, six.
21. $x^5 - a^5$.	**27.** $a^{12} + b^{12}$.	**33.** $a^{10} - b^{10}$, five.
22. $c^5 + n^5$.	**28.** $a^3 - 27$.	**34.** $a^{16} - b^{16}$, eight.
23. $a^6 + b^6$.	**29.** $a^6 - 27$.	**35.** $a^{12} - b^{12}$, nine.

EQUATIONS AND PROBLEMS

115. 1. Find the value of x in the equation $bx - b^2 = cx - c^2$.

SOLUTION

$$bx - b^2 = cx - c^2.$$

Transposing, $$bx - cx = b^2 - c^2.$$

Collecting coefficients of x, $$(b - c)x = b^2 - c^2.$$

Dividing by $b - c$, $$x = \frac{b^2 - c^2}{b - c} = b + c.$$

2. Find the value of x in the equation $x - a^3 = 2 - ax$.

SOLUTION

$x - a^3 = 2 - ax.$

Transposing, $ax + x = a^3 + 2.$

Collecting coefficients of x, $(a + 1)x = a^3 + 2.$

Dividing by $a + 1$, $x = \frac{a^3 + 2}{a + 1} = a^2 - a + 1 + \frac{1}{a + 1}.$

Solve the following equations:

3. $7a - 10 = a^2 - ax + 5x.$
4. $x - 1 - c = cx - c^3 - c^4.$
5. $2m^3 - mx + nx - 2n^3 = 0.$
6. $cx - c^3 - d^3 + dx = 0.$
7. $a^2 - ax - 2ab + bx + b^2 = 0.$
8. $2n^2 + 5n + x = n^3 - nx - 2.$
9. $n^2x - 3m^2n^3 + nx + 3m^2 + x = 0.$
10. $a^2x - a^3 + 2a^2 + 5x - 5a + 10 = 0.$
11. $3ab - a^2 - 2bx = 2b^2 - ax.$
12. $9a^2 + 4mx = -(3ax - 16m^2).$
13. $cy - c^4 - 2c^3 - 2c^2 = 2c - y + 1.$
14. $ay - 2by + 3cy = a - 2b + 3c.$
15. $z + 6n^4 - 4n^3 = 1 - 3nz + 2n - n^2.$
16. $x - 3b^2 - 192b^2c^3 - 4cx + 16c^2x = 0.$
17. $8b^3 - 18b^2 - 57b - 2bx + 7x + 77 = 0.$

Solve the following problems:

18. A drover, who had 5 times as many sheep as oxen and $\frac{1}{2}$ as many oxen as horses, sold all for \$2300, — the horses at \$35 a head, the oxen at \$25 a head, and the sheep at \$4 a head. What was the number of each?

19. A man paid yearly a certain amount of money for taxes and twice that amount for improvements, and received for rent 3 times as much as he paid out for improvements. If his net gain per year was \$300, what were his taxes per year?

20. A owed B a certain sum of money and C twice as much. D owed A 3 times as much as A owed B, and E owed A 5 times the sum A owed B. A found that if he could settle with them all he would have \$5000. How much did he owe B and C?

21. After taking 3 times a number from 11 times the number and adding to the remainder 7 times the number, the result was 12 less than 117. What was the number?

22. A merchant failed in business, owing A 3 times as much as B, C twice as much as A, and D as much as A and B. If the entire debt to A, B, C, and D was $28,000, how much did he owe each?

23. At a certain election there were three candidates for the office of mayor. A received half as many votes as B and 4 times as many as C. If the total vote lacked 25 votes of being 2300, how many votes did each receive?

24. Three boys together had 140 marbles. If the second boy had twice as many as the first and half as many as the third, how many had each?

25. In a certain school of 600 students there were twice as many Sophomores and 3 times as many Freshmen as Juniors, and 40 more Seniors than Juniors. How many students were there in each class?

26. Divide 25 into three parts such that the first is one third of the second and 5 greater than the third.

27. A, B, and C divided $40 so that for every $2 A received, B and C each received $3. What was the share of each?

28. Divide $2200 among A, B, and C, so that B shall have twice as much as A and $200 less than C.

29. Divide $351 among three persons so that for every dime the first receives the second shall receive 25 cents and the third a dollar.

30. A man gave equal amounts of money to a school and to a library, and $\frac{1}{3}$ the same amount to a hospital. If to all he gave $28,000, what sum did he give each?

31. When wheat was worth 85 cents a bushel, oats 35 cents a bushel, and corn 60 cents a bushel, a man bought a quantity of wheat, oats, and corn for $67. If he bought twice as many bushels of oats as of wheat, and also three times as many bushels of corn as of wheat, how many bushels of each did he buy?

REVIEW

116. Simplify:

1. $x^3+2a\sqrt{xy}-3mn+4mn-4x^3-5a\sqrt{xy}+3x^3+4a\sqrt{xy}-2mn.$

2. $5x^3+3x^2y+4xy^2-y^3-\sqrt{x}+6y^3+xy^2-\sqrt{y}-5x^2y-7x^3-5xy^2+x^3+2\sqrt{x}+x^2y-6y^3+\sqrt{y}-\sqrt{x}-2x^2y+3xy^2+x^3.$

3. $(\frac{5}{2}a-3bc+\frac{1}{2}c-7b)-(\frac{3}{2}a+\frac{1}{2}bc+\frac{1}{4}c+3b).$

4. $(a^2x^2-4ay+4bc+ax)-(b^2x^2-4by-ax+bc).$

5. $x^5-(x^5-5x^4y+10x^3y^2-10x^2y^3+5xy^4-y^5).$

6. $\frac{1}{2}a-\frac{5}{6}x-(\frac{3}{4}a-\frac{1}{2}x)-(3b-\frac{11}{4}x-\frac{2}{3}a)+\frac{1}{6}a.$

7. $(a^3+3a^2y+3ay^2)(a^2-2ay+y^2).$

8. $(x^{2n}+2x^ny^n+y^{2n})(x^{2n}-2x^ny^n+y^{2n}).$

9. $(\frac{1}{4}x^2+\frac{1}{3}xy+\frac{1}{9}y^2)(\frac{1}{4}x^2-\frac{1}{3}xy+\frac{1}{9}y^2).$

10. $(.2a^2-.8a+1.6)(.1a^2+.4a+.8).$

Expand:

11. $(y-3)(y+4).$
12. $(y+7)(y-8).$
13. $(y-1)(y+2).$
14. $(y-5)(y-9).$
15. $(y+8)(y-4).$
16. $(m-x)(m+x).$
17. $(m+a)(m-b).$
18. $(x-m)(x+n).$
19. $(x^2+x)(x+2).$
20. $(x^2+4)(x^2-3).$
21. $(x+m)(x+m).$
22. $(x^3+x^2)(x+1).$
23. $(x-1)(1+x).$
24. $(x+3y)(x-2y).$
25. $(a^n+b^m)(a^n-b^m).$
26. $(a^m+b^n)(a^n-b^m).$
27. $(a+b+c)(a+b-c).$
28. $(x+y+z)(x-y+z).$
29. $(r+s-t)(s-t-r).$
30. $(m+n-p)(m-n+p).$
31. $(a-b)(a+b)(a^2+b^2).$
32. $(1-x)(1+x)(1+x^2)(1+x^4).$
33. $(1-x)(1+x)(1-x)(1+x).$
34. $(m+n)(m+n)(m-n)(m-n).$

35. $(a^4 + a^3 + a^2 + a + 1)(a - 1)$.

36. $(x^3 + x^2y + xy^2 + y^3)(x - y)$.

37. $(x^5 - x^4 + x^3 - x^2 + x - 1)(x + 1)$.

38. $(a^5 + 2a^4 + 4a^3 + 8a^2 + 16a + 32)(a - 2)$.

Square:

39. $2x - 3y$.

40. $x^4 - ax^2$.

41. $50 - 1$.

42. $100 - 5$.

43. $n^x - m^y$.

44. $7x - b^2y$

45. $a + b + c + d$

46. $2a - 3b - 4c$.

47. $x^{n-1} - y - a^2$.

Expand:

48. $(5a - 4y)(5a - 3y)$.

49. $(6x - 4y)(3x + 5y)$.

50. $(3x + ay)(3x + by)$.

51. $(2a^2x - 5b^2y)(4a^2x - 3b^2y)$.

52. $(6amn + 5p)(6amn - 3p)$.

53. $(3a^{n+1} - 2b^{n-1})(2a^{n-1} - 3b^{n-1})$.

54. $(x + y)(x - y)(x^2 + y^2)(x^4 + y^4)(x^8 + y^8)$.

55. $(m^8 + 1)(m^4 + 1)(m^2 + 1)(m + 1)(m - 1)$.

56. $(16x^4 + 1)(4x^2 + 1)(2x + 1)(2x - 1)$.

Divide:

57. $x^5 - 2x^4 + 2x^3 + 12x^2 - x - 8$ by $x + 1$.

58. $x^4 - 4x^3 + 5x^2 - 4x + 1$ by $x^2 - 3x + 1$.

59. $x^8 - 45x^5 + 45x^4 - 18x^2 + 9x - 1$ by $x^3 - 4x^2 + 3x - 1$.

60. $a^7 - 12a^2 - a + 12$ by $a^3 - 2a^2 + 4a - 3$.

61. $b^8 - 10b^2 - 5b + 4$ by $b^3 - 2b^2 + 3b - 1$.

62. $m^{10} - 6m^3 + 5m - 2$ by $m^4 + 2m^3 - 3m - 2$.

63. $a^7 - 160a^4 + 127a^3 - 100a^2 - 20a + 16$ by $a^3 - 6a^2 + 5a - 4$.

64. $b^{10} + 29b^4 - 170b^3 - 61b^2 + 210b - 22$ by $b^4 + 2b^2 - 5b - 11$.

65. $6a^7 + 3\frac{9}{16}a^2y^5 - 3\frac{3}{32}ay^6 + 2\frac{1}{64}y^7$ by $a^3 + \frac{1}{2}a^2y - \frac{1}{4}ay^2 + \frac{1}{8}y^3$.

66. $a^2c - ab^2 + acd - ad^2 - abc + b^3 - bcd + bd^2 - ac^2 + cb^2 - c^2d + cd^2$ by $ac - b^2 + cd - d^2$.

67. Divide 1 by $1 - x$ to six terms.

Simplify:

68. $4a^2 + 3b^2 - (2a^2 - 3b^2) - (7b^2 - 2a^2) - (-a^2 - b^2)$.

69. $a^2 - (b^2 - c^2) - (b^2 + c^2 - a^2) + (c^2 - \overline{b^2 - a^2}) - (a^2 - b^2 - c^2)$.

70. $x^2 - (2xy - y^2) - (x^2 + xy - y^2) - x^2 - \overline{2xy - y^2} + 5y^2$.

71. $m + \{2m - [n + 3p - (4p - 3n) - 5n + 2m] - 7p\}$.

72. $x - 3y + \{2z - (5y - \overline{4x - 7z}) - (x - y) - z\} - x$.

73. $1 - \{1 - [x^2 - 3 - (2x^2 - 4) + 3x^2 + 1] - (x^2 - 4)\} - 1$.

74. $a - (2b + 5a) - 2b - [3a - (6b - 5a) - a] + 12a$.

75. $x - \{m - [x + (3m - 2x) + 5x - (2x + m)] - 2x + m\}$.

76. $x - \{5x - [6x - (7x - \overline{8x - 9x}) - 10x] + 11x\} + 9x$.

77. $3 - \{c - [5 - (2c - \overline{7 - 3c} - 11) + 5c] - 6c - 20\}$.

78. $x + \{3y + [4x - (2y - 7x) - 3y] - (10y + 4x) + 8y\}$.

79. $1 - \{-[-(1 - x) - 1] - 1\} - \{x - (5 - 3x) - 7 + x\}$.

Collect the coefficients of x, y, and z:

80. $ax + ay + az - bx - by - bz$.

81. $ax - 2y + cz + by - 12x + 4z$.

82. $3mx - nx + by - y + 3cz - 4z$.

83. $py - y - 4z + bz - x + mx - nx - z$.

84. $cx - by - 3az + x - y - 4z + z - y$.

85. $16ny - 16mx + ax + by + cx - 2y$.

86. $mx + ny + az + 2ax - 2my + 2nz$.

87. $x - y - az + 8mx + aby - x^2 + y^2 + z$.

88. $a^2x + b^2y - 2ax - 2cz + c^2z + x + y + z$.

89. $m^2x - n^2y + m^2y - n^2x - 2mnx - 2mny - n^2z + z$.

90. $4(ax - by + cz) - 2(bx - ay - cz) - 2(x - y + z)$.

FACTORING

117. The numbers that multiplied together produce a given number are called its **Factors.**

The factors of $12\,a$ are 2, 2, 3, and a; or 4, 3, and a; or 2, 6, and a; or 12 and a; or 2 and $6\,a$; or $4\,a$ and 3, etc.

118. A number that has no integral factors except itself and 1 is called a **Prime Number.**

119. A number that has integral factors besides itself and 1 is called a **Composite Number.**

120. A factor that is a prime number is called a **Prime Factor.**

121. The process of separating a number into its factors is called **Factoring.**

122. To factor a monomial.

The factors of the numerical coefficient are found as in arithmetic, but the factors of the literal part are evident.

Thus, in a^3, the three factors are as evident as if they were written $a \times a \times a$.

It is seldom necessary to resolve a monomial into its simplest factors, but the following problem often occurs:

Given one factor of a monomial, to find the other.

Rule. — *Divide the monomial by the given factor.*

1. In each of the following, if xy is one factor, find the other: $6\,x^5y$, $15\,x^4y^2$, $2\,x^3y^3$, $a^2x^2b^2y^2$, $-mnxy$, $-xy$.

2. In each of the following, if abc is one factor, find the other: a^2bc, ab^2c, abc^2, $-a^2b^2c^2$, $-a^2bc$, $-\frac{1}{3}\,abc$.

3. Find two equal positive factors of x^2; of $9\,a^2x^2$; of $64\,m^4$.

4. Find two equal negative factors of $25\,x^2$; of $16\,a^2$; of $9\,a^6$.

123. To factor a polynomial whose terms have a common factor.

EXAMPLES

1. What are the factors of $3\,a^2xy - 6\,ax^2y + 9\,axy^2$?

PROCESS

$3\,a^2xy - 6\,ax^2y + 9\,axy^2$
$= 3\,axy\,(a - 2\,x + 3\,y)$

EXPLANATION. — By examining the terms of the polynomial, it is seen that $3\,axy$ is a factor of every term. Dividing by this common factor, the other factor is found.

Hence, the factors are $3\,axy$, the monomial factor, and $(a - 2\,x + 3\,y)$, the polynomial factor, since, by the Distributive Law for multiplication,

$$3\,axy\,(a - 2\,x + 3\,y) = 3\,a^2xy - 6\,ax^2y + 9\,axy^2.$$

Find the factors of each of the following polynomials:

2. $5\,x^2 - 5\,x^2$.
3. $8\,x^2 + 2\,x^4$.
4. $3\,x^3 - 6\,x^2y$.
5. $4\,a^2 - 6\,ab$.
6. $5\,m^2 - 3\,mn$.
7. $3\,x^3y^2 - 3\,x^2y^3$.
8. $5\,m^4n - 10\,m^3n^2$.
9. $4\,a^3b - 6\,a^2b^2$.
10. $5\,x^4 - 10\,x^3 - 5\,x^2$.
11. $3\,a^4 - 2\,a^3b + a^2b^2$.
12. $x^{12} + x^{11} + x^{10} - x^9$
13. $3\,m^5 - 12\,m^3n^2 + 6\,mn^4$.
14. $ac - bc - cy - abc$.
15. $3\,x^3y^3 - 3\,x^2y^2 + 12\,xy$.
16. $16\,a^2b^3c^4 - 24\,a^3b^2c^3 + 32\,a^3b^4c^3$.
17. $60\,m^2n^3r^2 - 45\,m^3n^2r^3 + 90\,m^4n^3r^2$.
18. $12\,a^2by - 18\,ab^2y^2 + 24\,a^3b^2y^2$.
19. $14\,a^2mn^2 - 21\,a^3m^2n^3 - 49\,a^4mn^2$.
20. $12\,x^2y^2z^3 - 16\,x^2y^2z^2 - 20\,x^3y^3z^3$.
21. $25\,c^2dx^3 + 35\,c^3d^2x^4 - 55\,c^2d^2x^5$.
22. $51\,xy^2z^3 - 68\,x^3y^2z^2 + 85\,x^4y^3z^4$.
23. $52\,a^2b^3c^4 - 65\,a^3b^2c^2 - 91\,a^2b^2c^2$.
24. $44\,a^4x^3y^2 + 66\,a^3x^4y^3 + 88\,a^2x^5y^4$.
25. $84\,x^4y^2 - 36\,x^3y^3 + 60\,x^2y^4 - 48\,xy^5$.

124. To factor a polynomial whose terms may be grouped to show a common polynomial factor.

EXAMPLES

1. Factor $ax + ay + bx + by$.

SOLUTION

$$ax + ay + bx + by = a\,(x + y) + b\,(x + y)$$
$$= (a + b)(x + y).$$

2. Factor $ax - ay - bx + by$.

SOLUTION

$$ax - ay - bx + by$$
$$= a(x - y) - b(x - y)$$
$$= (a - b)(x - y).$$

Observe that, when the first two terms are factored, $(x - y)$ is found to be the binomial factor. Since $(x - y)$ is to be a factor of the other two terms, the monomial factor is $-b$, not $+b$.

3. Factor $cx + y - dy + cy - dx + x$.

SOLUTION

$$cx + y - dy + cy - dx + x$$
Arranging terms, $$= cx - dx + x + cy - dy + y$$
$$= (c - d + 1)x + (c - d + 1)y$$
$$= (c - d + 1)(x + y).$$

Factor the following:

4. $am - an + mx - nx$.

5. $bc - bd + cx - dx$.

6. $pq - px - rq + rx$.

7. $ay - by - ab + b^2$.

8. $x^2 - xy - 5x + 5y$.

9. $b^2 - bc + ab - ac$.

10. $x^2 + xy - ax - ay$.

11. $c^2 - 4c + ac - 4a$.

12. $2x - y + 4x^2 - 2xy$.

13. $1 - m + n - mn$.

14. $2p + q + 6p^2 + 3pq$.

15. $ar - rs - ab + bs$.

16. $x^3 + x^2 + x + 1$.

17. $y^3 + y^2 - 3y - 3$.

18. $x^5 + x^3 + x^2y + y$.

19. $2 - 2n - n^2 + n^3$.

20. $x^2 - x - a + ax$.

21. $3x^3 - 15x + 10y - 2x^2y$.

22. $12a^3 - 8ab - 3a^4 + 2a^2b$

23. $3m^2n - 9mn^2 + am - 3an$.

24. $15ab^2 - 9b^2c - 35ab + 21bc$.

25. $16ax + 12ay - 8bx - 6by$.

26. $ax^2 - ax - axy + ay + x - 1$.

27. $xy + x - 3y^2 - 3y - 4y - 4$.

28. $ax - a - bx + b - cx + c$.

29. $mx - nx - x - my + ny + y$.

30. $a^2 - a - ab + b - 2ac + 2c$.

31. $mp^2 - np^2 + mq - nq + m - n$.

32. $ax^2 - bx^2 - ax + bx + a - b$.

33. $2\,mx^2 - nx^2 + n + 2\,nx - 4\,mx - 2\,m$.

34. $bx^2 - b - xy - y + yx^2 - bx$.

35. $a^2x - a^2y - ay - y + x + ax$.

36. $2 - 3\,b + 3\,ab - 2\,a + 4\,a^2 - 6\,a^2b$.

37. $m^2 + mn + mn + n^2 + m + n$.

125. To factor a trinomial that is a perfect square.

1. Since $(a + b)(a + b) = a^2 + 2\,ab + b^2$, what are the factors of $a^2 + 2\,ab + b^2$? How are they obtained from $a^2 + 2\,ab + b^2$?

2. Since $(a - b)(a - b) = a^2 - 2\,ab + b^2$, what are the factors of $a^2 - 2\,ab + b^2$? How are they obtained from $a^2 - 2\,ab + b^2$?

3. What determines the sign that connects the terms of each factor?

126. One of the two equal factors of a number is called its **Square Root.**

127. In a trinomial that is a perfect square one term is equal to twice the product of the square roots of the other two terms.

$25\,x^2 - 20\,xy + 4\,y^2$ is a perfect square, for twice the product of the square root of $25\,x^2$ and the square root of $4\,y^2$ is $20\,xy$.

RULE. — *Connect the square roots of the terms that are squares with the sign of the other term, and indicate that the result is to be taken twice as a factor.*

From any expression that is to be factored, the *monomial* factors should usually first be removed.

Thus, $2\,a^3 - 4\,a^2 + 2\,a = 2\,a(a^2 - 2\,a + 1) = 2\,a\,(a - 1)^2$.

EXAMPLES

Factor the following:

1. $x^2 + 2\,xy + y^2$.
2. $p^2 - 2\,pq + q^2$.
3. $c^2 + 2\,cd + d^2$.
4. $m^2 - 2\,mn + n^2$.
5. $x^2 + 6\,x + 9$.
6. $m^2 - 8\,m + 16$.
7. $x^2 - 2\,x + 1$.
8. $a^2 - 16\,a + 64$.

9. x^2+4x+4.
10. $4-4a+a^2$.
11. $4a-4a^2+a^3$.
12. $3x^2+6xy+3y^2$.
13. $2m^2-4mn+2n^2$.
14. $5x^2+30x+45$.
15. $10x^2-20x+10$.
16. $16p^2-24p+9$.
17. $9x^2-42x+49$.
18. $1+4b+4b^2$.
19. $1-6a^3+9a^6$.
20. $9+42b^3+49b^6$.
21. $9m^8-6m^4+1$.
22. $4x^2y^2-20xy+25$.
23. $4x^2+12xyz+9y^2z^2$.
24. $9a^2m^2-6am+1$.
25. $2x+20a^2x+50a^4x$.
26. $18a^2b+60ab^2+50b^3$.
27. $a^2x^6-2ax^3by^3+b^2y^6$.
28. $25a^{2m}-60a^mb^n+36b^{2n}$.
29. $x^{2n}-2x^ny^nz^n+y^{2n}z^{2n}$.
30. $81a^2b^2c^2+18ab^2c^2d+b^2c^2d^2$.

When either or both of the squares are polynomials, the expression may be factored in a similar manner.

31. Factor $x^2+6x(x-y)+9(x-y)^2$.

SOLUTION

$$\begin{aligned}&x^2+6x(x-y)+9(x-y)^2\\&=[x+3(x-y)][x+3(x-y)]\\&=(x+3x-3y)(x+3x-3y)\\&=(4x-3y)(4x-3y).\end{aligned}$$

32. Factor $(a-b)^2+2(a-b)(b-c)+(b-c)^2$.

SOLUTION

$$\begin{aligned}&(a-b)^2+2(a-b)(b-c)+(b-c)^2\\&=[(a-b)+(b-c)][(a-b)+(b-c)]\\&=(a-b+b-c)(a-b+b-c)\\&=(a-c)(a-c).\end{aligned}$$

Factor:

33. $x^2+2x(x-y)+(x-y)^2$.
34. $a^2-4a(a-1)+4(a-1)^2$.
35. $c^2-6c(a-c)+9(a-c)^2$.
36. $m^2+2m(m-n)+(m-n)^2$.
37. $16-24(a-b)+9(a-b)^2$.
38. $x^2+25(y^3-x)^2+10x(y^3-x)$.
39. $14a(x-y)+(x-y)^2+49a^2$.
40. $10m(m-4)+25m^2+(m-4)^2$.

41. $(a+b)^2-2(a+b)(b+c)+(b+c)^2$.

42. $(a-2x)^2+4(a-2x)(2x-b)+4(2x-b)^2$.

43. $16(a-x)^2+32(a-x)(x+b)+16(x+b)^2$.

44. $(a+3b)^2-4(a+3b)(3b-2c)+4(3b-2c)^2$.

45. $(x^2+x+1)^2+2(x+1)(x^2+x+1)+(x+1)^2$.

46. $(a+b+c)^2+2(a+b-c)(a+b+c)+(a+b-c)^2$.

47. $(x^3-x^2)^2+2(x^3-x^2)(x+1)+(x^2+2x+1)$.

128. To factor the difference of two squares.

1. Since $(a+b)(a-b)=a^2-b^2$, what are the factors of a^2-b^2? How do these two factors differ?

2. Since $(a^2+b^2)(a^2-b^2)=a^4-b^4$, what are the factors of a^4-b^4? How do these two factors differ?

RULE. — *Find the square roots of the two terms, and make their sum one factor and their difference the other.*

Sometimes the factors of a number may themselves be factored.

EXAMPLES

1. Factor b^2-y^2.

SOLUTION. $b^2-y^2=(b+y)(b-y)$.

2. Factor x^2-1.

SOLUTION. $x^2-1=(x+1)(x-1)$.

3. Factor x^4-1.

SOLUTION. $x^4-1=(x^2+1)(x^2-1)$
$=(x^2+1)(x+1)(x-1)$.

Resolve into their simplest factors:

4. x^2-m^2.
5. a^2-y^2.
6. a^2-16.
7. y^2-x^2.
8. a^2-9.
9. $25-c^2$.
10. x^4-49.
11. x^4-81.
12. a^4-16.
13. a^4-b^4.
14. $a^{16}-b^8$.
15. $4x^2-25y^2$.
16. $9a^2-49b^2$.
17. $a^2x^2-4c^2$.
18. m^4-16n^4.

19. $25x^2 - 1$.

20. $81m^4 - 1$.

21. $36a^4 - 25$.

22. $121b^2 - c^2$.

23. $400a^2 - 81y^2$.

24. $100x^{2n} - 1$.

25. $400x^2 - 100y^2$.

26. $2a^8 - 2b^8$.

27. $4m^4 - 4b^4$.

28. $3x^4 - 3y^6$.

29. $5x^4 - 5y^{10}$.

30. $8x^{10} - 8y^8$.

31. $5x^8 - 5$.

32. $3a^5 - 3a$.

33. $x^3 - xy^2$.

34. $5a^5y - 5ay$.

35. $x^{2n} - y^{2b}$.

36. $x^{2n+1} - xy^{2n}$.

When either or both of the squares are polynomials, the expression may be factored in a similar manner.

37. Factor $25a^2 - (3a + 2b)^2$.

SOLUTION

One factor is $5a + (3a + 2b)$, and the other is $5a - (3a + 2b)$.

$$5a + (3a + 2b) = 5a + 3a + 2b = 8a + 2b = 2(4a + b).$$

$$5a - (3a + 2b) = 5a - 3a - 2b = 2a - 2b = 2(a - b).$$

$$\therefore 25a^2 - (3a + 2b)^2 = (5a + 3a + 2b)(5a - 3a - 2b)$$

$$= (8a + 2b)(2a - 2b)$$

$$= 2(4a + b) \cdot 2(a - b)$$

$$= 4(4a + b)(a - b).$$

Factor:

38. $a^2 - (a + b)^2$.

39. $b^2 - (2a + b)^2$.

40. $a^2 - (b + c)^2$.

41. $4c^2 - (b + c)^2$.

42. $9b^2 - (a - x)^2$.

43. $9a^2 - (2a - 5)^2$.

44. $x^4 - (3x^2 - 2y)^2$.

45. $49a^2 - (5a - 4b)^2$.

46. Factor $(3a - 2b)^2 - (2a - 5b)^2$.

SOLUTION

$$(3a - 2b)^2 - (2a - 5b)^2$$

$$= [(3a - 2b) + (2a - 5b)][(3a - 2b) - (2a - 5b)]$$

$$= (3a - 2b + 2a - 5b)(3a - 2b - 2a + 5b)$$

$$= (5a - 7b)(a + 3b).$$

Factor:

47. $(2a + 3b)^2 - (a + b)^2$.

48. $(5a - 3b)^2 - (a - b)^2$.

49. $(2x + 5)^2 - (5 - 3x)^2$.

50. $(a - 2b)^2 - (a - 5)^2$.

51. $(2x-3y)^2-(3y+z)^2$.

52. $(5b-4c)^2-(3a-2c)^2$.

53. $(4x-3y)^2-(2x-3a)^2$.

54. $(9x+6y)^2-(4x-3y)^2$.

55. $(x^3+x^2)^2-(2x+2)^2$.

56. $(a+b+c)^2-(a-b-c)^2$.

57. Factor a^2+4-c^2-4a.

SOLUTION

$$a^2+4-c^2-4a$$

Arranging terms, $$=a^2-4a+4-c^2$$

$$=(a-2)^2-c^2$$

$$=(a-2+c)(a-2-c).$$

58. Factor $a^2+b^2-c^2-4-2ab+4c$.

SOLUTION

$$a^2+b^2-c^2-4-2ab+4c$$

Arranging terms, $$=a^2-2ab+b^2-c^2+4c-4$$

$$=(a^2-2ab+b^2)-(c^2-4c+4)$$

$$=(a-b)^2-(c-2)^2$$

$$=(a-b+c-2)(a-b-c+2).$$

Factor:

59. $a^2-2ax+x^2-n^2$.

60. $b^2+2by+y^2-n^2$.

61. $1-4q+4q^2-a^2$.

62. $r^2-2rx+x^2-16t^2$.

63. $9a^2b-6ab^2+b^3-4bc^2$.

64. $4a^2c+12abc+9b^2c-4c^3$.

65. $3x^2y-12xy^2+12y^3-3x^6y$.

66. $4an^4-16a^2n^2+16a^3-4an^6$.

67. $c^2-a^2-b^2-2ab$.

68. $b^2-x^2-y^2+2xy$.

69. $4c^2-x^2-y^2-2xy$.

70. $9c^2-x^2-y^2+2xy$.

71. $x^3-a^2x-4b^2x-4abx$.

72. $bc^2-9a^2b-b^3-6ab^2$.

73. $ab^2-4a^3-12a^2c-9ac^2$.

74. $27c^2-12a^2+36ab-27b^2$.

75. $a^2-2ab+b^2-c^2+2cd-d^2$.

76. $x^2-2xy+y^2-m^2+10m-25$.

77. $4x^2+9-12x+10mn-m^2-25n^2$.

78. $x^2-a^2+y^2-b^2+2xy-2ab$.

129. To factor a quadratic trinomial.

$$(x+3)(x+5) = x^2 + 8x + 15.$$
$$(x-3)(x-5) = x^2 - 8x + 15.$$
$$(x+1)(x+15) = x^2 + 16x + 15.$$
$$(x-1)(x+15) = x^2 + 14x - 15.$$
$$(x-3)(x+5) = x^2 + 2x - 15.$$
$$(x+3)(x-5) = x^2 - 2x - 15.$$

1. How may the first term of each factor be found from the product?

2. When the last term of the product has the sign +, how do the signs of the last terms of the factors compare? How, when the last term of the product has the sign −?

3. How does the coefficient of the middle term of the product compare with the *algebraic* sum of the last terms of the factors?

130. A trinomial of the form $x^2 + bx + c$, in which x^2 is the square of any number, c the product of two numbers, and b their algebraic sum, b and c being either positive or negative, is called a **Quadratic Trinomial.**

RULE. — *Arrange the trinomial according to the descending powers of one of the letters.*

For the first term of each factor take the square root of the first term of the trinomial; and for the second terms, such numbers that their product is the third term of the trinomial, and their algebraic sum multiplied by the first term of the factor will be equal to the second term.

EXAMPLES

1. Resolve $x^2 - 13x - 48$ into two binomial factors.

SOLUTION. — The first term of each factor is evidently x.

Since the product of the second terms of the two binomial factors is -48, the second terms must have opposite signs; and since their algebraic sum, -13, is negative, the negative term must be numerically larger than the positive term.

The two factors of -48 whose sum is negative may be 1 and -48, 2 and -24, 3 and -16, 4 and -12, or 6 and -8. Since the algebraic sum of 3 and -16 is -13, 3 and -16 are the factors of -48 sought.

$$\therefore x^2 - 13x - 48 = (x+3)(x-16).$$

2. Factor $m^2 + m - 72$.

SOLUTION. — Since $+9$ and -8 are the only two factors of -72 whose algebraic sum is $+1$, the coefficient of the middle term, the required factors are $(m+9)$ and $(m-8)$.

$$\therefore\ m^2 + m - 72 = (m+9)(m-8).$$

Separate the following into their simplest factors:

3. $x^2 + 7x + 12$.
4. $y^2 - 7y + 12$.
5. $p^2 - 8p + 12$.
6. $r^2 + 8r + 12$.
7. $m^2 + 5m - 14$.
8. $a^2 - 2a - 15$.
9. $b^2 + b - 12$.
10. $r^2 + r - 30$.
11. $c^2 - c - 72$.
12. $c^2 - 5c - 14$.
13. $x^2 - x - 110$.
14. $a^2 + 9a - 52$.
15. $a^2 + 8a - 128$.
16. $x^2 - 25x + 100$.
17. $x^2 + 12x - 85$.
18. $x^2 + 5ax + 6a^2$.
19. $x^2 - 6ax + 5a^2$.
20. $y^2 - 4by - 12b^2$.
21. $y^2 - 3ny - 28n^2$.
22. $z^2 - anz - 2a^2n^2$.
23. $x^4 + 19cx^2 + 90c^2$.
24. $x^6 + 12ax^3 + 20a^2$.
25. $x^{10} - 11b^2x^5 + 24b^4$.
26. $5nx^2 - 55nx + 150n$.
27. $3a^2bx^2 - 3a^2bx - 6a^2b$.
28. $12m^2x^2 - 60m^2bx + 72m^2b^2$.
29. $4ax + 2ax^2 - 48a$.
30. $11a^2x - 55ax + 66x$.
31. $20bx + 10b^2 - 630x^2$.
32. $x^2 + (b-a)x - ab$.

131. To factor trinomials of the form $ax^2 + bx + c$.

EXAMPLES

1. Separate $3x^2 + 11x + 6$ into two binomial factors.

SOLUTION. — Since $3x^2$ is the product of the first terms of the factors, and 6 is the product of their last terms, and since the only factors, each containing x, that $3x^2$ can have are $3x$ and x, one factor is $3x$ plus a factor of 6, and the other is x plus the other factor of 6. *By trial*, it is found that 2 and 3 are the factors of 6, and that if 2 is added to $3x$ and 3 to x, the middle term of the product $(3x+2)(x+3)$ will be $11x$.

$$\therefore\ 3x^2 + 11x + 6 = (3x+2)(x+3).$$

2. Factor $9x^2 + 30x + 16$.

SOLUTION

$$9x^2 + 30x + 16$$
$$= (3x)^2 + 10(3x) + 16$$

Put m for $3x$, $= m^2 + 10m + 16$

§ 130, $= (m + 2)(m + 8)$

Put $3x$ for m, $= (3x + 2)(3x + 8)$.

SUGGESTION. — *When the coefficient of x^2 is a square, and when the square root of the coefficient of x^2 is exactly contained in the coefficient of x*, the trinomial may be factored by the method illustrated above.

3. Factor $4x^2 - 5x - 6$.

SOLUTION

$$4x^2 - 5x - 6 = (4x^2 - 5x - 6) \times \frac{4}{4} = \frac{16x^2 - 20x - 24}{4}$$
$$= \frac{(4x)^2 - 5(4x) - 24}{4} = \frac{(4x - 8)(4x + 3)}{4}$$
$$= \frac{4(x - 2)(4x + 3)}{4} = (x - 2)(4x + 3).$$

EXPLANATION. — Although the first term is a square, *its square root is not exactly contained in the second term.*

But if such a trinomial is multiplied by the coefficient of x^2, the resulting trinomial will be one whose second term exactly contains the square root of its first term.

Multiplying the given trinomial by 4, factoring as in example 2, and dividing the result by 4, the factors of the given trinomial are $(x-2)$ and $(4x+3)$.

4. Factor $24x^2 + 14x - 5$.

SOLUTION

$$24x^2 + 14x - 5 = (24x^2 + 14x - 5) \times \frac{6}{6} = \frac{144x^2 + 84x - 30}{6}$$
$$= \frac{(12x)^2 + 7(12x) - 30}{6} = \frac{(12x + 10)(12x - 3)}{6}$$
$$= \frac{2(6x + 5) \cdot 3(4x - 1)}{2 \times 3} = (6x + 5)(4x - 1).$$

SUGGESTION. — *When the first term is not a square*, it may always be made a square whose square root will be exactly contained in the second term by *multiplying* the trinomial *by the coefficient of x^2.*

After factoring, the result should be divided by the coefficient of x^2.

Frequently the multiplier can be taken smaller than the coefficient of x^2, as in the above example.

Separate into their simplest factors:

5. $2x^2 + x - 15$.
6. $9x^2 - 42x + 40$.
7. $5x^2 + 13x + 6$.
8. $3x^2 - 17x + 10$.
9. $25x^2 + 15x + 2$.
10. $16x^2 + 20x - 66$.
11. $36x^2 - 48x - 20$.
12. $9x^2 + 43x - 10$.
13. $25x^2 + 25x - 24$.
14. $49x^2 - 42x - 55$.
15. $16x^2 + 50x - 21$.
16. $4x^2 - 4x - 35$.
17. $9x^4 - 10x^2 - 16$.
18. $27b^4 - 3b^2 - 14$.
19. $10x^6 - 2x^3 - 44$.
20. $2x^2 + 5xy + 2y^2$.
21. $2x^2 + 3xy - 2y^2$.
22. $3x^2 - 10xy + 3y^2$.
23. $6x^2 - 11x - 35$.
24. $6x^2 - 13x + 6$.
25. $15x^2 - 14x - 8$.
26. $15x^2 + 17x - 4$.
27. $21a^2 - a - 10$.
28. $18x^2 - 3x - 36$.

132. To factor the sum of the same odd powers of two numbers

EXAMPLES

1. Factor $a^7 + b^7$.

SOLUTION

§§ 111–113, $a^7 + b^7 = (a + b)(a^6 - a^5b + a^4b^2 - a^3b^3 + a^2b^4 - ab^5 + b^6)$.

2. Factor $m^5 + 32x^5$.

SOLUTION

$$m^5 + 32x^5 = m^5 + (2x)^5$$

§§ 111–113, $$= (m + 2x)(m^4 - 2m^3x + 4m^2x^2 - 8mx^3 + 16x^4)$$

3. Factor $x^6 + y^6$.

SOLUTION

$$x^6 + y^6 = (x^2)^3 + (y^2)^3$$

§§ 111–113, $$= (x^2 + y^2)(x^4 - x^2y^2 + y^4).$$

Factor the following:

4. $m^3 + n^3$.
5. $a^3 + x^3$.
6. $a^5 + b^5$.
7. $x^5 + 1$.
8. $r^7 + s^7$.
9. $x^9 + y^9$.
10. $a^5 + 32$.
11. $p^3 + 27$.
12. $x^{14} + 128$.

133. To factor the difference of the same odd powers of two numbers.

EXAMPLES

1. Factor $a^7 - b^7$.

SOLUTION

§§ 111–113, $a^7 - b^7 = (a - b)(a^6 + a^5b + a^4b^2 + a^3b^3 + a^2b^4 + ab^5 + b^6)$.

2. Factor $m^5 - 32\,x^5$.

SOLUTION

§§ 111–113, $m^5 - 32\,x^5 = m^5 - (2\,x)^5$

$= (m - 2\,x)(m^4 + 2\,m^3x + 4\,m^2x^2 + 8\,mx^3 + 16\,x^4)$.

3. Factor $a^{10} - b^5$.

SOLUTION

§§ 111–113, $a^{10} - b^5 = (a^2)^5 - b^5 = (a^2 - b)(a^8 + a^6b + a^4b^2 + a^2b^3 + b^4)$.

Factor the following:

4. $a^5 - b^5$.
5. $x^3 - b^3$.
6. $y^3 - a^3$.
7. $y^3 - 8$.
8. $a^5 - 32$.
9. $a^7 - 1$.
10. $x^5 - y^{10}$.
11. $x^6 - y^3$.
12. $x^5 - 243$.

134. To factor the difference of the same even powers of two numbers.

EXAMPLES

1. Factor $a^6 - b^6$.

FIRST SOLUTION

§§ 111–113, $a^6 - b^6 = (a - b)(a^5 + a^4b + a^3b^2 + a^2b^3 + ab^4 + b^5)$

$= (a - b)(a^5 + a^2b^3 + a^4b + ab^4 + a^3b^2 + b^5)$

$= (a - b)[a^2(a^3 + b^3) + ab(a^3 + b^3) + b^2(a^3 + b^3)]$

$= (a - b)(a^2 + ab + b^2)(a^3 + b^3)$

§ 132, $= (a - b)(a^2 + ab + b^2)(a + b)(a^2 - ab + b^2)$.

SECOND SOLUTION

§ 128, $a^6 - b^6 = (a^3)^2 - (b^3)^2 = (a^3 + b^3)(a^3 - b^3)$

§§ 132, 133, $= (a + b)(a^2 - ab + b^2)(a - b)(a^2 + ab + b^2)$.

In each of the above solutions $a^6 - b^6$ is first separated into two factors. Thus, $a^6 - b^6$ is divisible by $a - b$; also by $a^3 - b^3$, since $a^6 - b^6 = (a^3)^2 - (b^3)^2$.

When the even powers are regarded as squares, as in the second solution, the process may be regarded as *factoring the difference of two squares.*

Separate the following into their simplest factors:

2. $x^6 - y^6$.
3. $x^6 - 1$.
4. $a^8 - b^8$.
5. $x^4 - 16$.
6. $x^4 - 81$.
7. $a^4 - 625$.
8. $1 - b^6$.
9. $64 - y^6$.
10. $1 - x^8$.

Factor the following by previous principles:

11. $p^2 - q^2$.
12. $p^3 + q^3$.
13. $p^3 - q^3$.
14. $r^4 - s^4$.
15. $r^5 - s^5$.
16. $r^5 + s^5$.
17. $r^6 - s^6$.
18. $r^6 + s^6$.
19. $m^7 - n^7$.
20. $m^7 + n^7$.
21. $m^8 - n^8$.
22. $a^8 - 1$.
23. $1 + x^6$.
24. $x + x^6$.
25. $32n - n^6$.
26. $m^3 - x^6$.
27. $b^4 - a^2b^4$.
28. $125 + a^3$.

135. To factor by the Factor Theorem.

1. If $5x = 0$, what must be the value of x?

2. If $5(x - 3) = 0$, which factor reduces the first member to zero; that is, what *value of* x reduces it to zero?

3. Since the expression $5(x - 3)$ reduces to zero when $x - 3$ reduces to zero, and $x - 3$ is reduced to zero by substituting 3 for x, what value substituted for x will reduce to zero *every* expression of which $x - 3$ is a factor?

4. How, then, may it be discovered whether $x - 3$ is a factor of a given expression containing x?

5. What value of x will reduce the expression $x^3 - 8$ to zero? What factor, then, has $x^3 - 8$?

6. What value of x will reduce the expression $x^3 - 8x + 7$ to zero? What factor, then, has $x^3 - 8x + 7$?

7. When does a rational integral expression containing x have the factor $x-1$? $x-2$? $x-3$? $x-a$?

136. Factor Theorem. — *If a rational integral expression containing x reduces to zero when a is substituted for x, it is exactly divisible by $x-a$.*

Demonstration. — Let D represent any rational integral expression containing x, and let D reduce to zero when a is substituted for x.

It is to be proved that D is exactly divisible by $x-a$.

Suppose that the dividend D is divided by $x-a$ until the remainder does not contain x. Denote the remainder by R and the quotient by Q.

Then, $$D = Q(x-a)+R. \qquad (1)$$

But, since, by supposition, D reduces to zero when $x=a$; that is, when $x-a=0$, equation (1) becomes

$$0 = 0 + R;$$

whence, $$R = 0.$$

That is, the remainder is zero, and the division is exact.

Note. a is the known number substituted for x, and it may be either positive or negative.

Examples

1. Factor $x^3 - 8x^2 + 17x - 10$ by the factor theorem.

Solution

$$\begin{aligned} &x^3 - 8x^2 + 17x - 10 \\ &= (x-1)(x^2 - 7x + 10) \\ &= (x-1)(x-2)(x-5). \end{aligned}$$

Since, when 1 is substituted for x, $x^3 - 8x^2 + 17x - 10$ reduces to 0, $x-1$ is a factor of the expression. Dividing by $x-1$, the other factor is $x^2 - 7x + 10$, whose factors, § 130, are $(x-2)$ and $(x-5)$.

2. Factor $x^4 + x^3 - 16x^2 - 4x + 48$ by the factor theorem.

Solution

$$\begin{aligned} &x^4 + x^3 - 16x^2 - 4x + 48 \\ &= (x-2)(x^3 + 3x^2 - 10x - 24) \\ &= (x-2)(x+2)(x^2 + x - 12) \\ &= (x-2)(x+2)(x-3)(x+4). \end{aligned}$$

Since, when 2 is substituted for x, the expression reduces to 0, $x-2$ is a factor of the expression. Dividing by $x-2$, the other factor is $x^3 + 3x^2 - 10x - 24$. Since, when -2 is substituted for x, $x^3 + 3x^2 - 10x - 24$ reduces to 0, $x+2$ is a factor of $x^3 + 3x^2 - 10x - 24$.

Dividing by $x + 2$, the other factor is $x^2 + x - 12$, a quadratic trinomial whose factors, § 130, are $(x - 3)$ and $(x + 4)$. Hence, the factors of the given expression are $(x - 2)$, $(x + 2)$, $(x - 3)$, and $(x + 4)$.

Factor the following polynomials by the factor theorem:

3. $x^2 - 31x + 30$.
4. $4x^2 - 7x + 3$.
5. $26x^2 - 10x - 16$.
6. $48x^2 - 31x - 17$.
7. $36x^2 - 61x + 25$.
8. $x^3 - 9x^2 + 23x - 15$.
9. $x^3 - 13x^2 + 47x - 35$.
10. $x^3 - 14x^2 + 35x - 22$.
11. $x^3 - 4x^2 - 7x + 10$.
12. $x^3 - 6x^2 - 9x + 14$.
13. $x^3 - 12x^2 + 41x - 30$.
14. $x^3 - 11x^2 + 31x - 21$.
15. $x^3 - 10x^2 + 29x - 20$.
16. $x^3 - 16x^2 + 71x - 56$.
17. $x^3 - 57x + 56$.
18. $x^3 - 21x + 20$.
19. $x^3 - 31x - 30$.
20. $x^3 - 13x + 12$.
21. $x^3 - 7x + 6$.
22. $x^3 - 19x + 30$.
23. $x^3 - 67x - 126$.
24. $x^3 - 39x - 70$.
25. $a^3 + 4a^2 - 11a - 30$.
26. $a^3 + 9a^2 + 26a + 24$.
27. $m^3 - 6m^2 - m + 30$.
28. $b^3 - 5b^2 - 29b + 105$.
29. $a^3 + 10a^2 - 17a - 66$.
30. $m^3 + 7m^2 + 2m - 40$.
31. $b^3 + 16b^2 + 73b + 90$.
32. $n^3 + 12n^2 + 41n + 42$.
33. $x^4 - 15x^2 + 10x + 24$.
34. $x^4 - 25x^2 + 60x - 36$.
35. $x^4 + 13x^2 - 54x + 40$.
36. $x^4 + 22x^2 + 27x - 50$.
37. $x^4 - 9x^2y^2 - 4xy^3 + 12y^4$.
38. $x^4 - 9x^2y^2 + 12xy^3 - 4y^4$.
39. $x^4 - x^3 - 7x^2 + x + 6$.
40. $x^4 - 9x^3 + 21x^2 + x - 30$.
41. $x^4 + 8x^3 + 14x^2 - 8x - 15$.
42. $x^5 - 4x^4 + 19x^2 - 28x + 12$.
43. $x^5 - 18x^3 + 30x^2 - 19x + 30$.
44. $x^5 - 10x^4 + 40x^3 - 80x^2 + 80x - 32$.

SPECIAL APPLICATIONS AND DEVICES

Examples

137. 1. Factor

$$a^2 + b^2 + c^2 + d^2 + 2ab - 2ac + 2ad - 2bc + 2bd - 2cd.$$

Solution. — Since the polynomial consists of the squares of four numbers together with twice the product of each of them by each succeeding number, the polynomial is the square of the sum of four numbers, § 95, and may be separated into two equal factors containing a, b, c, and d with proper signs.

Since $-2ac$, $-2bc$, and $-2cd$, the products that contain c, are negative, while $2ab$, $2ad$, and $2bd$, the products that do not contain c, are positive, it is evident that the sign of c is the opposite of that of a, b, and d.

Therefore, the factors are either

$$(a + b - c + d)(a + b - c + d),$$

or

$$(-a - b + c - d)(-a - b + c - d).$$

Factor the following:

2. $9x^2 + 4y^2 + 25z^2 - 12xy + 30xz - 20yz.$

3. $25m^2 + 36n^2 + p^2 - 60mn - 10mp + 12np.$

4. $a^2 + 16x^4 + 36y^2 - 8ax^2 + 12ay - 48x^2y.$

5. $x^2 + 4a^2 + b^2 + y^2 + 4ax - 2bx + 2xy - 4ab + 4ay - 2by.$

6. $m^2 + 4n^2 + a^2 + 9 - 4mn - 2am + 6m + 4an - 12n - 6a.$

138. The principle by which the difference of two squares is factored has many special applications.

1. Factor $a^4 + a^2b^2 + b^4$.

Solution. — Since $a^4 + a^2b^2 + b^4$ lacks $+ a^2b^2$ of being a perfect square, and since the value of the polynomial will not be changed by adding a^2b^2 and also subtracting a^2b^2, the polynomial may be written

$$a^4 + 2a^2b^2 + b^4 - a^2b^2,$$

which is the difference of two squares.

$$\begin{aligned} a^4 + a^2b^2 + b^4 &= a^4 + 2a^2b^2 + b^4 - a^2b^2 \\ &= (a^2 + b^2)^2 - (ab)^2 \\ &= (a^2 + ab + b^2)(a^2 - ab + b^2). \end{aligned}$$

2. Factor $4a^4 - 13a^2 + 9$.

Solution. $$\begin{aligned} 4a^4 - 13a^2 + 9 &= 4a^4 - 12a^2 + 9 - a^2 \\ &= (2a^2 - 3)^2 - a^2 \\ &= (2a^2 + a - 3)(2a^2 - a - 3). \end{aligned}$$

3. Factor $a^4 + 4$.

SOLUTION.
$$\begin{aligned} a^4 + 4 &= a^4 + 4a^2 + 4 - 4a^2 \\ &= (a^2 + 2)^2 - (2a)^2 \\ &= (a^2 + 2a + 2)(a^2 - 2a + 2). \end{aligned}$$

Factor the following:

4. $x^4 + x^2y^2 + y^4$.
5. $a^8 + a^4b^4 + b^8$.
6. $p^4 + p^2q^2 + q^4$.
7. $9x^4 + 20x^2y^2 + 16y^4$.
8. $4a^4 + 11a^2b^2 + 9b^4$.
9. $16a^4 - 17a^2x^2 + x^4$.
10. $25x^4 - 29x^2y^2 + 4y^4$.
11. $x^4 + x^2 + 1$.
12. $n^8 + n^4 + 1$.
13. $16x^4 + 4x^2y^2 + y^4$.
14. $a^4b^4 - 21a^2b^2 + 36$.
15. $c^4 + c^2d^2x^2 + d^4x^4$.
16. $25a^4 - 14a^2b^4 + b^8$.
17. $9a^4 + 26a^2b^2 + 25b^4$.
18. $b^4 + 64$.
19. $a^4 + 4b^4$.
20. $m^8 + 4$.
21. $a^4 + 324$.
22. $a^8 - 16$.
23. $m^5 + 4mn^4$.
24. $x^4 + 64y^4$.
25. $4a^4 + 81$.
26. $x^5y^2 + 4xy^2$.

139. Many polynomials may be written as quadratic trinomials in which x^2 and x are replaced by polynomials.

1. Factor $9x^2 + 4y^2 + 12z^2 + 21xz + 14yz + 12xy$.

SOLUTION.
$$\begin{aligned} &9x^2 + 4y^2 + 12z^2 + 21xz + 14yz + 12xy \\ &= (9x^2 + 12xy + 4y^2) + (21xz + 14yz) + 12z^2 \\ &= (3x + 2y)^2 + 7z(3x + 2y) + 4z \cdot 3z \\ &= (3x + 2y + 4z)(3x + 2y + 3z). \end{aligned}$$

§ 130,

Factor the following:

2. $a^2 + 2ab + b^2 + 8ac + 8bc + 15c^2$.
3. $x^2 - 6xy + 9y^2 + 6xz - 18yz + 5z^2$.
4. $m^2 + n^2 - 2mn + 7mp - 7np - 30p^2$.
5. $16n^2 + 55 - 64n - 16m + m^2 + 8mn$.
6. $9m^4 + k^2 - 30 + 39m^2 + 13k + 6m^2k$.
7. $25a^2 + y^2 + 10x^2 + 10ay - 35ax - 7xy$.
8. $4x^2 + y^2 - 6z^2 - 4xy + 2xz - yz$.
9. $a^2 + b^2 + c^2 + 2ab + 2ac + 2bc + 5a + 5b + 5c + 6$.

REVIEW OF FACTORING

140. Factor the following:

1. $m^2 - n^2$.
2. $x^2 - 1$.
3. $y^4 - 1$.
4. $1 - x^8$.
5. $x^{10} - 1$.
6. $x^6 - 1$.
7. $1 - a^3$.
8. $1 - b^4$.
9. $a - a^7$.
10. $b^7 + b$.
11. $p^4 + 4$.
12. $1 + x^{12}$.
13. $y - a^4y$.
14. $x^2y - y^3$.
15. $a^{13} - ab^{12}$.
16. $a^4 - 256$.
17. $3a^3 - 3a$.
18. $64 - 2y^5$.
19. $7n^7 - 7n$.
20. $a^7 - 9a$.
21. $4x^4 - 4x$.
22. $7y^4 - 175$.
23. $8 - 27a^3x^3$.
24. $32x - 2x^3$.
25. $6b^4 + 24$.
26. $a^5 + 27a^2$.
27. $b^2 - 196$.
28. $450 - 2a^2$.
29. $4m^3 + .004$.
30. $125 - 8x^6$.
31. $x^2 - 25x + 100$.
32. $x^2 - xy - 132y^2$.
33. $ax^2 - 3ax - 4a$.
34. $x^3 + 5x^2 - 6x$.
35. $3x^2 + 30x + 27$.
36. $128a^2 - 250a^5$.
37. $5x^{10} + 10x^5 - 15$.
38. $6x^2 - 19x + 15$.
39. $x^{2n} + 2x^ny^p + y^{2p}$.
40. $7x^2 - 77xy - 84y^2$.
41. $y^2 - 25yx + 136x^2$.
42. $9x^2 - 24xy + 16y^2$.
43. $289x^2 - 34xy + y^2$.
44. $3bx^2 + bxy - 10by^2$.
45. $y^2 - xy - 42x^2$.
46. $x^2 - ax - 72a^2$.
47. $n^2 - an - 90a^2$.
48. $a^2b^2 + ab - 56$.
49. $10a^2c + 33ac - 7c$.
50. $60ny^2 - 61ny - 56n$.
51. $25x^2 + 60xy + 36y^2$.
52. $6ax^2 + 5axy - 6ay^2$.
53. $169x^4 - 26ax^3 + a^2x^2$.
54. $a^4c^4 + a^2b^2c^2 + b^4$.
55. $16x^4 + 4x^2y^2 + y^4$.
56. $b^4c - 13b^2c + 42c$.
57. $2a^2 - 6ab - 140b^2$.
58. $m^2n - 21mn^2 + 80n^3$.

59. $17x^2 + 25x - 18$.

60. $5x^2 - 26xy + 5y^2$.

61. $y^2 + 16ay - 36a^2$.

62. $8a^2 - 21ab - 9b^2$.

63. $60a^2 + 8ax - 3x^2$.

64. $30x^2 - 37x - 77$.

65. $2x^3 + 28x^2 + 66x$.

66. $a^2 + b^2 - c^2 - 2ab$.

67. $ax^2 + 10ax - 39a$.

68. $n^4 + n^2a^2b^4 + a^4b^8$.

69. $a^2z^4 + a^2z^2 + a^2$.

70. $a^2 - 16a - 17$.

71. $a^2x^2 - 4ax + 3$.

72. $b^8 + b^4y^2 + y^4$.

73. $x^7 - 2x^6 + x$.

74. $x^3 + x^2y - 41xy^2 - 105y^3$.

75. $x^2 - cx + 2dx - 2cd$.

76. $x^3y + 4x^2y - 31xy - 70y$.

77. $x^2 - 3ax + 4bx - 12ab$.

78. $ax^3 - 9ax^2 + 26ax - 24a$.

79. $12ax - 8bx - 9ay + 6by$.

80. $25x^2 - 9y^2 - 24yz - 16z^2$.

81. $x^2 - z^2 + y^2 - a^2 - 2xy + 2az$.

82. $2b^2m - 3ab^2 + 2bmx - 3abx$.

83. $a^2 + b^2 + c^2 - 2ab - 2ac + 2bc$.

84. $x^3y + 14x^2y + 43xy + 30y$.

85. $x^3y - 15x^2y + 38xy - 24y$.

86. $abx^3 + 3abx^2 - abx - 3ab$.

87. $3bmx + 2bm - 3anx - 2an$.

88. $20ax^3 - 28ax^2 + 5a^2x - 7a^2$.

89. $x^2 + 9y^2 + 25z^2 - 6xy - 10xz + 30yz$.

90. $9x^2 + y^2 + 16z^2 - 6xy - 8yz + 24zx$.

91. $x^2y^2z^2 + a^2b^2 + 1 + 2abxyz + 2xyz + 2ab$.

92. $a^2b^2 + b^2c^2 + c^2d^2 - 2ab^2c + 2abcd - 2bc^2d$.

93. $x^8 + n^4x^4 + n^8 + 2n^2x^6 + 2n^4x^4 + 2n^6x^2$.

94. $a^2b^2x^2 - a^2b^2 - b^2x^2 + b^2 - a^2x^2 + a^2 + x^2 - 1$.

95. $(a + b)^6 - 1$.

96. $a^3 - 2a^2 + 1$.

97. $b^3 - 4b^2 + 8$.

98. $x^3 - 10x^2 + 125$.

99. $8x^4 - 6x^2 - 35$.

100. $3x^6 + 96x$.

101. $(a - 2)^3 + (a - 1)^3$.

102. $12x^3 + 3x^2 - 8x - 2$.

103. $2x^2 + 10x + ax + 5a$.

104. $x^3 + 5x^2 - 29x - 105$.

105. $m^2n^2 + a^2b^2 + b^2n^2 + 2bmn^2 + 2ab^2n + 2abmn$.

106. $a^5 + a^4b + a^3b^2 + a^2b^3 + ab^4 + b^5$.

107. $a^2b^2 - 4abx - 4x + 2ab + 4x^2$.

108. $(a+b)^2(x-y) - (a+b)(x^2-y^2)$.

109. $1 - x^2 + abx^2 + bx^3 - bx - ab$.

110. $x^2 - x^3 + x^2y - xy + x^2y - xy^2$.

111. $x^{2n-2} + b^2y^2 + 2x^{n-1}by$.

112. $x^3 + 15x^2 + 75x + 125$.

113. $4(ab+cd)^2 - (a^2+b^2-c^2-d^2)^2$.

114. $x^{3n} - a^{3b}$.

115. $(a^2+b^2-c^2)^2 - 4a^2b^2$.

116. $a^4b^2 + a^2b - 12$.

117. $x^3 - xy - x^2y + y^2$.

118. $x^4 - 4x^2y^2 + 2x^3 - 16y^3$.

119. $a^4 - b^4 - (a+b)(a-b)$.

120. $x^3 - 6x^2 + 12x - 8$.

121. $1000x^3 - 27y^3$.

122. $(a+x)^4 - x^4$.

123. $1 + (x+1)^3$.

124. $ab - bx^n + x^ny^m - ay^m$.

125. $x^9 + 4x$.

126. $x^5 - x^2 - x^4 + x^3$.

127. $(a+b)^4 - (b-c)^4$.

128. $3ab(a+b) + a^3 + b^3$.

129. $(x+y)^3 + (x-y)^3$.

130. $a^3 - (a+b)^3$.

131. $x^4 - 119x^2y^2 + y^4$.

132. $m^3 + m^2 - mn - mn^2$.

133. $(x^2-y^2)^2 - (x^2-xy)^2$.

134. $x^6 - y^6 - 3x^2y^2(x^2-y^2)$.

135. $(x^2+6x+9)^2 - (x^2+5x+6)^2$.

136. $x^3 + (a+b-c)x^2 + (ab-ac-bc)x - abc$.

137. Factor $32 - x^5$ by the factor theorem.

138. Factor $16 + 5x - 11x^2$ by the factor theorem.

139. If n is odd, factor $x^n - a^n$ by the factor theorem.

140. If n is odd, factor $x^n + r^n$ by the factor theorem.

141. Factor $x^3 - 6bx^2 + 12b^2x - 8b^3$ by the factor theorem.

142. Discover by the factor theorem for what values of n, between 1 and 20, $x^n + a^n$ has no binomial factors.

EQUATIONS SOLVED BY FACTORING

141. **1.** Find the value of x in $x^2 + 1 = 10$.

FIRST PROCESS

$x^2 + 1 = 10$

$x^2 = 9$

$x \cdot x = 3 \cdot 3 \quad \therefore x = 3$

or $x \cdot x = -3 \cdot -3 \quad \therefore x = -3$

$\therefore x = \pm 3$

EXPLANATION. — Transposing the known term 1 to the second member, the first member contains the second power, only, of the unknown number. Separating each member into two equal factors,

$$x \cdot x = 3 \cdot 3 \quad \text{or} \quad x \cdot x = -3 \cdot -3.$$

Since, if $x = 3$, $x \cdot x = 3 \cdot 3$, and if $x = -3$, $x \cdot x = -3 \cdot -3$, the value of x that makes $x^2 = 9$, or that makes $x^2 + 1 = 10$, is either $+3$ or -3; that is, $x = \pm 3$.

Find the values of x in the following equations:

2. $x^2 + 3 = 28$.

3. $x^2 + 1 = 50$.

4. $x^2 - 5 = 59$.

5. $x^2 - 7 = 29$.

6. $x^2 + 3 = 84$.

7. $x^2 - 24 = 120$.

8. $x^2 + 11 = 180$.

9. $x^2 - 11 = 110$.

10. $x^2 - b^2 = a^2 - 2ab$.

11. $x^2 - 4n^2 = m^2 - 4mn$.

12. Find the value of x in $x^2 + 1 = 10$.

SECOND PROCESS

$x^2 + 1 = 10$

$x^2 - 9 = 0$

$(x - 3)(x + 3) = 0$

$\therefore x - 3 = 0$, whence $x = 3$

or $x + 3 = 0$, whence $x = -3$

$\therefore x = \pm 3$

EXPLANATION. — The first process is given in example 1.

In the second process, all terms are brought to the first member, which is factored as the difference of the squares of two numbers.

Since the product of the two factors is 0, one of them is equal to 0. This gives $x - 3 = 0$ or $x + 3 = 0$; whence $x = 3$ or $x = -3$; that is, $x = \pm 3$.

Solve the following equations:

13. $x^2 + 35 = 39$.

14. $x^2 - 50 = 50$.

15. $x^2 + 90 = 91$.

16. $x^2 - 31^2 = 0$.

17. $x^2 - 4b^2 = 0$.

18. $x^2 - 9n^2 = 0$.

19. $x^2 - 21 = 4$.

20. $x^2 - 56 = 8$.

21. $x^2 - 3a^2 = 6a^2$.

22. $x^2 + 5b^4 = 6b^4$.

23. $x^2 - 40 = 24$.

24. $32 - x^2 = 28$

25. $65 - x^2 = 16$.

26. $4x^2 - 8b^2 = 8b^2$.

27. $x^2 + 25 = 25 + m^2$.

28. $x^2 - 30 = 2(2b^2 - 15)$.

29. Solve $x^2 + 2am = a^2 + m^2$.

SOLUTION

$$x^2 + 2am = a^2 + m^2.$$
$$x^2 = a^2 - 2am + m^2.$$
$$x \cdot x = (a - m)(a - m).$$
or $$x \cdot x = -(a - m) \cdot -(a - m).$$
$$\therefore x = \pm(a - m).$$

Solve the following equations:

30. $x^2 - c^2 = d^2 - 2cd$.

31. $x^2 - b^2 = 4bc + 4c^2$.

32. $x^2 - n^2 = 6n + 9$.

33. $x^2 + 10a = a^2 + 25$.

34. $x^2 - a^2 = 2a + 1$.

35. $x^2 - m^2 = 8m + 16$.

36. $x^2 - c^2 = 36 - 12c$.

37. $x^2 - 4b^2 = 36 - 24b$.

38. $x^2 - a^2 = 9 - 6a$.

39. $x^2 - b^4 = 4 - 4b^2$.

40. $x^2 - a^2b^2 = 2ab + 1$.

41. $x^2 - r^4 = b^4 - 2r^2b^2$.

42. Find the value of x in $x^2 + 4x = 45$.

FIRST PROCESS

$$x^2 + 4x = 45$$
$$x^2 + 4x - 45 = 0$$
$$(x - 5)(x + 9) = 0$$
$$\therefore x - 5 = 0$$
or $$x + 9 = 0$$
$$\therefore x = 5 \text{ or } -9$$

SECOND PROCESS

$$x^2 + 4x = 45$$
$$x^2 + 4x + 4 = 49$$
$$(x + 2)(x + 2) = 7 \cdot 7 \text{ or } -7 \cdot -7$$
$$\therefore x + 2 = 7 \text{ or } -7$$
$$x = 7 - 2 \text{ or } -7 - 2$$
$$\therefore x = 5 \text{ or } -9$$

EXPLANATION. — The explanation given for example 12 will serve for the first process.

In the second process, it is seen that, by adding 4 to each member of the equation, the first member will become the square of the binomial $(x + 2)$. Solving for $(x + 2)$ as for x in previous examples, $x + 2 = \pm 7$; whence $x = \pm 7 - 2 = 5$ or -9.

SUGGESTION. — In the following examples, when the coefficient of the first power of the unknown number is *even*, either of the above processes may be used; but when it is *odd*, the first process is simpler.

Solve the following equations:

43. $x^2 - 6x = 40$.

44. $x^2 - 8x = 48$.

45. $x^2 - 5x = -4$.

46. $x^2 - 7x = 18$.

47. $x^2 + 10x = 56$.

48. $x^2 + 12x = 28$.

49. $x^2 - 3x = 40$.

50. $x^2 - 9x = 36$.

51. $x^2 + 11x = 26$.

52. $x^2 - 12x = 45$.

53. $y^2 - 15y = 54$.

54. $y^2 - 21y = 46$.

55. $x^2 - 10x = 96$.

56. $y^2 - 20y = 96$.

57. $y^2 + 12y = 85$.

58. $y^2 + 42 = 13y$.

59. $y^2 + 63 = 16y$.

60. $v^2 - 60 = 11v$.

61. $y^2 + 140 = 72y$.

62. $x^2 + 4x + 3 = 0$.

63. $x^2 + 6x + 8 = 0$.

64. $x^2 - 9x + 20 = 0$.

65. $x^2 + 11x + 30 = 0$.

66. $x^2 + x - 132 = 0$.

67. $32 = 4x + x^2$.

68. $3x = 88 - x^2$.

69. $160 = x^2 - 6x$.

70. $4y = y^2 - 192$.

71. $600 = y^2 - 10y$.

72. $x^2 + 16x - 36 = 0$.

73. $x^2 + 15x - 34 = 0$.

74. $y^2 - 8y - 84 = 0$.

75. $y^2 - 2ay + a^2 = 0$.

76. $x^2 + 2bx + b^2 = 0$.

77. $x^2 + 4ax + 4a^2 = 0$.

78. $z^2 + 22z + 121 = 0$.

79. $x^2 - (a + b)x + ab = 0$.

80. $x^2 + (c + d)x + cd = 0$.

81. $x^2+(a+2)x+2a=0.$ 83. $x^2-(a-d)x-ad=0.$

82. $y^2-(c-n)y-nc=0.$ 84. $x^2-(b+7)x+7b=0.$

85. $(2x+3)(2x-5)-(3x-1)(x-2)=1.$

86. $(2x-6)(3x-2)-(5x-9)(x-2)=4.$

87. Solve $6x^2+5x-21=0.$

SOLUTION

$$6x^2+5x-21=0.$$

Factoring, § 131, $$(2x-3)(3x+7)=0.$$

$$\therefore 2x-3=0,$$

or $$3x+7=0.$$

$$\therefore x=\tfrac{3}{2} \text{ or } -\tfrac{7}{3}.$$

Solve the following equations:

88. $3x^2+2x-1=0.$ 93. $7x^2+6x-1=0.$

89. $5x^2+4x-1=0.$ 94. $2v^2-9v-35=0.$

90. $3y^2+y-10=0.$ 95. $6y^2-22y+20=0.$

91. $3y^2-4y-4=0.$ 96. $3x^2+13x-30=0.$

92. $4y^2+9y-9=0.$ 97. $4x^2+13x-12=0.$

98. Solve the equation $x^3-2x^2-5x+6=0.$

SOLUTION

$$x^3-2x^2-5x+6=0.$$

Factoring by the factor theorem, $(x-1)(x-3)(x+2)=0.$

$$x-1=0, \text{ or } x-3=0, \text{ or } x+2=0.$$

$$\therefore x=1, \text{ or } 3, \text{ or } -2.$$

Solve the following equations:

99. $x^3-15x^2+71x-105=0.$ 101. $x^3-12x+16=0.$

100. $x^3+10x^2+11x-70=0.$ 102. $x^3-19x-30=0.$

103. $x^4+x^3-21x^2-x+20=0.$

104. $x^4-7x^3+x^2+63x-90=0.$

105. $x^4+8x^3-x^2-68x+60=0.$

106. $x^5-11x^4+45x^3-85x^2+74x-24=0.$

HIGHEST COMMON DIVISOR

142. 1. Name all the numbers that will exactly divide both a^4 and a^3. Which of these is of the highest degree?

2. What is the highest divisor common to b^2 and b^5? to x^2 and x?

3. Since the highest divisor common to a^4 and a^3 is a^3, to b^2 and b^5 is b^2, and to x^2 and x is x, what is the highest divisor common to $a^4b^2x^2$ and a^3b^5x?

4. What is the highest common divisor of $36\,a^2b$ and $90\,ab^2$? What prime factors, or divisors, are common to $36\,a^2b$ and $90\,ab^2$? How may the highest common divisor of $36\,a^2b$ and $90\,ab^2$ be found from their factors?

143. A number that exactly divides each of two or more algebraic expressions is called a **Common Divisor** of them.

The common divisors of $12\,a^2$ and $4\,a^3$ are 2, a, 4, a^2, $2\,a$, $4\,a$, $2\,a^2$, and $4\,a^2$.

An exact divisor of an expression is a *factor* of it.

Two expressions whose only common divisor, or factor, is 1 are said to be *prime to each other.*

$3\,x$ and $2\,a$ are prime to each other; also $x + y$ and $x - y$.

144. That common divisor, or factor, of two or more algebraic expressions which is of the highest degree is called their **Highest Common Divisor**, or **Highest Common Factor.**

The highest common divisor, or factor, of $12\,a^2$ and $4\,a^3$ is $4\,a^2$.

The abbreviation H. C. D. is used for *Highest Common Divisor.*

The *highest* common divisor in algebra corresponds to the *greatest* common divisor in arithmetic. But there would be an inaccuracy in applying the term greatest common divisor to literal numbers, since letters may represent any numbers, as, for instance, fractions.

Thus, if $a = \frac{1}{2}$, then $a^2 = \frac{1}{4}$, $a^3 = \frac{1}{8}$, and the higher the degree of the literal number, the less will be its arithmetical value. Consequently, it is inaccurate to speak of a^3, the *highest* common divisor of a^3, $2a^4b$, and $3a^5$, as their *greatest* common divisor, because a may represent a proper fraction.

145. PRINCIPLE. — *The highest common divisor, or factor, of two or more algebraic expressions is the product of all their common prime factors.*

146. To find the highest common divisor of expressions that may be factored readily by inspection.

EXAMPLES

1. What is the highest common divisor of $12a^4b^2c$ and $8a^2b^3c^3$?

FIRST PROCESS

$12a^4b^2c = 3 \times 2 \times 2 \times aaaa \times bb \times c$

$8a^2b^3c^3 = 2 \times 2 \times 2 \times aa \times bbb \times ccc$

H. C. D. $= 2 \times 2 \times aa \times bb \times c = 4a^2b^2c$

SECOND PROCESS

$12a^4b^2c = 4a^2b^2c \times 3a^2$

$8a^2b^3c^3 = 4a^2b^2c \times 2bc^2$

H. C. D. $= 4a^2b^2c$

EXPLANATION. — Since the highest common divisor of the expressions is the product of all their common prime factors (Prin.), and since the only prime factors common to the given expressions are 2, 2, a, a, b, b, and c, their product, $4a^2b^2c$, is the highest common divisor.

SUGGESTION. — Frequently the work may be abridged by grouping common factors, as in the second process. Since $3a^2$ and $2bc^2$ are prime to each other, $4a^2b^2c$ must contain all the common factors, and be the highest common divisor.

2. What is the H. C. D. of $3x^3 - 3xy^2$ and $x^3 - 2x^2y + xy^2$?

PROCESS

$3x^3 - 3xy^2 = 3x(x+y)(x-y)$

$x^3 - 2x^2y + xy^2 = x(x-y)(x-y)$

$\therefore$ H. C. D. $= x(x-y)$

EXPLANATION. — For convenience in selecting the common divisors, the expressions are resolved into their simplest factors.

Since the only common prime factors are x and $(x-y)$, the highest common divisor sought is their product, $x(x-y)$ (Prin.).

RULE. — *Separate the expressions into their prime factors.*

The product of all the common prime factors, each factor being taken the least number of times it occurs in any of the given expressions, is the highest common factor.

The factors that enter into the H. C. D. can often be selected without actually separating the expressions into their *prime* factors.

3. What is the H. C. D. of $5a^2c^2 - 5b^2c^2$ and $a^2x^3 - b^2x^3 + a^2y^3 - b^2y^3$?

SOLUTION

$$5a^2c^2 - 5b^2c^2 = 5c^2(a^2 - b^2)$$
$$a^2x^3 - b^2x^3 + a^2y^3 - b^2y^3 = (x^3 + y^3)(a^2 - b^2)$$
$$\therefore \text{H. C. D.} = a^2 - b^2$$

Find the highest common divisor of

4. $10x^3y^2$, $10x^2y^3$, and $15xy^4z$.
5. $70a^6b^3$, $21a^4b^4$, and $35a^4b^5$.
6. $8m^7n^3$, $28m^6n^4$, and $56m^5n^2$.
7. $4b^3cd$, $6b^2c^2$, and $24abc^3$.
8. $10(x-y)^4z^3$ and $15(z-y)(x-y)^3$.
9. $4(a+b)^3(a-b)$ and $b(a+b)^2(a-b)^2$.
10. $3(a^2-b^2)^2$ and $a(a-b)(a^2-b^2)$.
11. $x^2 - 2x - 15$ and $x^2 - x - 20$.
12. $x^4 - y^4$, $x^2 - y^2$, and $x + y$.
13. $a^2 + 7a + 12$ and $a^2 + 5a + 6$.
14. $x^3 + y^3$ and $x^2 + 2xy + y^2$.
15. $a^2 - x^2$ and $a^2 - 2ax + x^2$.
16. $a^2 - b^2$ and $a^2 + 2ab + b^2$.
17. $x^4 + x^2y^2 + y^4$ and $x^2 + xy + y^2$.
18. $x^3 + y^3$, $x^5 + y^5$, and $x^2y + xy^2$.
19. $a^4 + a^2b^4 + b^8$ and $3a^2 - 3ab^2 + 3b^4$.
20. $a^2 - x^2$, $a^2 + 2ax + x^2$, and $a^3 + x^3$.
21. $ax - y + xy - a$ and $ax^2 + x^2y - a - y$.
22. $a^2b - b - a^2c + c$ and $ab - ac - b + c$.

23. $1-4x^2$, $1+2x$, and $4a-16ax^2$.

24. $(a-b)(b-c)$ and $(c-a)(a^2-b^2)$.

25. $24x^3y^3+8x^2y^3$ and $8x^2y^3-8x^2y^3$.

26. $6x^2+x-2$ and $2x^2-11x+5$.

27. $16x^2-25$ and $20x^2-9x-20$.

28. x^2-6x+5 and x^3-5x^2+7x-3.

29. x^2-4 and $x^3-10x^2+31x-30$.

30. x^2-9 and $x^3-12x^2+41x-42$.

31. x^3-4x+3 and $x^3+x^2-37x+35$.

147. To find the highest common divisor of expressions that cannot be factored readily by inspection.

1. What are the exact divisors of ab? Will they be factors of 2 times ab? of a times ab? of m times ab?

2. If a number is an exact divisor of an expression, what will be its relation to any number of times the expression?

3. What common divisor have ax and ay? any number of times ax and ay, as $m \cdot ax$ and $n \cdot ay$?

4. If two numbers have a common divisor, what divisor has their sum? their difference? the sum or difference of any number of times the numbers?

5. What is the highest common divisor of $2am(x+y)$ and $3bm(x+y)$? How will it be affected, if the second number is multiplied by 7 or z? by 2 or a? How will it be affected, if the first number is multiplied by 5? by b?

6. By what numbers may one of two expressions be multiplied without affecting their highest common divisor?

7. How will the highest common divisor of $2am(x+y)$ and $3bm(x+y)$ be affected, if the first number is divided by 2? by a? by m? by $(x+y)$? How, if the second number is divided by b? by m?

8. By what numbers may one of two expressions be divided without affecting their highest common divisor?

148. PRINCIPLES. — 1. *A divisor of an expression is a divisor of any number of times the expression.* Hence, by § 85,

2. *A common divisor of two expressions is a divisor of their sum, of their difference, and of the sum or the difference of any number of times the expressions;* also,

3. *The highest common divisor of two expressions is not affected by multiplying or dividing either of them by numbers that are not factors of the other.*

EXAMPLES

1. Find the H. C. D. of $x^2 + 5x + 6$ and $4x^3 + 21x^2 + 30x + 8$.

PROCESS

$$
\begin{array}{r}
x^2+5x+6\overline{)4x^3+21x^2+30x+8}(4x+1 \\
\underline{4x^3+20x^2+24x} \\
x^2+6x+8 \\
\underline{x^2+5x+6} \\
x+2\overline{)x^2+5x+6}(x+3 \\
\underline{x^2+2x} \\
3x+6 \\
\underline{3x+6}
\end{array}
$$

$\therefore$ H. C. D. $= x + 2$.

EXPLANATION. — Since the highest common divisor cannot be higher than $x^2 + 5x + 6$, it will be $x^2 + 5x + 6$, if $x^2 + 5x + 6$ is exactly contained in $4x^3 + 21x^2 + 30x + 8$. By trial, it is found that it is not exactly contained in $4x^3 + 21x^2 + 30x + 8$, since there is a remainder of $x + 2$. Therefore, $x^2 + 5x + 6$ is not the highest common divisor.

Since $x^2 + 5x + 6$ contains the highest common divisor, $(4x + 1)$ times $x^2 + 5x + 6$ will also contain the highest common divisor (Prin. 1); and since both $4x^3 + 21x^2 + 30x + 8$ and $(4x + 1)(x^2 + 5x + 6)$ contain the highest common divisor, their difference, $x + 2$, must contain the highest common divisor (Prin. 2). Hence, the highest common divisor cannot be higher than $x + 2$.

$x + 2$ will be the highest common divisor, if it is exactly contained in $x^2 + 5x + 6$, since, if it is contained in $x^2 + 5x + 6$, it will be contained in any number of times $x^2 + 5x + 6$, as $(4x + 1)(x^2 + 5x + 6)$ (Prin. 1); and in the sum of $(4x + 1)(x^2 + 5x + 6)$ and $x + 2$, or $4x^3 + 21x^2 + 30x + 8$ (Prin. 2). By trial, $x + 2$ is found to be exactly contained in $x^2 + 5x + 6$. Therefore, $x + 2$ is the highest common divisor of the given expressions.

2. Find the H. C. D. of $6x^2+33x-63$ and $2x^3+11x^2-x-30$.

PROCESS

$$
\begin{array}{l}
3)6x^2+33x-63 \mid 2x^3+11x^2- \quad x-30(x \\
\quad 2x^2+11x-21 \mid 2x^3+11x^2-21x \\
\qquad\qquad\qquad\qquad 10)20x-30 \\
\qquad\qquad\qquad\qquad\quad 2x- \;\; 3)2x^2+11x-21(x+7 \\
\qquad\qquad\qquad\qquad\qquad\quad 2x^2- \;\; 3x \\
\qquad\qquad\qquad\qquad\qquad\qquad\quad 14x-21 \\
\therefore \text{ H. C. D.} = 2x-3. \qquad\qquad\qquad\qquad\quad 14x-21
\end{array}
$$

SUGGESTION. — Since only common factors are sought, factors that are not common to the given expressions, as 3 and 10, may be *rejected* from any expression before it is used as a divisor (Prin. 3).

3. Find the H. C. D. of

$$2x^3+5x^2-22x+15 \text{ and } 5x^3+18x^2-33x+10.$$

PROCESS

$$
\begin{array}{l}
2x^3+5x^2-22x+15)5x^3+18x^2- \;\; 33x+10 \\
\qquad\qquad\qquad\qquad\quad 2 \\
\qquad\qquad\qquad\qquad 10x^3+36x^2- \;\; 66x+20(5 \\
\qquad\qquad\qquad\qquad 10x^3+25x^2-110x+75 \\
\qquad\qquad\qquad\qquad\quad 11)11x^2+ \;\; 44x-55 \\
\qquad\qquad\qquad\qquad\qquad\quad x^2+ \;\; 4x- \;\; 5 \\
\\
x^2+4x-5)2x^3+5x^2-22x+15(2x-3 \\
\qquad\qquad\quad 2x^3+8x^2-10x \\
\qquad\qquad\qquad\quad -3x^2-12x+15 \\
\therefore \text{ H. C. D.} = x^2+4x-5. \qquad -3x^2-12x+15
\end{array}
$$

SUGGESTION. — When the first term of the divisor is not contained in the first term of the dividend an integral number of times, fractional quotients may be avoided by multiplying the polynomial taken for the dividend by some number not a factor of the divisor (Prin. 3). In the above example the simplest factor that may thus be introduced is 2, if $5x^3+18x^2-33x+10$ is taken for the dividend; or 5, if $2x^3+5x^2-22x+15$ is taken for the dividend.

4. Find the H. C. D. of

$$30\,amx^2 - 21\,amx - 99\,am \text{ and } 42\,abx^3 + 33\,abx^2 - 45\,abx.$$

PROCESS

$$30\,amx^2 - 21\,amx - 99\,am)\,42\,abx^3 + 33\,abx^2 - 45\,abx$$

Reject m (Prin. 3). Reject bx (Prin. 3).

$$30\,ax^2 - 21\,ax - 99\,a)\,42\,ax^2 + 33\,ax - 45\,a$$

Reserve the common factor $3\,a$ as a factor of the H. C. D.

$$\begin{array}{r}
10\,x^2 - 7\,x - 33)\,14\,x^2 + 11\,x - 15 \\
7 \qquad\qquad\qquad\quad 5 \\
\hline
70\,x^2 - 49\,x - 231)\,70\,x^2 + 55\,x - 75\,(1 \\
70\,x^2 - 49\,x - 231 \\
\hline
52)\,104\,x + 156 \\
2\,x + 3 \\
2\,x + 3)\,10\,x^2 - 7\,x - 33\,(5\,x - 11 \\
10\,x^2 - 7\,x - 33 \\
\hline
\end{array}$$

$\therefore$ H. C. D. $= 3\,a(2\,x + 3)$.

SUGGESTION. — Since each of the polynomials contains a factor not found in the other, these two factors may be rejected (Prin. 3). Consequently, m is rejected from the first polynomial, and bx from the second.

To simplify the process the common factor $3\,a$ is removed and *reserved* as a factor of the H. C. D.

5. Find the H. C. D. of $9\,x^2 - 35\,x + 24$ and $29\,x - 8\,x^2 - 15$.

PROCESS

$$\begin{array}{r}
-8\,x^2 + 29\,x - 15 \\
9\,x^2 - 35\,x + 24 \\
\hline
x^2 - 6\,x + 9)\,9\,x^2 - 35\,x + 24\,(9 \\
9\,x^2 - 54\,x + 81 \\
\hline
19)\,19\,x - 57 \\
x - 3)\,x^2 - 6\,x + 9\,(x - 3 \\
x^2 - 6\,x + 9 \\
\hline
\end{array}$$

$\therefore$ H. C. D. $= x - 3$.

SUGGESTION. — Since the sum or the difference of two expressions contains their highest common divisor (Prin. 2), it is evident that at the outset a simpler expression that will contain the highest common divisor may be obtained by adding the given expressions, giving $x^2 - 6\,x + 9$.

Find the H. C. D. of

6. $x^2+2x-24$ and $2x^2+7x-30$.

7. $2x^2-x-21$ and $4x^2+4x-63$.

8. $3x^2+10x-8$ and $6x^2-7x+2$.

9. $2x^3-6x^2+7x-6$ and $2x^3+4x^2-3x+9$.

10. $x^3+9x^2+26x+24$ and $2x^3+14x^2+20x$.

11. Find the H. C. D. of

$3ax^3-4ax^2-13ax+14a$ and $3abx^3+5abx^2-10abx-42ab$

FIRST PROCESS

$3ax^3-4ax^2-13ax+14a)3abx^3+5abx^2-10abx-42ab$

Reserve the common factor a as a factor of the H. C. D.

$3x^3-4x^2-13x+14)3bx^3+5bx^2-10bx-42b(b$

$3bx^3-4bx^2-13bx+14b$

$b)9bx^2+3bx-56b$

$9x^2+3x-56)3x^3-4x^2-13x+14$

3

$9x^3-12x^2-39x+42(x$

$9x^3+3x^2-56x$

$-15x^2+17x+42$

$-15x^2+17x+42)9x^2+3x-56$

5

$45x^2+15x-280(-3$

$45x^2-51x-126$

$22)66x-154$

$3x-7)-15x^2+17x+42(-5x-6$

$-15x^2+35x$

$-18x+42$

$-18x+42$

$\therefore$ H. C. D. $= a(3x-7)$.

Since the arrangement of the dividend, divisor, and quotient may be either: Divisor) Dividend (Quotient; or Quotient) Dividend (Divisor: by using these two arrangements *alternately*, the above process may be more compactly written as follows:

SECOND PROCESS

$3ax^3 - 4ax^2 - 13ax + 14a)3abx^3 + 5abx^2 - 10abx - 42ab.$

Reserve the common factor a as a factor of the H.C.D.

	$3x^3 - 4x^2 - 13x + 14$	$3bx^3 + 5bx^2 - 10bx - 42b$	
	3	$3bx^3 - 4bx^2 - 13bx + 14b$	b
		$b)9bx^2 + 3bx - 56b$	
	$9x^3 - 12x^2 - 39x + 42$	$9x^2 + 3x - 56$	
x	$9x^3 + 3x^2 - 56x$	5	
	$-15x^2 + 17x + 42$	$45x^2 + 15x - 280$	
		$45x^2 - 51x - 126$	-3
		$22)66x - 154$	
$-5x$	$-15x^2 + 35x$	$3x - 7$	
	$-18x + 42$		
-6	$-18x + 42$	$\therefore$ H.C.D. $= a(3x - 7)$.	

SUGGESTION. — When the quotient consists of more than one term, for convenience each term is placed opposite the corresponding part of the dividend or product.

RULE. — *Divide one expression by the other, and if there is a remainder, divide the divisor by it; then divide the preceding divisor by the last remainder, and so on, until there is no remainder. The last divisor will be the highest common divisor.*

If any remainder does not contain the letter of arrangement, the expressions have no common divisor in that letter.

If more than two expressions are given, find the highest common divisor of any two, then of this divisor and another, and so on. The last divisor will be the highest common divisor.

1. If either expression contains a monomial factor not found in the other, it should be rejected before beginning the process.

2. A common factor of the expressions should be removed before beginning the division, but it must appear as a factor of the highest common divisor.

3. When necessary, to avoid fractional quotients, any dividend or divisor may be multiplied or divided by any number not a factor of the other.

4. The highest common divisor has an ambiguous sign. For, if a positive divisor is contained in a dividend, the same negative divisor also will be contained in that dividend, but the signs of the quotient will be changed. It is not customary to write both divisors.

149. The principle, that the exact divisor reached by the process given in the rule is the highest common divisor, may be proved as follows:

Let A and B represent any two polynomials freed of monomial factors, the degree of B being not higher than that of A.

Divide A by B, and let the quotient be m and the remainder D; divide B by D, and let the quotient be n and the remainder E; divide D by E, and let the quotient be r and the remainder zero; that is, let E be an exact divisor of D.

It is to be proved that E is the highest common divisor of A and B.

PROCESS

$$\begin{array}{l} B)A(m \\ \underline{mB} \\ D)B(n \\ \underline{nD} \\ E)D(r \\ \underline{rE} \\ 0 \end{array}$$

Since the minuend is equal to the subtrahend plus the remainder,

$$A = mB + D, \text{ and } A - mB = D;$$
$$B = nD + E, \text{ and } B - nD = E; \text{ and } D = rE.$$

Since the division has terminated, E is a common divisor of D and nD (Prin. 1); also of D and $nD+E$, or B (Prin. 2); also of B and mB (Prin. 1); also of B and $mB + D$, or A (Prin. 2). That is, E is a common divisor of B and A.

Every common divisor of A and B is a divisor of mB (Prin. 1); and of $A - mB$, or D (Prin. 2). Therefore, every common divisor of A and B is a divisor of nD (Prin. 1); and of $B - nD$, or E (Prin. 2).

But, since no divisor of E can be of higher degree than E itself, E is the highest common divisor of A and B.

150. The principle, that the highest common divisor of several expressions may be obtained by finding the highest common divisor of two of them, then of this result and a third expression, and so on, may be proved as follows:

Let P be the highest common divisor of A and B, and Q the highest common divisor of P and a third expression C.

Then, since P contains all the common factors of A and B, and Q contains of these particular factors only such as are factors of C also, Q is the highest common divisor of A, B, and C.

This method may be extended to embrace any number of expressions.

Find the H. C. D. of

12. $2x^3-7x^2+2x+3$ and $2x^3+7x^2-5x-4$.

13. $9x^3+18x^2-x-10$ and $3x^3+13x^2+2x-8$.

14. $1-2x-5x^2+6x^3$ and $1+5x+2x^2-8x^3$.

15. $1-4x+x^2+6x^3$ and $1+3x-6x^2-8x^3$.

16. $1-x-14x^2+24x^3$ and $36x^3-24x^2+x+1$.

17. $m^3-4m^2-20m+48$ and $m^3-m^2-14m+24$.

18. $3a^3+20a^2-a-2$ and $3a^3+17a^2+21a-9$.

19. $8ax^2+22ax+15a$ and $6bx^2+11bx+3b$.

20. $20b^2c-2bc-4c$ and $8a^2b^3c-4a^2bc+a^2c$.

21. $21ax-17ax^2-5ax^3+ax^4$ and $7ax+34ax^2-5ax^3$.

22. x^3-7x+6, $x^4-2x^3-9x^2+18x$, x^3+x^2-4x-4.

23. x^3-5x+4, x^4-2x^3+1, x^6+4x^3-3x-2.

24. $1+4x^2+5x^3$, $2+5x+3x^4$, $x^6-4x^4+5x^2-2$.

25. $3+x-8x^2+4x^3$, $3-8x-8x^2+8x^3$, $16x^4-48x^3+81$.

26. $x^3-6x^2-5x-14$, $x^3-10x^2+20x+7$, $x^4-310x-231$.

27. Find the H. C. D. of $x^6+x^4+x^3-x-2$ and $2x^6+x^5-x^3-x^2-1$.

PROCESS BY DETACHED COEFFICIENTS

$$
\begin{array}{l|l|l|l}
 & 1+0+1+1+0-1-2 & 2+1+0-1-1+0-1 & 2 \\
 & & 2+0+2+2+0-2-4 & \\
1 & 1-2-3-1+2+3 & 1-2-3-1+2+3 & \\
 & 2+4+2-2-4-2 & & \\
2 & 2-4-6-2+4+6 & & \\
 & 8)8+8+0-8-8 & & \\
 & 1+1+0-1-1 & 1+1+0-1-1 & 1 \\
 & & -3-3+0+3+3 & \\
 & \therefore \text{H. C. D.} = x^4+x^3-x-1. & -3-3+0+3+3 & -3
\end{array}
$$

Find the H. C. D. of

28. $x^5-x^4-2x^3-x^2+x+2$ and $x^5+3x^4+3x^3+x^2-x-1$.

29. $x^5+x^4-x^2-7x-4$ and $2x^5+3x^4+3x^3+3x^2-7x-4$.

30. $x^5-2x^4-2x^3-11x^2-x-15$ and $2x^5-7x^4+4x^3-15x^2+x-10$.

31. $a^5-3a^4-3a^3-3a^2-19a-15$ and $a^5+3a^4-3a^3+9a^2-a-15$.

32. $5a^5+a^4-11a^3+9a^2-8a+4$ and $2a^5-a^4-5a^3+8a^2-4a$.

33. x^5-5x+4 and $x^4-x^3-3x^2-5x-12$.

34. a^3+3a^2-2a-6 and $a^5+4a^4+4a^3+4a^2-a-12$.

35. $1-4a^3+3a^4$ and $1+a-a^2-5a^3+4a^4$.

36. $2-a+3a^2+5a^3-a^4$ and $4-4a+a^2-9a^4$.

37. $y^5+13y^2+20y-14$ and $7-3y-20y^2+2y^3-y^5$.

38. $6x^3-11x^2-35x$, $30x^2-115x+35$, $2x^3-5x^2-5x-7$.

LOWEST COMMON MULTIPLE

151. 1. What number exactly contains 2, 5, a, and b, or is a *multiple* of 2, 5, a, and b?

2. What different prime factors must enter into every number that will contain $4a^3b$, a^2b^2, and $10ab^3$, or must be found in every common multiple of $4a^3b$, a^2b^2, and $10ab^3$?

3. What is the lowest power of a that common multiples of $4a^3b$, a^2b^2, and $10ab^3$ can contain? What is the lowest power of b? of 2? of 5?

What, then, is the lowest common multiple of $4a^3b$, a^2b^2, and $10ab^3$?

To what is the *lowest common multiple* of two or more expressions equal?

152. An expression that exactly contains each of two or more given expressions is called a **Common Multiple** of them.

$6abx$ is a common multiple of a, $3b$, $2x$, and $6abx$. These numbers may have other common multiples, as $12abx$, $6a^2b^2x$, $18a^3bx^2$, etc.

153. The expression of *lowest degree* that will exactly contain each of two or more given expressions is called their **Lowest Common Multiple.**

$6abx$ is the lowest common multiple of a, $3b$, $2x$, and $6abx$.

The abbreviation L. C. M. is used for *Lowest Common Multiple.*

The *lowest* common multiple in algebra corresponds to the *least* common multiple in arithmetic. But, since letters may represent any numbers, as, for instance, numbers not prime to each other or fractions, the term *least* is not applicable to algebraic common multiples.

Thus, the algebraic lowest common multiple of a^2b^2, ab^3, and bx is a^2b^3x. If $a = 4$, $b = 3$, and $x = 2$, a^2b^3x, the *lowest* common multiple of the given expressions, is equal to 864. If, however, the values of a, b, and x are substituted for those letters, the given expressions become 144, 108, and 6; and their *least* common multiple is 432.

It is thus seen that the *lowest* common multiple of two or more expressions is not necessarily their *least* common multiple.

154. PRINCIPLE. — *The lowest common multiple of two or more algebraic expressions is the product of all their different prime factors, using each factor the greatest number of times it occurs in any of the expressions.*

155. To find the lowest common multiple of expressions that may be factored readily by inspection.

EXAMPLES

1. What is the L. C. M. of $12x^2yz^4$, $6a^2xy^2$, and $8axyz^2$?

PROCESS

$$\begin{aligned} 12x^2yz^4 &= 2 \cdot 2 \cdot 3 \cdot x^2 \cdot y \cdot z^4 \\ 6a^2xy^2 &= 2 \cdot 3 \cdot a^2 \cdot x \cdot y^2 \\ 8axyz^2 &= 2 \cdot 2 \cdot 2 \cdot a \cdot x \cdot y \cdot z^2 \\ \text{L. C. M.} &= 2 \cdot 2 \cdot 2 \cdot 3 \cdot a^2 \cdot x^2 \cdot y^2 \cdot z^4 = 24a^2x^2y^2z^4 \end{aligned}$$

EXPLANATION. — The lowest common multiple of the numerical coefficients is found as in arithmetic. It is 24.

The literal factors of the lowest common multiple are each letter with the highest exponent it has in any of the given expressions (Prin.). They are, therefore, a^2, x^2, y^2, and z^4.

The product of the numerical and literal factors, $24a^2x^2y^2z^4$, is the lowest common multiple of the given expressions.

2. What is the L. C. M. of $x^2 - 2xy + y^2$, $x^2 - y^2$, and $x^3 + y^3$?

PROCESS

$$\begin{aligned} x^2 - 2xy + y^2 &= (x - y)(x - y) \\ x^2 - y^2 &= (x - y)(x + y) \\ x^3 + y^3 &= (x + y)(x^2 - xy + y^2) \\ \hline \text{L. C. M.} &= (x - y)^2(x + y)(x^2 - xy + y^2) \\ &= (x - y)^2(x^3 + y^3) \end{aligned}$$

RULE. — *Factor the expressions as far as may be necessary to discover their different prime factors.*

Find the product of all their different prime factors, using each factor the greatest number of times it occurs in any of the given expressions.

The factors of the L. C. M. may often be selected without separating the expressions into their *prime* factors.

Find the L. C. M. of

3. a^3x^2y, a^2xy^3, and ax^2y.
4. $10\,a^2b^2c^2$, $5\,ab^2c$, and $25\,b^3c^3d^3$.
5. $16\,a^2b^3c$, $24\,c^3de$, and $36\,a^4b^2d^2e^3$.
6. $18\,a^2br^2$, $12\,p^2q^2r$, and $54\,ab^2p^3q$.
7. x^my^2, $x^{m-1}y^3$, $x^{m-3}y^4$, and $x^{m+1}y$.
8. $x^2 - y^2$ and $x^2 + 2xy + y^2$.
9. $x^2 - y^2$ and $x^2 - 2xy + y^2$.
10. $x^2 - y^2$, $x^2 + 2xy + y^2$, and $x^2 - 2xy + y^2$.
11. $a^2 - n^2$ and $3a^3 + 6a^2n + 3an^2$.
12. $x^4 - 1$ and $a^2x^2 + a^2 - b^2x^2 - b^2$.
13. $a^2 + 1$, $ab - b$, $a^2 + a$, and $a^2 - 1$.
14. $2x + y$, $2xy - y^2$, and $4x^2 - y^2$.
15. $1 + x$, $x - x^2$, $1 + x^2$, and $x^2(1 - x)$.
16. $3 + a$, $9 - a^2$, $3 - a$, and $5a + 15$.
17. $a - b$, $b - c$, $b + a$, and $a^2 - b^2$.

18. $2x+2$, $5x-5$, $3x-3$, and x^2-1.

19. $3x-9y$, $3x^2+27y^2$, and $2x+6y$.

20. $16b^2-1$, $12b^2+3b$, $20b-5$, and $2b$.

21. $1-2x^2+x^4$, $(1-x)^2$, and $1+2x+x^2$.

22. $1-a$, $1+a$, $1+a^2$, $1+a^4$, and $1+a^8$.

23. $xy-y^2$, x^2+xy, $xy+y^2$, and x^2+y^2.

24. x^3-y^3, x^2+xy+y^2, and x^2-xy.

25. b^2-5b+6, $b^2-7b+10$, and $b^2-10b+16$.

26. x^2+7x-8, x^2-1, $x+x^2$, and $3ax^2-6ax+3a$.

27. a^2-x^2, $a-2x$, a^2+2ax, and $a^3-3a^2x+2ax^2$.

28. m^3-x^3, m^2+mx, m^2+mx+x^2, and $(m+x)x^2$.

29. x^2-3x+2, x^2+4x+4, x^2+3x+2, and x^2-1.

30. x^2-y^2, $x^4+x^2y^2+y^4$, x^3+y^3, and x^2+xy+y^2.

31. $x^3+x^2y+xy^2+y^3$ and $x^3-x^2y+xy^2-y^3$.

32. a^2+4a+4, a^2-4, and a^4-16.

33. $a^2-(b+c)^2$, $b^2-(c+a)^2$, and $c^2-(a+b)^2$.

34. $1-a+a^2$, $1+a+a^2$, and $1+a^2+a^4$.

35. a^4+4 and a^4-2a^3+4a-4.

36. a^6-b^3 and $a^3+a^4b^2+b^4$.

37. x^6+y^6 and $a^2x^2-b^2y^2+a^2y^2-b^2x^2$.

38. $a^4-2a^3b+a^2b^2-9b^4$ and $a^4+5a^2b^2+9b^4$.

39. a^4-a^2+1, a^6+1, a^4+a^2+1, and a^2-1.

40. Find the lowest common multiple of $x^3+6x^2+5x-12$ and $x^3-8x^2+19x-12$.

SOLUTION

$$\begin{aligned} x^3+6x^2+5x-12 &= (x-1)(x^2+7x+12) \\ &= (x-1)(x+3)(x+4). \\ x^3-8x^2+19x-12 &= (x-1)(x^2-7x+12) \\ &= (x-1)(x-3)(x-4). \\ \therefore \text{L. C. M.} &= (x-1)(x+3)(x-3)(x+4)(x-4) \\ &= (x-1)(x^2-9)(x^2-16). \end{aligned}$$

Suggestion. — In solving the following the Factor Theorem will be found useful.

41. $x^3 - 6x^2 + 11x - 6$ and $x^3 - 9x^2 + 26x - 24$.

42. $x^3 - 5x^2 - 4x + 20$ and $x^3 + 2x^2 - 25x - 50$.

43. $x^3 + 3x^2 - 4$ and $x^3 + x^2 - x - 1$.

44. $x^3 - 4x^2 + 5x - 2$ and $x^3 - 8x^2 + 21x - 18$.

45. $x^3 + 5x^2 + 7x + 3$ and $x^3 - 7x^2 - 5x + 75$.

46. $x^3 + 2x^2 - 4x - 8$, $x^3 - x^2 - 8x + 12$, $x^3 + 4x^2 - 3x - 18$.

47. $x^3 - 9x^2 + 23x - 15$, $x^3 + x^2 - 17x + 15$, $x^3 + 7x^2 + 7x - 15$.

48. $x^3 + 7x^2 + 14x + 8$, $x^3 + 3x^2 - 6x - 8$, $x^3 + x^2 - 10x + 8$.

156. To find the lowest common multiple of expressions that cannot be factored readily by inspection.

$$x^2 - 3x + 2 = (x-1)(x-2). \quad (1)$$

$$x^2 - 5x + 6 = (x-2)(x-3). \quad (2)$$

$$x^2 - 7x + 12 = (x-3)(x-4). \quad (3)$$

$$\text{L. C. M.} = (x-1)(x-2)(x-3)(x-4).$$

1. Find the lowest common multiple of expressions (1) and (2) from their factors; from the product of their factors. By what factor of the two expressions must the product be divided to obtain the lowest common multiple?

2. How, then, may the lowest common multiple of *two* expressions be found?

3. Since $(x-1)(x-2)(x-3)$ is the lowest common multiple of the first two expressions, what factor of the third expression must the lowest common multiple of all the expressions contain?

157. Principles. — 1. *The lowest common multiple of two expressions is equal to their product divided by their highest common divisor; or, it is equal to either of them multiplied by the quotient of the other divided by the highest common divisor.*

2. *The lowest common multiple of several expressions may be obtained by finding the lowest common multiple of two of them; then of this result and a third expression; and so on.*

Proof of Principle 1.

Let F be the highest common divisor, or factor, of A and B, and L their lowest common multiple. Let F be contained a times in A and b times in B, or let $A = aF$ and let $B = bF$.

It is to be proved that $L = \frac{A \times B}{F}$, or $A \times \frac{B}{F}$, or $B \times \frac{A}{F}$.

Since F contains *all* the common factors of A and B, a and b have no common factors; consequently, since $A = aF$ and $B = bF$,

$$L = abF.$$

Multiplying by F, $$FL = abFF;$$

but $$A \times B = aF \times bF = abFF.$$

Therefore, Ax. 1, $$FL = A \times B,$$

and $$L = \frac{A \times B}{F}, \text{ or } A \times \frac{B}{F}, \text{ or } B \times \frac{A}{F}.$$

Proof of Principle 2.

Let L be the lowest common multiple of A and B, and M the lowest common multiple of L and a third expression C.

It is to be proved that M is the lowest common multiple of A, B, and C.

Since L is the expression of lowest degree that is exactly divisible by both A and B, and M is the expression of lowest degree that is exactly divisible by both L and C, M is the expression of lowest degree that is exactly divisible by A, B, and C.

EXAMPLES

1. Find the L. C. M. of $x^3 + 6x^2 + 11x + 6$ and $x^3 - 4x^2 + x + 6$.

PROCESS

$$\text{Prin. 1, L. C. M.} = \frac{(x^3 + 6x^2 + 11x + 6)(x^3 - 4x^2 + x + 6)}{\text{H. C. D.}}$$

$$= \frac{(x+1)(x^2 + 5x + 6)(x+1)(x^2 - 5x + 6)}{x+1}$$

$$= (x+1)(x^2 + 5x + 6)(x^2 - 5x + 6)$$

or $$(x+1)(x+2)(x+3)(x-2)(x-3)$$

or $$(x+1)(x^2 - 4)(x^2 - 9)$$

Find the L. C. M. of

2. $4a^3 + 7a^2 + 10a - 3$ and $4a^3 + 9a^2 + 14a + 3$.

3. $2a^3 - 11a^2 + 18a - 14$ and $2a^3 + 3a^2 - 10a + 14$.

4. $5x^3 - 11x^2 + 3x + 12$ and $5x^3 - 19x^2 + 27x - 12$.

5. $4x^3-14x^2+22x-8$ and $2x^4-3x^3-x^2+12x$.

6. $6a^3+3a^2-15a-75$ and $2a^3+11a^2+25a+25$.

7. $4a^3-27a^2-2a+15$ and $2a^4-9a^3-28a^2-15a$.

8. $3c^3-11c^2-32c-16$ and $3c^3-19c^2+8c+16$.

9. $4x^4-7x^3+7x^2-11x+6$ and $2x^4+x^3-x^2-x-6$.

10. x^4-x^3-3x+9 and $3ax^4-3ax^3-18ax^2+45ax-27a$.

11. $20x^3+40x^2+25x+125$ and $6x^3+7x^2+10x+25$.

12. $12m^3-18m^2+26m-10$ and $15m^3-9m^2+19m+10$.

13. $6a^3x-5a^2x-18ax-8x$ and $6a^3b-13a^2b-6ab+8b$.

14. $4x^3+4x^2y-5xy^2+25y^3$ and $4x^3-16x^2y+25xy^2-25y^3$.

15. $10a^3+29a^2-36a+9$ and $8a^3+34a^2+9a-9$.

16. $4x^4-17x^2y^2+4y^4$ and $2x^4-x^3y-3x^2y^2-5xy^3-2y^4$.

17. $5x^4+8x^3-27x^2+14x-10$ and $3x^4+4x^3-17x^2+14x-10$.

18. $2x^4-9x^3+18x^2-18x+9$ and $3x^4-11x^3+17x^2-12x+6$.

19. $3a^4+13a^3-19a^2+12a-4$ and $4a^4+22a^3-2a^2+2a+4$.

20. $6x^2+5x-6$, $8x^2+10x-3$, $10x^2+9x-9$.

21. $x^4-2x^3+x^2-1$, x^4-x^2+2x-1, x^4-3x^2+1.

22. x^4-7x^2+9, $x^4+2x^3+x^2-9$, x^4-x^2-6x-9.

23. $x^4-4x^3+4x^2-16$, x^4-12x^2+16, $x^4-4x^2+16x-16$.

24. $x^4-4x^3+4x^2-25$, $x^4-4x^2+20x-25$, x^4-14x^2+25.

25. $4x^4+5x^2-x-1$, $6x^4+x^3+8x^2-1$, $36x^4-13x^2+1$.

26. $10x^4+7x^3-33x^2+26x-10$ and $2x^4+7x^3+5x^2-4x-10$.

27. $16x^4+16x^3-48x^2-36x+27$ and $24x^4+20x^3-74x^2-45x+45$.

28. $10x^4+7x^3+2x^2-x-2$ and $6x^3+5x^2+4x+1$.

29. $5x^4+3x^3+6x^2+x+3$ and $15x^3+14x^2+x+12$.

30. $2x^3-x^2-3x+2$, $4x^3+6x^2-2x-4$, $4x^3-5x+2$.

31. x^3-1, $2x^3+2x^2-5x+1$, x^3-3x+2.

FRACTIONS

158. A fraction is *expressed* by two numbers, one called the *numerator*, written above a line, and the other the *denominator*, written below the line. Thus, $\frac{a}{b}$ is a fraction.

If a and b represent positive integers, as 3 and 4, the fraction $\frac{a}{b}$ is equal to $\frac{3}{4}$; that is, it represents 3 of the 4 equal parts of anything. This is the arithmetical notion of a fraction.

But, since a and b may represent any numbers, positive or negative, integral or fractional, rational or irrational, $\frac{a}{b}$ may represent an expression like $\frac{4}{5\frac{2}{3}}$. Since a thing cannot be divided into $5\frac{2}{3}$ equal parts, algebraic fractions are not accurately described by the definition commonly given in arithmetic. But, since an expression like $\frac{20}{4}$, regarded as 20 fourths, is equivalent to 5, or $20 \div 4$, it is evident that the numerator of a fraction may be regarded as a dividend, and the denominator as its divisor; and this interpretation of a fraction is broad enough to include the fraction $\frac{a}{b}$ when a and b represent any numbers whatever. Hence,

The expression of an unexecuted division, in which the dividend is the numerator and the divisor the denominator, is an **Algebraic Fraction.**

The fraction $\frac{a}{b}$ is read, '*a divided by b.*'

159. The numerator and denominator of a fraction are called its **Terms.**

160. An expression, some of whose terms are integral and some fractional, is called a **Mixed Number,** or a **Mixed Expression.**

$a - \frac{a-b}{c}$, $\frac{x^2}{a^2} - 2 + \frac{a^2}{x^2}$, and $a - b + \frac{1}{ab}$ are mixed expressions.

REDUCTION OF FRACTIONS

161. The process of changing the form of an expression without changing its value is called **Reduction.**

162. To reduce fractions to higher or lower terms.

163. A fraction is in its **Lowest Terms** when its terms have no common divisor.

164. 1. How many eighths are there in $\frac{1}{2}$? in $\frac{x}{2}$? in $\frac{3x}{4}$? in $\frac{5ab}{4}$? in $\frac{4x}{16}$? in $\frac{9a}{24}$? in $\frac{8xy}{32}$?

2. How many tenths are there in $\frac{a}{2}$? in $\frac{6a}{5}$? in $\frac{6a}{20}$?

3. If a dividend is multiplied by any number, as 2, and the divisor is multiplied by the same number, how is the quotient affected?

4. If a dividend is divided by any number, as 2, and the divisor is divided by the same number, how is the quotient affected?

5. Since a fraction may be regarded as an indicated division, what may be done to the terms of a fraction without changing the *value* of the fraction?

165. PRINCIPLE. — *Multiplying or dividing both terms of a fraction by the same number does not change the value of the fraction.*

The proof of the principle is as follows:

Let a and b be any two numbers, a the dividend, b the divisor, and $\frac{a}{b}$ the quotient. Also, let m be any number.

It is to be proved that $\frac{a}{b} = \frac{ma}{mb}$.

Since the quotient multiplied by the divisor equals the dividend,

$$\frac{a}{b} \times b = a. \qquad (1)$$

Multiplying (1) by m, Ax. 4, $\frac{a}{b} \times mb = ma.$ (2)

Dividing (2) by mb, Ax. 5, $\frac{a}{b} = \frac{ma}{mb}.$ (3)

Hence, the terms of any fraction, as $\frac{a}{b}$, may be multiplied by any number, or the terms of any fraction, as $\frac{ma}{mb}$, may be divided by any number, without changing the value of the fraction.

Examples

1. Reduce $\frac{a}{a+b}$ to a fraction whose denominator is $a^2 - b^2$.

PROCESS

$$(a^2 - b^2) \div (a + b) = a - b$$

$$\therefore \quad \frac{a}{a+b} = \frac{a(a-b)}{(a+b)(a-b)} = \frac{a^2 - ab}{a^2 - b^2}$$

Explanation. — Since the required denominator is $(a - b)$ times the given denominator, both terms of the fraction must be multiplied by $(a - b)$ (Prin.).

2. Reduce $\frac{21\,a^2x^2y}{30\,a^3xz}$ to its lowest terms.

PROCESS

$$\frac{21\,a^2x^2y}{30\,a^3xz} = \frac{7\,xy}{10\,az}$$

Explanation. — Since a fraction is in its lowest terms when its terms have no common divisor, the given fraction may be reduced to its lowest terms by removing in succession all common divisors of its numerator and denominator (Prin.), as, 3, a, a, and x; or by dividing the terms by their highest common divisor, $3\,a^2x$.

3. Change $\frac{a}{2\,b}$ to a fraction whose denominator is $4\,b^2$.

4. Change $\frac{5\,a}{6}$ to a fraction whose denominator is 42.

5. Change $\frac{3\,x}{11\,b}$ to a fraction whose denominator is $55\,b$.

6. Change $\frac{3\,a}{14\,x}$ to a fraction whose denominator is $84\,xy$.

7. Change $\frac{4\,a^2}{5\,y}$ to a fraction whose denominator is $20\,y^3$.

8. Change $\frac{x-3}{x-1}$ to a fraction whose denominator is $(x-1)^2$.

9. Change $\frac{2x-5}{2x+5}$ to a fraction whose denominator is $(2x+5)^2$.

10. Change $\frac{a}{3-a}$ to a fraction whose numerator is $3a+a^2$.

11. Reduce $\frac{a-b}{a+b}$ to a fraction whose denominator is a^2-b^2.

12. Reduce $\frac{x-y}{2x+y}$ to a fraction whose numerator is x^2-y^2.

13. Reduce $\frac{d-c}{b-a}$ to a fraction whose denominator is $a-b$.

14. Reduce $\frac{-1}{x-2}$ to a fraction whose denominator is $4-x^2$.

Reduce the following to their lowest terms:

15. $\frac{a^2xy^2}{a^3xy}$.

16. $\frac{m^3n^3}{am^2n^4}$.

17. $\frac{a^2b^2x^2}{b^3xy^2}$.

18. $\frac{16\,m^2nx^2z^2}{40\,am^3yz^3}$.

19. $\frac{210\,bc^2d}{750\,ab^2c}$.

20. $\frac{35\,a^2bcd^3}{42\,ab^2cd^4}$.

21. $\frac{77\,a^7x^5b^3y}{121\,a^3b^5c^7}$.

22. $\frac{-25\,x^2y^5z^2}{-100\,x^4y^3}$.

23. $\frac{x^{m+2}y^2}{x^my^4}$.

24. $\frac{x^{m-2}a^2}{x^m}$.

25. $\frac{x^{m+1}y}{xy^{m+1}}$.

26. $\frac{x^{m-n+1}}{ax}$.

27. $\frac{a^xb^y}{3\,a^{2x}b}$.

28. $\frac{a^{m+2r}y^{2r}}{2\,a^ry^{4r}}$.

29. $\frac{ax^{m-n+1}}{bx^{m-n}}$.

30. $\frac{na^{n-2}b^2}{n(n-2)ab}$.

31. $\frac{a^2-b^2}{a^2+2ab+b^2}$.

32. $\frac{a^2-2ab+b^2}{a^2-b^2}$.

33. $\frac{4a^2-9x^2}{8a^3+27x^3}$.

34. $\frac{3a^2+3ab}{a^4+ab^3}$.

35. $\frac{3x^2y-6xy}{x^4y-8xy}$.

36. $\frac{3a^2b-3b^3}{2a^3b-2b^4}$.

37. $\frac{4a^3-ab^2}{8a^4+ab^3}$.

38. $\frac{2x^2y^2-8y^4}{4x^3y-32y^4}$.

39. $\frac{a^4bc-b^5c}{3a^6b+3b^7}$.

40. $\frac{10nx+10ny}{25nx^2-25ny^2}$.

41. $\frac{x^{n+2}-x^n}{x^{n+3}-x^n}$.

42. $\frac{a^{n+4}-a^ny^4}{a^{n+3}+a^{n+1}y^2}$.

43. $\frac{x^4y+x^2y^3+y^5}{x^6-y^6}$.

44. $\frac{x^4y-x^2y^3+y^5}{x^6+y^6}$.

45. $\frac{a^2-11a+24}{a^2-a-6}$.

46. $\frac{x^3-6x^2+5x}{x^3+2x^2-35x}$.

47. $\frac{7x-2x^2-3}{2x^2+7x-4}$.

48. $\frac{a(a+2b)^4}{b(a^2-4b^2)^2}$.

49. $\frac{a^3+2a^2b+ab^2}{a^5-2a^3b^2+ab^4}$.

50. $\frac{x^2-2x^4+x^6}{x^2-x^6}$.

51. $\frac{x^3+5x^2-6x}{2x^2-2}$.

52. $\frac{x^3-7x+6}{x^4-10x^2+9}$.

53. $\frac{x^3-21x+20}{x^4-26x^2+25}$.

54. $\frac{x^3+3x^2+3x+1}{x^3+x^2-4x-4}$.

55. $\frac{a^3-3a^2b+3ab^2-b^3}{3a^2b-3ab^2}$.

56. $\frac{3a^2+4ax-4x^2}{9a^2-12ax+4x^2}$.

57. $\frac{2ax-ay-4bx+2by}{4ax-2ay-2bx+by}$.

58. $\frac{9x^3-13a^2x-4a^3}{3bx+3xy-4ab-4ay}$.

59. $\frac{m-m^2-n+mn}{m-mn+n^2-n}$.

60. $\frac{am-an-m+n}{am-an+m-n}$.

61. Reduce $\dfrac{3x^3 - 16x^2 + 25x - 12}{3x^3 - 8x^2 - 7x + 12}$ to its lowest terms.

SOLUTION

The process of finding the H. C. D. of the terms of the fraction can be shortened in some instances by finding the sum or the difference of the terms, since the result will either be the H.C.D. or some multiple of it, § 148.

$$\frac{3x^3 - 16x^2 + 25x - 12}{3x^3 - 8x^2 - 7x + 12}.$$

Subtracting the numerator from the denominator,

$$8x^2 - 32x + 24$$
$$= 8(x^2 - 4x + 3).$$

By trial, $x^2 - 4x + 3$ is found to be the H. C. D.

Dividing the terms of the fraction by $x^2 - 4x + 3$, the fraction in its lowest terms is $\dfrac{3x - 4}{3x + 4}$.

Reduce the following to their lowest terms:

62. $\dfrac{x^3 + 5x^2 - 9x - 45}{x^3 + 3x^2 - 25x - 75}$.

63. $\dfrac{x^3 + 2x^2 - 23x - 60}{x^3 - 11x^2 - 10x + 200}$.

64. $\dfrac{4x^3 + 7x^2 + 10x - 3}{4x^3 + 9x^2 + 14x + 3}$.

65. $\dfrac{x^3 + 5x^2 + 8x + 6}{x^3 + 3x^2 + 4x + 2}$.

66. $\dfrac{3x^3 - 7x^2 + 4}{5x^3 - 17x^2 + 16x - 4}$.

67. $\dfrac{5x^3 - 14x^2 + 22x + 5}{5x^3 - 18x^2 + 34x - 15}$.

68. $\dfrac{x^3 - 6x^2y + 2xy^2 + 3y^3}{x^3 + 6x^2y - 2xy^2 - 5y^3}$.

69. $\dfrac{a^2 + b^2 + 2c^2 + 2ab + 3ac + 3bc}{a^2 + b^2 + c^2 + 2ab + 2ac + 2bc}$.

70. $\dfrac{a^2+b^2+c^2+2ab-2ac-2bc}{a^2+b^2-c^2+2ab}$.

71. $\dfrac{a^2+b^2+c^2-2ab-2ac+2bc}{a^2+b^2+5c^2-2ab-6ac+6bc}$.

72. $\dfrac{4a^2+9b^2+16c^2+12ab+16ac+24bc}{4a^2-9b^2+16c^2+16ac}$.

73. $\dfrac{ab(x^2+y^2)+xy(a^2+b^2)}{ab(x^2-y^2)+xy(a^2-b^2)}$.

166. Signs in fractions.

167. The sign written before the dividing line of a fraction is called the **Sign of the Fraction.**

It belongs to the fraction as a *whole,* and not to either the numerator or the denominator.

In $-\dfrac{x}{3z}$ the sign of the fraction is $-$, while the signs of x and $3z$ are $+$.

168. An expression like $\dfrac{-a}{-b}$ indicates a process in division, in which the quotient is to be found by dividing a by b and prefixing the sign according to the law of signs in division; that is,

$$\frac{-a}{-b}=+\frac{a}{b}, \qquad \frac{+a}{+b}=+\frac{a}{b},$$

$$\frac{-a}{+b}=-\frac{a}{b}, \qquad \frac{+a}{-b}=-\frac{a}{b}.$$

By comparing the above fractions and their values the following principles may be deduced:

169. PRINCIPLES. — 1. *The signs of both the numerator and the denominator of a fraction may be changed without changing the sign of the fraction.*

2. *The sign of either the numerator or the denominator of a fraction may be changed, provided the sign of the fraction is changed.*

When either term of a fraction is a polynomial, its sign is changed by changing the sign of each of its terms. Thus, the sign of $a - b$ is changed by writing it $-a+b$, or $b-a$.

Examples

Reduce to fractions having positive numbers in both terms:

1. $\dfrac{-3}{-4}$.
2. $\dfrac{2}{-5}$.
3. $\dfrac{-a-x}{2x}$.
4. $\dfrac{-4c}{-b-y}$.
5. $-\dfrac{-a-b}{c+d}$.
6. $-\dfrac{-2}{-a-y}$.
7. $-\dfrac{-2-m}{2+n}$.
8. $\dfrac{-4(a+b)}{5(-x-y)}$.

170. Since, from the laws of signs, changing the signs of an *even* number of factors does not change the sign of the product, it follows that:

Principle 1. — *The signs of an even number of factors of the numerator or of the denominator may be changed without changing the sign of the fraction.*

Since, from the laws of signs, changing the signs of an *odd* number of factors changes the sign of the product, it follows from Prin. 2, § 169, that:

Principle 2. — *The signs of an odd number of factors of the numerator or of the denominator may be changed, provided the sign of the fraction is changed.*

Examples

1. Show that $\dfrac{-b}{b-a}=\dfrac{b}{a-b}$.
2. Show that $\dfrac{-a}{b-a+c}=\dfrac{a}{a-b-c}$.
3. Show that $\dfrac{2}{a(b-a)}=-\dfrac{2}{a(a-b)}$.
4. Show that $\dfrac{1}{(a-b)(c-b)}=-\dfrac{1}{(a-b)(b-c)}$.
5. Show that $\dfrac{m-n}{(a-c)(b-a)}=\dfrac{m-n}{(c-a)(a-b)}$.
6. Show that $\dfrac{1}{(b-a)(c-b)(a-c)}=-\dfrac{1}{(a-b)(b-c)(c-a)}$.
7. Show that $\dfrac{n-m}{(y-x)(z-y)(x-z)}=\dfrac{m-n}{(x-y)(y-z)(z-x)}$.

171. To reduce a fraction to an integral or a mixed expression.

1. How many units are there in $\frac{25}{4}$? in $\frac{32}{5}$? in $\frac{17}{3}$?

2. How many units are there in $\frac{4a+8b}{4}$? in $\frac{10a-5b}{5}$?

EXAMPLES

1. Reduce $\frac{ax+b}{x}$ to a mixed number.

PROCESS

$$\frac{ax+b}{x} = a + \frac{b}{x}$$

EXPLANATION. — Since, § 158, a fraction may be regarded as an expression of unexecuted division, by performing the division indicated the fraction is changed into the form of a mixed number.

When the degree of the numerator is lower than the degree of the denominator, the fraction cannot be reduced to an integral or mixed expression.

Reduce the following to integral or mixed expressions:

2. $\frac{a^3-3a^2+a-1}{a^2}$.

3. $\frac{4x^3-8x^2+2x-1}{2x}$.

4. $\frac{ab-bc-cd+d^2}{b}$.

5. $\frac{a^2x^2-ax^2-x-1}{ax}$.

6. $\frac{x^2-x-15}{x-4}$.

7. $\frac{x^3-2xy-y^3}{x-y}$.

8. $\frac{x^2-6xy+4y^2}{2xy}$.

9. $\frac{a^2-2a-26}{a+5}$.

10. $\frac{a^3+2ab+b^3}{a+b}$.

11. $\frac{x^3+y^3}{x^2-xy+y^2}$.

12. $\frac{x^3+5x^2+3x-6}{x+2}$.

13. $\frac{a^3+9a^2+24a+22}{a+3}$.

14. $\frac{x^3-6x^2+14x-9}{x-2}$.

15. $\frac{x^4-3x^2+5x-1}{x-3}$.

16. $\frac{a^4+3a^2b^2+b^4}{a^2+b^2}$.

17. $\frac{4x^2+22x+21}{2x+4}$.

18. $\frac{x^3-3x^2+4x-3}{x-4}$.

19. $\frac{a^2+2ab+b^2+c^2}{a+b+c}$.

20. $\frac{a^3-6a^2b+12ab^2-10b^3}{a-2b}$.

21. $\frac{x^4+4x^3y+6x^2y^2+4xy^3}{x+y}$.

172. To reduce an integral or a mixed expression to a fraction.

1. How many fifths are there in 6? in 10? in a? in $3b$?

2. How many fifths are there in $6\frac{4}{5}$? in $a + \frac{4a}{5}$? in $2a + \frac{a}{5}$?

EXAMPLES

1. Reduce $a + \frac{b}{c}$ to a fractional form.

PROCESS		EXPLANATION. — Since $1 = c \div c$, $a = ac \div c$. Since, § 158,
$a = \frac{ac}{c}$		$\frac{b}{c}$ means $b \div c$, $a + \frac{b}{c} = ac \div c + b \div c$.
$a + \frac{b}{c} = \frac{ac}{c} + \frac{b}{c} = \frac{ac + b}{c}$	§ 104, 3,	$= (ac + b) \div c$.
	§ 158,	$= \frac{ac + b}{c}$.

RULE. — *Multiply the integral part by the denominator of the fraction; to this product add the numerator when the sign of the fraction is plus, subtract it when the sign of the fraction is minus, and write the result over the denominator.*

If the *sign of the fraction* is $-$, the signs of *all* the terms in the numerator must be changed when it is subtracted.

Reduce the following to fractional forms:

2. $a + \frac{b}{2}$.

3. $x - \frac{y}{2}$.

4. $5c + \frac{a^2 - c^2}{c}$.

5. $3b - \frac{a + 2b^2}{b}$.

6. $4x + \frac{1 - x}{3}$.

7. $4b + \frac{2bc - 1}{c}$.

8. $a - \frac{a^2 - ab}{b}$.

9. $a - \frac{a - b - c}{2}$.

10. $b - \frac{b - a - c}{2}$.

11. $a - \frac{c - a - b}{2}$.

12. $\frac{a + b + c}{2} - c$.

13. $6 + \frac{a^2 + ab}{ab - b^2}$.

14. $a + x - \dfrac{x^2}{a - x}$.

15. $x + 5 - \dfrac{x^2 + 4}{x - 4}$.

16. $a^2 - ab + b^2 - \dfrac{b^3}{a + b}$.

17. $x^2 + xy + y^2 + \dfrac{y^3}{x - y}$.

18. $3a - 6b - \dfrac{16b^2 - 5c^2}{a + 2b}$.

19. $x - x^2 - x^3 - \dfrac{x^4}{1 + x}$.

173. To reduce dissimilar fractions to similar fractions.

1. Into what fractions having the same denominator may $\frac{2}{3}$, $\frac{3}{4}$, and $\frac{5}{6}$ be changed?

2. Express $\dfrac{1}{3x}$, $\dfrac{2}{5x}$, and $\dfrac{4}{15x}$ by fractions whose common denominator is the lowest common multiple of the given denominators.

174. Fractions that have the same denominator are called **Similar Fractions.**

175. Fractions that have different denominators are called **Dissimilar Fractions.**

176. PRINCIPLE. — *The lowest common denominator of two or more fractions is the lowest common multiple of their denominators.*

The abbreviation L.C.D. is used instead of *Lowest Common Denominator.*

EXAMPLES

1. Reduce $\dfrac{a}{3bc}$ and $\dfrac{c}{6ab}$ to similar fractions having their lowest common denominator.

PROCESS

$$\frac{a}{3bc} = \frac{a \times 2a}{3bc \times 2a} = \frac{2a^2}{6abc}$$

$$\frac{c}{6ab} = \frac{c \times c}{6ab \times c} = \frac{c^2}{6abc}$$

EXPLANATION. — Since the L. C. D. of the given fractions is the lowest common multiple of their denominators (Prin.), the lowest common multiple of their denominators must be found. This is $6abc$.

To reduce the fractions to equivalent fractions having the common denominator $6abc$, § 165, the terms of each fraction must be multiplied by the quotient of $6abc$ divided by the denominator of the fraction.

RULE. — *Find the lowest common multiple of the denominators of the fractions for the lowest common denominator.*

Divide this denominator by the denominator of the first fraction, and multiply the terms of the fraction by the quotient.

Proceed in a similar manner with the other fractions.

All mixed expressions should first be reduced to the fractional form, and all fractions to their lowest terms.

Reduce to similar fractions having their L. C. D.:

2. $\frac{x}{2}$ and $\frac{3y}{5}$.

3. $\frac{ab}{4}$ and $\frac{x}{y}$.

4. $\frac{a}{3}$ and $\frac{4x}{6y}$.

5. $\frac{2a}{5b}$ and $\frac{3x}{4a}$.

6. $\frac{a^2b}{c^2d}$ and $\frac{ab^2}{cd^2}$.

7. $\frac{1}{2xy}$ and $\frac{3}{4ay}$.

8. $\frac{m-n}{a}$, 2, $\frac{a}{m+n}$.

9. $\frac{4bc}{3a^2b}$, $\frac{3ac}{4b^2c}$, $\frac{7ab}{6ac^2}$.

10. $\frac{3ab}{8a^2c}$, $\frac{7a^2}{4b^2c}$, $\frac{5}{a^3bc^2}$.

11. $\frac{3}{x^2y^4}$, $\frac{-6}{x^3y^3}$, $\frac{3}{x^4y^2}$.

12. $\frac{x+y}{2}$, $\frac{2x-y}{4}$, $\frac{x^2-y^2}{6}$.

13. $\frac{a-2b}{x}$, $\frac{2b-a}{y}$, $a-\frac{c}{3x}$.

14. $\frac{x^2}{x^2-1}$, $\frac{x}{x+1}$, $\frac{x}{x-1}$.

15. $\frac{a^3}{a^4-16}$, $\frac{a}{a^2+4}$, $\frac{2a}{a^2-4}$.

16. $\frac{4a}{a-b}$, $\frac{3b}{b+a}$, $\frac{1}{a^2-b^2}$.

17. $\frac{a}{1-ax}$, $\frac{x}{1+ax}$, $\frac{-ax}{ax+1}$.

18. $\frac{1}{x^2+7x+10}$, $\frac{1}{x^2+x-2}$, $\frac{1}{x^2+4x-5}$.

19. $\frac{a+5}{a^2-4a+3}$, $\frac{a-2}{a^2-8a+15}$, $\frac{a+1}{a^2-6a+5}$

ADDITION AND SUBTRACTION OF FRACTIONS

177. 1. Find the value of $\frac{4}{x}+\frac{3}{x}$; $\frac{7}{a}-\frac{2}{a}$; $\frac{a}{y}+\frac{b}{y}$; $\frac{1}{x}+\frac{2}{y}$.

2. What kind of fractions can be added or subtracted without changing their form?

3. What must be done to dissimilar fractions before they can be added or subtracted? How are dissimilar fractions made similar?

178. PRINCIPLE. — *Only similar fractions may be united by addition or subtraction into one term.*

EXAMPLES

1. Find the algebraic sum of $\frac{a}{b}+\frac{c}{b}-\frac{d}{b}$.

PROCESS

§ 104, 3, $$\frac{a}{b}+\frac{c}{b}-\frac{d}{b}=\frac{a+c-d}{b}$$

2. What is the sum of $\frac{3x}{4}$, $\frac{7x}{10}$, and $\frac{5y}{12}$?

PROCESS

$$\frac{3x}{4}+\frac{7x}{10}+\frac{5y}{12}$$
$$=\frac{45x}{60}+\frac{42x}{60}+\frac{25y}{60}$$
$$=\frac{87x+25y}{60}$$

EXPLANATION. — Since the fractions are dissimilar, they must be made similar before they can be united into one term (Prin.).

The lowest common denominator is 60. $\frac{3x}{4}=\frac{45x}{60}$; $\frac{7x}{10}=\frac{42x}{60}$; $\frac{5y}{12}=\frac{25y}{60}$.

Therefore, the sum is $\frac{45x}{60}+\frac{42x}{60}+\frac{25y}{60}=\frac{45x+42x+25y}{60}=\frac{87x+25y}{60}$.

3. Find the algebraic sum of $\frac{5x-1}{8}-\frac{3x-2}{7}+\frac{x-5}{4}$.

PROCESS

$$\frac{5x-1}{8}-\frac{3x-2}{7}+\frac{x-5}{4}=\frac{35x-7}{56}-\frac{(24x-16)}{56}+\frac{14x-70}{56}$$

$$=\frac{35x-7-(24x-16)+14x-70}{56}$$

$$=\frac{35x-7-24x+16+14x-70}{56}$$

$$=\frac{25x-61}{56}$$

SUGGESTION. — When a fraction is preceded by the sign $-$, it is expedient for the beginner to inclose the numerator in parenthesis, if it is a polynomial, as is shown above.

RULE. — *Reduce the fractions to similar fractions having their lowest common denominator.*

Change the signs of all the terms of the numerators of fractions preceded by the sign $-$, then find the algebraic sum of the numerators, and write it over the common denominator.

1. Reduce the resulting fraction to its lowest terms, if necessary.
2. The integral and fractional parts of mixed expressions may be united separately.
3. An integer may be expressed as a fraction whose denominator is 1.

Find the algebraic sum of

4. $\frac{a-b}{ab}+\frac{b-c}{bc}$.

5. $\frac{a+b}{a-b}+\frac{a-b}{a+b}$.

6. $\frac{ax}{a-x}+a$.

7. $a+b+\frac{a^2+b^2}{a-b}$.

8. $\frac{x+1}{x^2+x+1}+\frac{1}{x-1}$.

9. $\frac{b-c}{bc}-\frac{a-c}{ac}$.

10. $\frac{a+b}{a-b}-\frac{a-b}{a+b}$.

11. $\frac{5a^2+b^2}{a^2-b^2}-2$.

12. $x+y-\frac{x^2+y^2}{x-y}$.

13. $\frac{x}{x-2}-\frac{x-2}{x+2}$.

Simplify:

14. $\frac{2x+1}{3}+\frac{x-2}{4}-\frac{x-3}{6}+\frac{5-x}{2}$.

15. $\frac{x-2}{6}-\frac{x-4}{9}+\frac{2-3x}{4}-\frac{2x+1}{12}$.

16. $\frac{x-1}{3}-\frac{x-2}{18}-\frac{4x-3}{27}+\frac{1-x}{6}$.

17. $\frac{2-6x}{5}+\frac{4x-1}{2}-\frac{5x-3}{6}-\frac{1-x}{3}$.

18. $\frac{x+3}{4}-\frac{x-2}{5}+\frac{x-4}{10}-\frac{x+3}{6}$.

19. $\frac{x-4}{3}-\frac{x-6}{8}+2-\frac{x+8}{6}$.

20. $\frac{2-3x}{3}-\frac{3-2x}{4}+x-\frac{1-4x}{5}$.

21. $\frac{1-2a}{5}+\frac{2a-1}{4}-\frac{2a-a^2+1}{8}$.

22. $\frac{3+x-x^2}{4}-\frac{1-x+x^2}{6}-\frac{1-2x-2x^2}{3}$.

23. $\frac{3a}{5}+\frac{b}{2}-3+\frac{1}{b}$.

24. $\frac{a-b}{a+b}-\frac{a+b}{a-b}+\frac{6ab}{a^2-b^2}$.

25. $\frac{a+x}{a-x}+\frac{a-x}{a+x}+\frac{2ax}{a^2-x^2}$.

26. $x+1+\frac{x^3-3}{x-1}$.

27. $1-\frac{ax-bx+ab}{x^2}$.

28. $\frac{a+1}{a^2+a+1}+\frac{a-1}{a^2-a+1}$.

29. $3x+\frac{5}{ax}-\left(2x+\frac{3}{ax}\right)$.

30. $\frac{a-b}{2(a+b)}+\frac{a^2+b^2}{a^2-b^2}-\frac{a}{a-b}$.

31. $\frac{a+1}{a^2-9}-\frac{6}{a+5}+\frac{10}{a+3}$.

32. $2a-3b-\frac{4a^2+9b^2}{2a+3b}$.

33. $3a-2x-\frac{8a^2-4x}{3a+2x}$.

34. $m-\frac{m^2+n^2}{m-n}+n$.

35. $\frac{1}{2(x-1)}-\frac{1}{2(x+1)}+\frac{1}{x^2}$.

36. $\frac{1}{x}+1+\frac{2x}{1+x}-2$.

37. $\dfrac{a}{a-2}-\dfrac{a-2}{a+2}+\dfrac{3}{4-a^2}$.

SUGGESTION. — By Prin. 1, § 169, $\dfrac{3}{4-a^2}=\dfrac{-3}{a^2-4}$

38. $\dfrac{a+1}{a-1}+\dfrac{a-1}{a+1}+\dfrac{2a^2}{1-a^2}$.

39. $\dfrac{5x+2}{x^2-4}+\dfrac{2}{x-2}-\dfrac{3}{2-x}$.

40. $\dfrac{x(a+x)}{a-x}-\dfrac{3ax-x^2}{x-a}+4a$.

41. $\dfrac{a+b}{a-b}-\dfrac{a^2+b^2}{b^2-a^2}+\dfrac{b-a}{a+b}$.

42. $\dfrac{a}{x(x-a)}+\dfrac{2x}{a(a-x)}+\dfrac{1}{x-a}$.

43. $\dfrac{1}{a^3+8}-\dfrac{1}{8-a^3}+\dfrac{1}{4-a^2}$.

44. $\dfrac{x-1}{x^2-5x+6}+\dfrac{x}{x-2}-\dfrac{3}{x+1}$.

45. $\dfrac{2}{x}+\dfrac{3}{1-2x}-\dfrac{2x-3}{4x^2-1}+\dfrac{1}{1+2x}$.

46. $\dfrac{x^2+a^2}{x^3-a^3}+\dfrac{x+a}{x^2+ax+a^2}-\dfrac{2}{x-a}$.

47. $\dfrac{3m}{(m-2x)^2}+\dfrac{m+2x}{(m+x)(m-2x)}-\dfrac{5}{m+x}$.

48. $\dfrac{3}{y^2-my-12m^2}-\dfrac{2}{y^2-5my+4m^2}$.

49. $\dfrac{ab}{a^2-ab+b^2}-\dfrac{ab}{a^2+ab+b^2}-1$.

50. $\dfrac{1}{x^2-3x+2}-\dfrac{1}{x^2+2x-3}+\dfrac{1}{x^2+x-6}$.

51. $\dfrac{2}{x^2+5x+6}-\dfrac{1}{x^2+6x+8}-\dfrac{1}{x^2+7x+12}$.

52. $\dfrac{5(x-3)}{x^2-x-2}-\dfrac{2(x+2)}{x^2+4x+3}-\dfrac{x-1}{6-x-x^2}$.

53. $\dfrac{a-b-c}{a+b+c}-\dfrac{a-b+c}{a+b-c}+\dfrac{4ac}{(a+b)^2-c^2}$.

54. Simplify $\dfrac{a^2+2a+1}{a^2-2a+1}-2+\dfrac{a^2-2a+1}{a^2+2a+1}$.

SOLUTION

$$\frac{a^2+2a+1}{a^2-2a+1}-2+\frac{a^2-2a+1}{a^2+2a+1}=\left(1+\frac{4a}{a^2-2a+1}\right)-2+\left(1-\frac{4a}{a^2+2a+1}\right)$$

$$=\frac{4a}{a^2-2a+1}-\frac{4a}{a^2+2a+1}=\frac{16a^2}{(a-1)^2(a+1)^2}.$$

SUGGESTION. — Frequently, by reducing one or more of the given fractions to mixed numbers, the integers cancel each other and the numerators are thus simplified.

Simplify:

55. $\dfrac{a^2+2ab+b^2}{a^2+b^2}-1+\dfrac{2ab}{a^2-b^2}$.

56. $\dfrac{a^2+3ab+2b^2}{a^2+3ab-4b^2}-\dfrac{a^2-13b^2}{a^2-16b^2}$.

57. $\dfrac{x^2+x+1}{x^2-x+1}-\dfrac{x^2-x+1}{x^2-2x+1}$.

58. $\dfrac{x^3+x^2+x+1}{x^3-x^2+x-1}-1-\dfrac{3}{x-1}$.

59. $\dfrac{x+1}{x-1}+\dfrac{x-1}{x+1}-\dfrac{x+2}{x-2}-\dfrac{x-2}{x+2}$.

60. $\dfrac{x+3}{x-3}-\dfrac{x-3}{x+3}+\dfrac{x+4}{x-4}-\dfrac{x-4}{x+4}$.

61. $\dfrac{a}{a-b}-\dfrac{a}{a+b}-\dfrac{2ab}{a^2+b^2}-\dfrac{4ab^3}{a^4+b^4}$.

SOLUTION

Combining first two fractions, $\dfrac{a}{a-b}-\dfrac{a}{a+b}=\dfrac{2ab}{a^2-b^2}$. (1)

Combining (1) with the third fraction, $\dfrac{2ab}{a^2-b^2}-\dfrac{2ab}{a^2+b^2}=\dfrac{4ab^3}{a^4-b^4}$. (2)

Combining (2) with the fourth fraction, $\dfrac{4ab^3}{a^4-b^4}-\dfrac{4ab^3}{a^4+b^4}=\dfrac{8ab^7}{a^8-b^8}$. (3)

Hence, $\dfrac{a}{a-b}-\dfrac{a}{a+b}-\dfrac{2ab}{a^2+b^2}-\dfrac{4ab^3}{a^4+b^4}=\dfrac{8ab^7}{a^8-b^8}$.

62. $\dfrac{a+b}{a-b}-\dfrac{a-b}{a+b}-\dfrac{4ab}{a^2+b^2}+\dfrac{8ab^3}{a^4+b^4}$.

63. $\dfrac{1}{a-b}-\dfrac{1}{a+b}-\dfrac{2b}{a^2+b^2}+\dfrac{2b^3}{a^4+b^4}$.

64. $\dfrac{1}{x-1}+\dfrac{1}{x+1}-\dfrac{x}{x^2+1}-\dfrac{x^3+3x}{x^4+1}$.

65. $\dfrac{a+x}{a-x}+\dfrac{a^2+x^2}{a^2-x^2}-\dfrac{a-x}{a+x}-\dfrac{a^2-x^2}{a^2+x^2}-\dfrac{4a^3x+4ax^3}{a^4-x^4}$.

66. Simplify $\dfrac{a}{(b-c)(c-a)}-\dfrac{b}{(a-c)(a-b)}+\dfrac{c}{(b-a)(c-b)}$.

SOLUTION

$$\frac{a}{(b-c)(c-a)}-\frac{b}{(a-c)(a-b)}+\frac{c}{(b-a)(c-b)}$$

§ 170, $$=\frac{a}{(b-c)(c-a)}+\frac{b}{(c-a)(a-b)}+\frac{c}{(a-b)(b-c)}$$

$$=\frac{a(a-b)+b(b-c)+c(c-a)}{(b-c)(c-a)(a-b)}.$$

Simplify:

67. $\dfrac{1}{(b-c)(a-c)}+\dfrac{1}{(c-a)(a-b)}+\dfrac{1}{(b-a)(b-c)}$.

68. $\dfrac{a+1}{(a-b)(a-c)}+\dfrac{b+1}{(b-c)(b-a)}+\dfrac{c+1}{(a-c)(b-c)}$.

69. $\dfrac{c^2ab}{(c-a)(b-c)}-\dfrac{b^2ca}{(b-a)(b-c)}-\dfrac{a^2bc}{(a-b)(a-c)}$.

70. $\dfrac{b-c}{(b-a)(a-c)}-\dfrac{c-a}{(b-c)(a-b)}-\dfrac{a+b}{(a-c)(b-c)}$.

71. $\dfrac{c+a}{(a-b)(b-c)}-\dfrac{b+c}{(c-a)(b-a)}+\dfrac{a+b}{(c-b)(a-c)}$.

72. $\dfrac{c+a}{(a+b)(b-c)}-\dfrac{c-b}{(c-a)(a+b)}-\dfrac{a-b}{(b-c)(a-c)}$.

73. $\dfrac{c+a-b}{(a-b)(b-c)}+\dfrac{b+c-a}{(c-a)(a-b)}-\dfrac{a+b+c}{(b-c)(a-c)}$.

MULTIPLICATION OF FRACTIONS

179. 1. How much is 5 times $\frac{2}{3}$? $2 \times \frac{2}{7}$? $6 \times \frac{4a}{5}$? $3 \times \frac{2x}{7}$? $4 \times \frac{2m}{5}$? $3 \times \frac{3b}{4}$? $c \times \frac{a}{4}$? $a \times \frac{2b}{d}$?

2. Express $5 \times \frac{3}{10}$ in its lowest terms; $3 \times \frac{4}{9}$; $4 \times \frac{5a}{12}$; $2 \times \frac{7b}{6}$; $11 \times \frac{3x}{22}$; $7 \times \frac{a}{14}$; $10 \times \frac{5a}{20}$; $8 \times \frac{7ax}{16}$.

3. In what two ways, then, may a fraction be multiplied by an integer?

4. How much is $\frac{1}{5}$ of $\frac{10}{3}$, or $\frac{10}{3} \div 5$? $\frac{1}{4}$ of $\frac{8a}{9}$, or $\frac{8a}{9} \div 4$?

5. How much is $\frac{1}{5}$ of $\frac{7}{3}$, or $\frac{7}{3} \div 5$? $\frac{1}{4}$ of $\frac{5x}{9}$, or $\frac{5x}{9} \div 4$?

6. In what two ways, then, may a fraction be divided by an integer?

180. PRINCIPLES. — 1. *Multiplying the numerator or dividing the denominator of a fraction by any number multiplies the fraction by that number.*

2. *Dividing the numerator or multiplying the denominator of a fraction by any number divides the fraction by that number.*

EXAMPLES

1. Multiply $\frac{a}{b}$ by $\frac{c}{d}$.

PROCESS

$$\frac{a}{b} \times \frac{c}{d} = \frac{ac}{bd}$$

EXPLANATION. — To multiply $\frac{a}{b}$ by $\frac{c}{d}$ is to find c times the $\frac{1}{d}$ part of $\frac{a}{b}$. $\frac{1}{d}$ part of $\frac{a}{b} = \frac{a}{bd}$ (Prin. 2), and c times $\frac{a}{bd} = \frac{ac}{bd}$ (Prin. 1). Therefore, $\frac{a}{b} \times \frac{c}{d} = \frac{ac}{bd}$.

OR

To find the product of $\frac{a}{b} \times \frac{c}{d}$.

Let $$x = \frac{a}{b} \times \frac{c}{d}. \qquad (1)$$

Multiplying each member of the equation by $b \times d$, Ax. 4,

$$x \times b \times d = \frac{a}{b} \times \frac{c}{d} \times b \times d$$

§ 104, 1, $$= \frac{a}{b} \times b \times \frac{c}{d} \times d = ac.$$

$$xbd = ac.$$

Dividing by bd, Ax. 5, $$x = \frac{ac}{bd}. \qquad (2)$$

∴ Eq. (1) and (2), Ax. 1, $$\frac{a}{b} \times \frac{c}{d} = \frac{ac}{bd}.$$

Similarly, $$\frac{a}{b} \times \frac{c}{d} \times \frac{e}{f} = \frac{ace}{bdf};$$

and so on for any number of fractions.

RULE. — *Multiply the numerators together for the numerator of the product, and the denominators for the denominator of the product.*

1. Cancel equal factors from the numerator and denominator.

2. Reduce integral and mixed expressions to the fractional form before multiplying.

2. Simplify $\dfrac{3x^2 + 15x}{x + 3} \times \dfrac{x^2 - 9}{x + 5} \times \dfrac{1}{2x^2 - 10x}$.

SOLUTION. $$\frac{3x^2 + 15x}{x + 3} \times \frac{x^2 - 9}{x + 5} \times \frac{1}{2x^2 - 10x}$$

$$= \frac{3x(x + 5)}{x + 3} \times \frac{(x + 3)(x - 3)}{x + 5} \times \frac{1}{2x(x - 5)}$$

Canceling, $$= \frac{3(x - 3)}{2(x - 5)}.$$

Multiply:

3. $\dfrac{3ab}{4xy}$ by $\dfrac{2y}{3a^2}$.

4. $\dfrac{5xy}{2ac}$ by $\dfrac{3ax}{10y^2}$.

5. $\dfrac{4ab}{10c^2}$ by $\dfrac{3bc}{a^3}$.

6. $\dfrac{4mn}{3xy}$ by $-\dfrac{15bx}{16m^2}$.

7. $\dfrac{2ax}{12by}$ by $-\dfrac{10b^2}{x^2}$.

8. $\dfrac{a^m b^n}{4x}$ by $\dfrac{6x^2}{a^{m-1}b^{2n}}$.

9. $\frac{a^{m+1}}{b^{m+2}}$ by $\frac{b^{m+1}}{a^m}$.

10. $\frac{a}{a+b}$ by $\frac{b}{a-b}$.

11. $\frac{xy^2}{20-8x}$ by $\frac{25-10x}{x^2y}$.

12. $\frac{1-5x+6x^2}{2-3x+x^2}$ by $\frac{2-x}{1-x}$.

Simplify the following:

13. $\frac{(a-b)^2}{a+b} \times \frac{b}{a^2-ab} \times \frac{(a+b)^2}{a^2-b^2}$.

14. $\frac{a^4-x^4}{a^3+x^3} \times \frac{a+x}{a^2-x^2} \times \frac{a^2-ax+x^2}{(a+x)^2}$.

15. $\frac{4a-b}{2x+y} \times \frac{2a}{4a^2-ab} \times \frac{4x^2-y^2}{4}$.

16. $\frac{p+2}{x-3} \times \frac{3x^2-27}{2p^2-8} \times \frac{4}{px+3p}$.

17. $\frac{p^4-q^4}{(p-q)^2} \times \frac{p-q}{p^2+pq} \times \frac{p^2}{p^2+q^2}$.

18. $\frac{a^3+8}{a^3-8} \times \frac{a^2+2a+4}{a^2-2a+4}$.

19. $\frac{a^4+a^2x^2+x^4}{a^4-ax^3} \times \frac{x}{a^2-ax+x^2}$.

20. $\frac{a^4+4}{a^4+a^2+1} \times \frac{a^2+a+1}{a^2+2a+2}$.

21. $\frac{x^2+5x+6}{x^2+6x+5} \times \frac{x^2+7x+10}{x^2+7x+12}$.

22. $\frac{x^2+3x-10}{x^2-4x-21} \times \frac{x^2-10x+21}{x^2+7x+10}$.

23. $\frac{a^2+ab+ac+bc}{ax-ay-x^2+xy} \times \frac{a^2-ax+ay-xy}{a^2+ac+ax+cx} \times \frac{x^2-x(y-a)-ay}{a^2-a(y-b)-by}$.

24. $\frac{x^3-5x^2+8x-4}{x^3-8x^2+19x-12} \times \frac{x^3-10x^2+33x-36}{x^3-6x^2+11x-6}$.

25. $\frac{x^4-3x^3-23x^2+75x-50}{x^4-5x^3-21x^2+125x-100} \times \frac{x^3-10x^2+29x-20}{x^3-12x^2+45x-50}$.

DIVISION OF FRACTIONS

181. 1. How many times is $\frac{1}{4}$ contained in 1? $\frac{1}{5}$ in 1? $\frac{1}{6}$ in 1?

2. If the numerator of a fraction is 1, how does the number of times the fraction is contained in 1 compare with the denominator?

3. How many times is $\frac{1}{d}$ contained in 1? $\frac{1}{x+y}$ in 1?

4. How many times is $\frac{2}{5}$ contained in 1? $\frac{2}{d}$ in 1? $\frac{c}{d}$ in 1?

182. The reciprocal of a fraction is the fraction inverted.

For, since $\frac{b}{a}$ multiplied by $\frac{a}{b}$ produces 1, § 102, if 1 is the dividend and $\frac{a}{b}$ the divisor, $\frac{b}{a}$ is the quotient.

Examples

1. Divide $\frac{a}{b}$ by $\frac{c}{d}$.

PROCESS

$$\frac{a}{b} \div \frac{c}{d} = \frac{a}{b} \times \frac{d}{c} = \frac{ad}{bc}$$

Explanation.—The fraction $\frac{1}{d}$ is contained in 1, d times; and $\frac{c}{d}$ is, therefore, contained in 1, $\frac{1}{c}$ part of d times, or $\frac{d}{c}$ times.

Since $\frac{c}{d}$ is contained $\frac{d}{c}$ times in 1, it will be contained $\frac{a}{b}$ times $\frac{d}{c}$, or $\frac{ad}{bc}$ times in $\frac{a}{b}$.

OR

To find the quotient of $\frac{a}{b} \div \frac{c}{d}$.

Let $$x = \frac{a}{b} \div \frac{c}{d}. \qquad (1)$$

§ 102, $$x \times \frac{c}{d} = \frac{a}{b}.$$

Multiplying each member of this equation by $\frac{d}{c}$,

$$x \times \frac{c}{d} \times \frac{d}{c} = \frac{a}{b} \times \frac{d}{c}.$$

That is, $$x = \frac{a}{b} \times \frac{d}{c}. \qquad (2)$$

Hence, eq. (1) and (2), Ax. 1, $\frac{a}{b} \div \frac{c}{d} = \frac{a}{b} \times \frac{d}{c}$.

RULE. — *Multiply the dividend by the reciprocal of the divisor.*

1. Change integral and mixed expressions to the fractional form.
2. An integer may be expressed as a fraction by writing 1 for its denominator.
3. When possible, use cancellation.

Divide:

2. 1 by $\frac{ab}{x}$.
3. 1 by $\frac{x^3}{x^2}$.
4. 1 by $\frac{a-b}{a+b}$.
5. 1 by $\frac{a-3}{a+3}$.

Write the reciprocal of

6. $\frac{a}{b}$.
7. $\frac{3m}{p}$.
8. $\frac{m}{n}$.
9. $\frac{1}{3m}$.
10. $\frac{a-x}{b-y}$.
11. $\frac{4}{ab}$.

Simplify:

12. $\frac{5mn}{6bx} \div \frac{10m^2n}{3ax^2}$.
13. $\frac{12a^4b}{25ac} \div \frac{4ax}{24c^2}$.
14. $\frac{3abm}{7} \div abx$.
15. $\frac{5ab}{3a^2c^2} \div \frac{25b^2}{15a^2}$.
16. $\frac{7x^3}{4y^3} \div \frac{21x^2y^2}{14a}$.
17. $\frac{my-y^2}{(m+y)^2} \div \frac{y^2}{m^2-y^2}$.
18. $\frac{(a-b)^2}{a+b} \div \frac{a^2-ab}{b}$.
19. $(4a+2) \div \frac{2a+1}{5a}$.
20. $\frac{x^2-y^2}{x+2y} \div (x^2-3xy+2y^2)$.
21. $\frac{x^2+x-2}{x^2-5x+4} \div \frac{x^2-x-6}{x^2+x-20}$.
22. $\frac{a^4-b^4}{a^2-2ab+b^2} \div \frac{a^2+b^2}{a^2-ab}$.
23. $\frac{x^3+y^3}{x^2-y^2} \div \frac{x^2+xy+y^2}{x-y}$.
24. $\frac{a^3+b^3}{a^2-4b^2} \div \frac{a^2-ab+b^2}{a-2b}$.
25. $\frac{m^3-y^3}{m^2y^2-y^4} \div \frac{m^3+m^2y+my^2}{my^2+y^3}$.
26. $\frac{m^4x+m^5}{m^3x-mx^3} \div \frac{m^3x^2-mx^4}{m^3x^3+x^6}$.
27. $\left(x \div \frac{1}{y}\right) \div \left(y^2 \div \frac{1}{x^2}\right)$.
28. $\left(\frac{a^3}{b} \div b^2\right) \div \left(\frac{a^2}{b^2} \times ab\right)$.
29. $(a+c) \div \left(\frac{a^2-c^2}{1+x} \div \frac{a-c}{1-x^2}\right)$.

30. $\dfrac{x^3-6x^2+11x-6}{x^3+2x^2-19x-20} \div \dfrac{x^3-13x+12}{x^3+10x^2+29x+20}$.

31. $\dfrac{x^3-15x^2+74x-120}{x^3-5x^2-x+5} \div \dfrac{x^3-9x^2+26x-24}{x^3-6x^2+11x-6}$.

32. $\dfrac{a^2+b^2-c^2+2ab}{a^2-b^2-c^2+2bc} \div \dfrac{a^2-b^2+c^2-2ac}{a^2-b^2+c^2+2ac}$.

33. $\dfrac{a^2+x^2-y^2+2ax}{a^2-x^2+y^2-2ay} \div \dfrac{a^2-x^2+y^2+2ay}{a^2-x^2-y^2-2xy}$.

34. Simplify $\left(y-x+\dfrac{x^2}{y}\right) \div \left(\dfrac{x}{y^2}+\dfrac{y}{x^2}\right)$.

SOLUTION

$$\left(y-x+\frac{x^2}{y}\right) \div \left(\frac{x}{y^2}+\frac{y}{x^2}\right)$$

$$= \frac{y^2-xy+x^2}{y} \div \frac{x^3+y^3}{x^2y^2}$$

$$= \frac{x^2-xy+y^2}{y} \times \frac{x^2y^2}{(x+y)(x^2-xy+y^2)}$$

$$= \frac{x^2y}{x+y}.$$

Simplify:

35. $\left(x-4+\dfrac{9}{x+2}\right) \div \left(1-\dfrac{4x-7}{x^2-4}\right)$.

36. $\left(x+\dfrac{3x+6}{x^2-1}+2\right) \div \left(x+3+\dfrac{1}{x+1}\right)$.

37. $\left(x^3-\dfrac{1}{x^3}\right) \div \left(x-\dfrac{1}{x}\right)$.

38. $\left(1+\dfrac{1}{y^2}+\dfrac{1}{y^4}\right) \div \left(1+\dfrac{1}{y}+\dfrac{1}{y^2}\right)$.

39. $\left(1-\dfrac{y^2}{x^2}\right) \div \left(1-\dfrac{2x}{y}+\dfrac{x^2}{y^2}\right)$.

40. $\left(1-\dfrac{2y^3}{x^3+y^3}\right) \div \left(1-\dfrac{2y}{x+y}\right)$.

COMPLEX FRACTIONS

183. A fraction one or both of whose terms contains a fraction is called a **Complex Fraction.**

It is simply an expression of unexecuted division.

EXAMPLES

1. Simplify the expression $\dfrac{\dfrac{a}{b}}{\dfrac{x}{y}}$.

PROCESS

$$\frac{\frac{a}{b}}{\frac{x}{y}} = \frac{a}{b} \div \frac{x}{y} = \frac{a}{b} \times \frac{y}{x} = \frac{ay}{bx}$$

Simplify the following expressions:

2. $\dfrac{\dfrac{x+y}{ab}}{\dfrac{x^2-y^2}{ab^2}}$.

3. $\dfrac{a+\dfrac{b}{c}}{b+\dfrac{c}{a}}$.

4. $\dfrac{m-\dfrac{3m}{x}}{x-\dfrac{x}{m}}$.

5. $\dfrac{2+\dfrac{3a}{4b}}{a+\dfrac{8b}{3}}$.

6. $\dfrac{1-\dfrac{y^2}{x^2}}{1+\dfrac{y^2}{x^2}}$.

7. $\dfrac{x-\dfrac{1}{x}}{1+\dfrac{1}{x}}$.

8. $\dfrac{b-\dfrac{c}{2}}{\dfrac{b}{2}-c}$.

9. $\dfrac{ax-\dfrac{x^2}{2}}{\dfrac{a^2}{2}-ax}$.

10. $\dfrac{\dfrac{x+y}{y}-\dfrac{x+y}{x}}{\dfrac{1}{y}-\dfrac{1}{x}}$.

11. Simplify the expression $\dfrac{\dfrac{x^2}{y^2}-\dfrac{x}{y}+1}{\dfrac{x^2}{y^2}+\dfrac{x}{y}+1}$.

SOLUTION. — Multiplying the numerator and denominator of the fraction by y^2, the L. C. D. of the fractional parts of the numerator and denominator, the expression becomes $\dfrac{x^2-xy+y^2}{x^2+xy+y^2}$.

Simplify the following:

12. $\dfrac{\dfrac{x^2-1}{x}}{\dfrac{x+1}{x^2}}$.

14. $\dfrac{\dfrac{x^3+y^3}{xy}}{\dfrac{x^2-xy+y^2}{xy}}$.

16. $\dfrac{\dfrac{x^2+y^2}{2y}-x}{\dfrac{x}{y}-\dfrac{y}{x}}$.

13. $\dfrac{\dfrac{1}{x}+\dfrac{1}{y+z}}{\dfrac{1}{x}-\dfrac{1}{y+z}}$.

15. $\dfrac{\dfrac{1}{a+1}}{1-\dfrac{1}{a+1}}$.

17. $\dfrac{\dfrac{1}{1-a}}{\dfrac{a}{1+a}}$.

18. $\dfrac{x-2+\dfrac{1}{x+2}}{x+2+\dfrac{1}{x-2}}$.

20. $\dfrac{6a-1-\dfrac{1}{a}}{\dfrac{2a-1}{3a}}$.

19. $\dfrac{\dfrac{1}{x}+\dfrac{4}{x^2}+\dfrac{4}{x^3}}{1+\dfrac{5}{x}+\dfrac{6}{x^2}}$.

21. $\dfrac{\dfrac{x-5}{2}-7+\dfrac{24}{x}}{\dfrac{3x-9}{x}}$.

22. $\dfrac{\dfrac{1}{x+1}}{1-\dfrac{1}{1+x}}+\dfrac{\dfrac{1}{x+1}}{\dfrac{x}{1-x}}+\dfrac{\dfrac{1}{1-x}}{\dfrac{x}{1+x}}$.

23. $\dfrac{3xyz}{yz+zx+xy}-\dfrac{\dfrac{x-1}{x}+\dfrac{y-1}{y}+\dfrac{z-1}{z}}{\dfrac{1}{x}+\dfrac{1}{y}+\dfrac{1}{z}}$.

24. $\dfrac{\dfrac{1}{x+y}+\dfrac{2}{x-y}-\dfrac{9}{3x-y}}{\dfrac{-8y}{y^2-9x^2}}$.

25. $\dfrac{\dfrac{x^2+(a+b)x+ab}{x^2-(a+b)x+ab}}{\dfrac{x^2-b^2}{x^2-a^2}}$.

26. $\dfrac{\dfrac{1}{a}+\dfrac{1}{b+c}}{\dfrac{1}{a}-\dfrac{1}{b+c}}\div\dfrac{1}{1+\dfrac{b^2+c^2-a^2}{2bc}}$.

27. $\dfrac{\dfrac{x+y}{x-y}+\dfrac{x^2+y^2}{x^2-y^2}}{\dfrac{x-y}{x+y}-\dfrac{x^3-y^3}{x^3+y^3}} \times \dfrac{(x-y)^2}{x^4+x^2y^2+y^4}.$

28. $\dfrac{\dfrac{a-b}{1+ab}+\dfrac{b-c}{1+bc}}{1-\dfrac{(a-b)(b-c)}{(1+ab)(1+bc)}} \div \dfrac{1-\dfrac{c}{a}}{\dfrac{1}{a}+c}.$

29. $\dfrac{x^2-\dfrac{(x^2+y^2-z^2)^2}{4y^2}}{\dfrac{(x+y)^2-z^2}{y^2} \times \dfrac{(x-y+z)^2}{4}}.$

184. An expression of the form $\dfrac{a}{b+\dfrac{c}{d+\dfrac{e}{f+\cdots}}}$ is called a **Continued Fraction.**

30. Simplify $\dfrac{1}{1+\dfrac{1}{1+\dfrac{1}{x}}}$.

SOLUTION

$$\frac{1}{1+\dfrac{1}{1+\dfrac{1}{x}}} = \frac{1}{1+\dfrac{1}{\dfrac{x+1}{x}}}$$

$$= \frac{1}{1+\dfrac{x}{x+1}}$$

$$= \frac{x+1}{x+1+x}$$

$$= \frac{x+1}{2x+1}.$$

SUGGESTION. — In the above example, the part first simplified is the *last complex part* $\dfrac{1}{1+\dfrac{1}{x}}$, which is reduced to a simple fraction.

Every continued fraction may be simplified by successively reducing its *last complex part* to a simple fraction.

Simplify the following:

31. $\dfrac{1}{x+\dfrac{1}{1+\dfrac{x+1}{3-x}}}$.

32. $\dfrac{a}{a+1+\dfrac{a}{a+1-\dfrac{1}{a}}}$.

33. $\dfrac{2}{2-\dfrac{2}{2-\dfrac{2}{2-x}}}$.

34. $\dfrac{x-2}{x-2-\dfrac{x}{x-\dfrac{x-1}{x-2}}}$.

35. $\dfrac{1}{a+\dfrac{1}{a+\dfrac{1}{a}}}$.

36. $1+\dfrac{c}{1+c+\dfrac{2c}{1+\dfrac{1}{c}}}$.

REVIEW OF FRACTIONS

185. Reduce to their lowest terms:

1. $\dfrac{x^3+x^2+x-3}{x^3+3x^2+5x+3}$.

2. $\dfrac{x^3-x^2-x-2}{x^3+3x^2+3x+2}$.

3. $\dfrac{x^3+4x^2+8x+5}{x^3+3x^2+7x+5}$.

4. $\dfrac{x^3+3x^2+4x+2}{x^3-3x^2-8x-10}$.

5. $\dfrac{x^3+x^2-22x-40}{x^3-7x^2+2x+40}$.

6. $\dfrac{x^3+10x^2+7x-18}{x^3-8x^2-11x+18}$.

7. $\dfrac{2x^3+7x^2-9x-9}{2x^3+9x^2+x-3}$.

8. $\dfrac{8x^3-22x^2+17x-3}{6x^3-17x^2+14x-3}$.

Simplify:

9. $\dfrac{x}{2y-1}+\dfrac{y}{2y+1}-\dfrac{y-x}{1-4y^2}$.

10. $\dfrac{a^2}{4(1-a)^2}-\left(\dfrac{3}{8(1-a)}+\dfrac{1}{8(a+1)}-\dfrac{1-a}{4(a+1)}\right)$.

11. $\dfrac{2x-1}{x-1}-\dfrac{3x+1}{x+1}+\dfrac{3x-1}{x-2}-\dfrac{2x+1}{x+2}$.

12. $\dfrac{a^3}{(a-b)(a-c)}+\dfrac{b^3}{(b-c)(b-a)}+\dfrac{c^3}{(c-a)(c-b)}$.

13. $\left(1+\frac{2}{m-1}\right)\left(\frac{m^2+m-2}{m^2+m}\right)$.

14. $\left(1-a+a^2\right)\left(\frac{1}{a^2}+\frac{1}{a}+1\right)$.

15. $\left(\frac{x^2}{y^2}+\frac{x}{y}+1\right)\left(\frac{x^2}{y^2}-\frac{x}{y}+1\right)$.

16. $\left(\frac{a+b}{a-b}-\frac{a-b}{a+b}-\frac{4ab}{a^2+b^2}\right)\frac{a^2-b^2}{8b^2}$.

17. $\left(1+\frac{x}{y}\right)\left(\frac{x}{y^2}-\frac{1}{y}+\frac{1}{x}\right)$.

18. $\left(x+1+\frac{1}{x}+\frac{1}{x^2}\right)\div\left(x+1-\frac{1}{x}-\frac{1}{x^2}\right)$.

19. $\left(\frac{a+b}{a-b}+\frac{a^2+b^2}{a^2-b^2}\right)\left(\frac{a+b}{a-b}-\frac{a^3+b^3}{a^3-b^3}\right)$.

20. $\left(1-\frac{2xy}{x^2+y^2}\right)\div\left(\frac{x^3-y^3}{x-y}-3xy\right)$.

21. $(x^2-y^2-z^2-2yz)\div\frac{x+y+z}{x+y-z}$.

22. $\left(\frac{1+a}{1-a}+\frac{4a}{1+a^2}+\frac{8a}{1-a^2}-\frac{1-a}{1+a}\right)\div\left(\frac{1+a^2}{1-a^2}+\frac{4a^2}{1+a^2}-\frac{1-a^2}{1+a^2}\right)$

23. $\dfrac{\frac{a^2x^3}{bd}+\frac{abx^2}{c^2d}-\frac{acx^2}{d^2}-\frac{b^2x}{cd^2}+\frac{a^2x}{bc}-\frac{a}{d}}{\frac{ax}{c}-\frac{b}{d}}$.

24. $\left(x^2-3xy-2y^2+\frac{12y^3}{x+3y}\right)\div\left(3x-6y-\frac{2x^2}{x+3y}\right)$.

25. $\left(\frac{m-3n}{m+n}\right)\left(1+\frac{4n}{m+n}\right)\div\left(\frac{m}{n}+2-\frac{15n}{m}\right)$.

26. $1-\frac{2x+5x^2}{2(x+1)^2}-\left[\frac{x^2+x}{2x-\frac{2}{x}}\right]\left(\frac{3-3x}{(x+1)^2}\right)$.

27. $\left(1+\frac{x}{a-x}\right)\left(\frac{x}{x+a}-\frac{2x^2+2ax-a^2}{x^2+3ax+2a^2}\right)$.

Expand:

28. $\left(\frac{x}{y}+\frac{y}{x}\right)\left(\frac{x}{y}-\frac{y}{x}\right)$.

29. $\left(\frac{x}{y}+\frac{y}{x}\right)\left(\frac{x}{y}+\frac{y}{x}\right)$.

30. $\left(2x-\frac{1}{2x}\right)\left(2x-\frac{1}{2x}\right)$.

31. $\left(\frac{a}{b}+1+\frac{b}{a}\right)\left(\frac{a}{b}-1+\frac{b}{a}\right)$.

32. $\left(x^2y+xy^2\right)\left(\frac{1}{x^3}-\frac{2y}{x^4}+\frac{y^2}{x^5}\right)$.

33. $\left(x^2+x+1\right)\left(1-\frac{1}{x}+\frac{1}{x^2}\right)$.

Simplify:

34. $\dfrac{1+\frac{1}{x^2}+\frac{1}{x^4}}{1+\frac{1}{x}+\frac{1}{x^2}}$.

35. $\dfrac{\left(\frac{m^2+n^2}{n}-m\right)\div\left(\frac{1}{n}-\frac{1}{m}\right)}{\frac{m^3+n^3}{m^2-n^2}}$.

36. $\dfrac{\frac{c}{(a+1)^2}+\frac{d}{(a+1)^2}}{\frac{a}{(a+1)^4}+\frac{1}{(a+1)^4}}$.

37. $\dfrac{1}{1-\frac{1}{1-\frac{1}{1-x}}}$.

38. $\dfrac{\frac{6a}{x+y}-\frac{4}{x+y}}{\frac{1}{(x+y)^2}}$.

39. $1-\dfrac{\frac{a^2+3a+2}{a^2+2a+1}}{\frac{a^2+7a+12}{a^2+5a+4}}$.

40. $\dfrac{\frac{m^3-n^3}{m^3+n^3}\left(1-\frac{2n}{m+n}\right)}{1+\frac{2mn}{m^2-mn+n^2}}$.

41. $\dfrac{1}{2-\frac{3}{4-\frac{5}{6-x}}}$.

42. $\left(\frac{x+y}{x-y}+\frac{x-y}{x+y}\right)\div\left(\frac{x+y}{2(x-y)}-\frac{x-y}{2x+2y}\right)$.

43. $\dfrac{\left(\frac{a}{x^2}+\frac{1}{x}+\frac{1}{a}+\frac{x}{a^2}\right)\left(\frac{a^2}{x^3}-\frac{1}{x}+\frac{x}{a^2}\right)}{\frac{a^3}{x^5}\left(1+\frac{x}{a}\right)}$.

44. $\dfrac{x^3-\frac{8}{y^3}}{x^3y^3-x^2y^2}\times\dfrac{\frac{1}{xy}+\frac{1}{x^2y^2}}{1+\frac{2}{xy}+\frac{4}{x^2y^2}}\times\dfrac{xy-1}{xy+1}$.

SIMPLE EQUATIONS

ONE UNKNOWN NUMBER

186. An *Equation* has been defined, § 2, as an expression of equality between two numbers or quantities.

187. An equation all of whose known numbers are expressed by figures is called a **Numerical Equation.**

188. An equation one or more of whose known numbers is expressed by letters is called a **Literal Equation.**

189. An equation that does not involve an unknown number in any denominator is called an **Integral Equation.**

$x + 5 = 8$ and $\frac{2x}{3} + 5 = 8$ are integral equations. The second equation is integral; for though it contains a fraction, the unknown number x does not appear in the denominator.

190. An equation that involves an unknown number in any denominator is called a **Fractional Equation.**

$x + 5 = \frac{8}{x}$ and $\frac{2x}{x-1} = 7$ are fractional equations.

191. An equation whose members are identical, or such that they may be reduced to the same form, is called an **Identical Equation,** or an **Identity.**

$a + b = a + b$; $a^2 - b^2 = (a + b)(a - b)$ are identical equations.

An equation whose members are numerical is evidently an identical equation.

$10 = 6 + 4$; $8 \times 2 = 6 + 12 - 2$ are identical equations.

A literal equation that is true for all values of the letters involved is an identical equation, or an identity.

$(x + y)^2 = x^2 + 2xy + y^2$ is an identity, because it is true for all values of x and y.

192. An equation that is true for only certain values of its letters is called an **Equation of Condition.**

An equation of condition is usually termed simply an *Equation.*

$x + 4 = 10$ is an equation of condition, because it is true only when the value of x is 6. $x^2 = 9$ is an equation of condition, because it is true only when the value of x is $+3$ or -3.

193. When an equation is reduced to an identity by the substitution of certain numbers for the unknown numbers, the equation is said to be *satisfied.*

When $x = 2$, the equation $3x + 4 = 10$ becomes $6 + 4 = 10$, an identity; consequently, the equation is satisfied.

Any number that satisfies an equation is called a **Root** of the equation.

2 is a root of the equation $3x + 4 = 10$.

Finding the roots of an equation is called **solving the equation.**

194. An integral equation that involves only the first power of one unknown number in any term when the similar terms have been united is called a **Simple Equation,** or an **Equation of the First Degree.**

$3x + 4 = 10$ and $x + 2y = z + 8$ are simple equations.

195. Two equations that have the same roots, each equation having all the roots of the other, are called **Equivalent Equations.**

By the axioms in § 74, if the members of an equation are equally increased or diminished or are multiplied or divided by the same or equal numbers, the resulting numbers are *equal* and, § 186, form an equation. But it does not necessarily follow that the equation so formed is *equivalent* to the given equation.

For example, if both members of the equation $x + 2 = 5$, whose only root is $x = 3$, are multiplied by $x - 1$, the resulting numbers $(x + 2)(x - 1)$ and $5(x - 1)$ are *equal* and form an equation $(x + 2)(x - 1) = 5(x - 1)$; but this equation is not *equivalent* to the given equation, since it is satisfied by $x = 1$ as well as by $x = 3$.

196. PRINCIPLES. — 1. *If the same expression is added to or subtracted from both members of an equation, the resulting equation is equivalent to the given equation.*

2. *If both members of an equation are multiplied or divided by the same known number, except zero, the resulting equation is equivalent to the given equation.*

3. *If both members of an integral equation are multiplied by the same unknown integral expression, the resulting equation has all the roots of the given equation and also the roots of the equation formed by placing the multiplier equal to zero.*

It follows from Prin. 3 that if the same unknown factor is removed from both members of an equation, the resulting equation has all the roots of the given equation except those obtained from the equation formed by placing the factor removed equal to zero.

Principle 1 may be established as follows:

Let $A = B$ (1)

be any equation and C any expression to be added or subtracted.

It is to be proved that $A \pm C = B \pm C$ (2)

is equivalent to (1), the given equation.

All the values of the unknown number or numbers that satisfy (1), that is, make A identical with B, make $A + C$ identical with $B + C$ and $A - C$ identical with $B - C$, that is, satisfy (2). Hence, (2) has all the roots of (1).

For the same reason $A \pm C \mp C = B \pm C \mp C$ (3)

has all the roots of (2). But by the Associative Law for addition (3) may be written $A + 0 = B + 0$, or $A = B$. Hence, (1) has all the roots of (2).

Since (2) has all the roots of (1) and (1) has all the roots of (2), (2) is equivalent to (1), the given equation.

Principles 2 and 3 may be established as follows:

Let $A = B$ (1)

and $MA = MB.$ (2)

From (1), by Prin. 1, $A - B = 0.$ (3)

From (2), by Prin. 1, $M(A - B) = 0.$ (4)

Since the first member of (4) can reduce to zero only when one or both of its factors become 0, (4) is satisfied by those values of the unknown number that make $A - B = 0$, that is, by the roots of (3), or, Prin. 1, of (1); and also by those values of the unknown number that make $M = 0$, that is, by the roots of $M = 0$, but by no other values.

If M is any known number, not zero, M cannot be placed equal to zero and then (4), or (2), is equivalent to (3), or to (1).

If M is an unknown expression, (4), or (2), has the roots of $M = 0$ in addition to the roots of $A - B = 0$, or of (1).

197. By § 196, Prin. 1 and 2, every simple equation involving one unknown number may be reduced to an equivalent equation having the form $x = a$, a being a fixed known number. Hence,

Every simple equation involving one unknown number has one root and only one; also, by § 196, Prin. 3,

The equation $(x - a)(x - b)(x - c) \cdots (x - r) = 0$ *is equivalent to the simple equations* $x - a = 0$, $x - b = 0$, $x - c = 0$, $\cdots x - r = 0$, *and has as many roots as factors of the first degree involving* x.

CLEARING EQUATIONS OF FRACTIONS

198. 1. If one third of a number is 10, what is the number?

2. If $\frac{1}{4}x = 7$, what is the value of x? If $\frac{1}{5}x = 5$, what is the value of x? If $\frac{1}{8}x = 6$, what is the value of x?

3. If $\frac{2}{3}x = 6$, what is the value of $2x$? If $\frac{5}{7}x = 10$, what is the value of $5x$?

4. If $\frac{x}{3} = 5$, what is the form of the resulting equation when both members are multiplied by 3? by 6? by 9? by any multiple of the denominator?

199. The process of changing an equation containing fractions to an equation without fractions is called **Clearing the Equation of Fractions.**

200. PRINCIPLES. — 1. *An equation may be cleared of fractions by multiplying both members by some common multiple of the denominators of the fractions.* (Ax. 4.)

2. *If both members of a fractional equation are multiplied by the expression of lowest degree required to clear the equation of fractions, the resulting equation is equivalent to the given equation.*

Principle 2 may be established as follows:

By § 196, Prin. 1, all the terms of the second member may be transposed to the first member. Hence, uniting the terms of the first member into one and reducing this to its lowest terms, any fractional equation may be reduced to an equivalent equation of the form

$$\frac{A}{B} = 0, \qquad (1)$$

in which A is prime to B, and B is the expression of lowest degree required to clear the equation of fractions.

Since A and B have no common factors, A and B cannot reduce to zero at the same time for any value of the unknown number. Hence, eq. (1) is satisfied by every value of the unknown number that makes $A = 0$, and by no other values; that is, the equation $A = 0$, obtained by multiplying both members of the given equation by the expression of lowest degree required to clear it of fractions, is equivalent to the given equation.

Examples

1. Given $\frac{x-4}{4} = 6 - \frac{x}{3}$, to find the value of x.

PROCESS

$$\frac{x-4}{4} = 6 - \frac{x}{3}$$

Clearing of fractions, $3x - 12 = 72 - 4x$

$$\therefore\ x = 12$$

Explanation. — Since the first fraction will become an integer if the members of the equation are multiplied by 4 or any multiple of 4, and since the second fraction will become an integer if the members of the equation are multiplied by 3 or any multiple of 3, the equation may be cleared of fractions in a single operation by multiplying its members by some *common* multiple of 4 and 3 (§ 196, Prin. 2, § 200, Prin. 1).

Since the terms derived from the numerators will be least or lowest when the multiplier is the least or lowest common multiple of the denominators, the members of the equation should be multiplied by the least common multiple of 4 and 3, which is 12.

The resulting equation is $3x - 12 = 72 - 4x$; $\therefore\ x = 12$.

2. Find the value of x in $\frac{x-1}{2} - \frac{x-2}{3} = \frac{2}{3} - \frac{x-3}{4}$.

Solution. $\frac{x-1}{2} - \frac{x-2}{3} = \frac{2}{3} - \frac{x-3}{4}$.

Clearing of fractions, $6(x-1) - 4(x-2) = 8 - 3(x-3)$.

$$6x - 6 - 4x + 8 = 8 - 3x + 9.$$

$$\therefore\ x = 3.$$

RULE. — *Multiply both members of the equation by the least or lowest common multiple of the denominators.*

1. The multiplier of lowest degree required to clear an equation of fractions so that the resulting equation is equivalent to the given equation is usually the L. C. D. But if fractions having like denominators have not been united and every fraction reduced to its lowest terms, the multiplier required may be of lower degree than the L. C. D.

Thus, given $\frac{2x^2}{x-2} = \frac{3x+2}{x-2} + \frac{5x+8}{3}$.

Uniting terms, $\frac{2x^2-3x-2}{x-2}$, or $2x+1 = \frac{5x+8}{3}$.

Multiplying by 3, $6x+3 = 5x+8$.

$\therefore x = 5$.

Had the given equation been cleared of fractions by multiplying by $3(x-2)$ instead of by 3, the resulting equation simplified, which is $x^2-7x+10=0$, or $(x-5)(x-2)=0$, would have been satisfied both by $x=5$ and by $x=2$. The given equation is satisfied by $x=5$ but not by $x=2$. Hence, the latter value is not a root of the given equation, but has been introduced by using $(x-2)$ times the necessary multiplier, 3. Roots so introduced may be discovered by verification and rejected.

2. If a fraction has the minus sign before it, the signs of all the terms of the numerator must be changed when the denominator is removed.

Find the value of x, and verify the result:

3. $2x + \frac{x}{3} = \frac{35}{3}$.

4. $\frac{x}{4} + 10 = 13$.

5. $\frac{x}{6} + 2x = 26$.

6. $3x - \frac{x}{5} = 14$.

7. $\frac{x}{2} + \frac{x}{6} = \frac{10}{3}$.

8. $7\frac{1}{2} - \frac{3x}{14} = \frac{x}{7}$.

9. $\frac{x}{5} + \frac{x}{7} = 24$.

10. $\frac{2x}{3} - \frac{5}{6} = \frac{x}{4}$.

11. $\frac{x}{2} + \frac{x}{3} - \frac{x}{4} + \frac{3x}{10} - \frac{5x}{12} = 7$.

12. $\frac{25x}{18} - \frac{5x}{9} + \frac{2x}{3} - \frac{5x}{6} = 2$.

13. $\frac{2x}{7} - \frac{x}{4} - \frac{x}{2} + \frac{4x}{7} = \frac{3}{14}$.

14. $\frac{2x}{3}-\frac{7x}{8}+\frac{5x}{18}+\frac{x}{24}=\frac{4}{9}$.

15. $\frac{3x}{4}+\frac{7x}{16}-\frac{x}{2}-\frac{9x}{16}=\frac{1}{8}$.

16. $\frac{15x}{7}+\frac{5x}{6}-\frac{11x}{3}+\frac{19x}{14}=2$.

17. $\frac{2x}{15}+\frac{5x}{25}-\frac{4x}{9}+\frac{x}{6}=\frac{1}{9}$.

18. $\frac{3x}{4}-\frac{7x}{12}=\frac{11x}{36}-\frac{8x}{9}+\frac{3}{2}$.

19. $\frac{3x}{4}+\frac{1}{20}=\frac{3x}{10}+\frac{x}{5}+\frac{4x}{15}$.

20. $\frac{7x+1}{5}-2x+\frac{4x+7}{7}=1$.

21. $\frac{x-1}{2}+\frac{x-2}{3}+\frac{x-3}{4}=\frac{5x-1}{6}$.

22. $\frac{x+1}{3}-\frac{x+4}{5}+\frac{x+3}{4}=16$.

23. $\frac{7x+2}{6}-\frac{12-x}{4}+\frac{x+2}{2}=6$.

24. $\frac{x-3}{7}+\frac{x+5}{3}-\frac{x+2}{6}=4$.

25. $\frac{3x-5}{4}-\frac{7x-13}{6}=3-\frac{x+3}{2}$.

26. $\frac{2x-5}{5}-\frac{3x-2}{7}=1-\frac{x+2}{6}$.

27. $\frac{1-2x}{3}-\frac{7-2x}{4}+\frac{11-2x}{6}=-\frac{7}{12}$.

28. $\frac{x+4}{3}+\frac{2-2x}{6}=\frac{x+1}{2}-3\frac{1}{3}$.

29. $\frac{9x+5}{14}+\frac{8x-7}{6x+2}=\frac{36x+15}{56}+\frac{10\frac{1}{4}}{14}$.

Suggestion. — The equation may be written

§ 104, 3, $\frac{9x}{14}+\frac{5}{14}+\frac{8x-7}{6x+2}=\frac{36x}{56}+\frac{15}{56}+\frac{41}{56}$.

Simplify as much as possible before clearing of fractions.

30. $\frac{3x-2}{2x-5}+\frac{3x-21}{5}=\frac{6x-22}{10}$.

31. $\frac{4x+3}{9}=\frac{8x+19}{18}-\frac{7x-29}{5x-12}$.

32. $\frac{6x+1}{15}-\frac{2x-4}{7x-13}=\frac{2x-1}{5}$.

33. $\frac{10x+17}{18}-\frac{5x-2}{9}=\frac{12x-1}{11x-8}$.

34. $\frac{6x+3}{15}-\frac{3x-1}{5x-25}=\frac{2x-9}{5}$.

35. $\frac{2x+1}{2x-1}-\frac{8}{4x^2-1}=\frac{2x-1}{2x+1}$.

36. Solve the equation $\frac{x-1}{x-2}+\frac{x-6}{x-7}=\frac{x-5}{x-6}+\frac{x-2}{x-3}$.

Solution. — It will be observed that if the fractions in each member were connected by the sign $-$, and the members were simplified, the numerators of the resulting fractions would be simple. The fractions can be made to meet this condition by transposing one fraction in each member.

Consequently, it is sometimes expedient to defer clearing of fractions.

Transposing, $\frac{x-1}{x-2}-\frac{x-2}{x-3}=\frac{x-5}{x-6}-\frac{x-6}{x-7}$.

Uniting terms, $\frac{-1}{x^2-5x+6}=\frac{-1}{x^2-13x+42}$.

Since the fractions are equal and their numerators are equal, their denominators must be equal.

$$x^2-5x+6=x^2-13x+42.$$

$$\therefore\ x=4\tfrac{1}{4}.$$

37. $\frac{x-1}{x-2}+\frac{x-7}{x-8}=\frac{x-5}{x-6}+\frac{x-3}{x-4}$.

38. $\frac{x-3}{x-4}+\frac{x-7}{x-8}=\frac{x-6}{x-7}+\frac{x-4}{x-5}$.

39. $\frac{x+2}{x+1}-\frac{x+3}{x+2}=\frac{x+5}{x+4}-\frac{x+6}{x+5}$.

40. $\frac{x+1}{x+2}+\frac{x+6}{x+7}=\frac{x+2}{x+3}+\frac{x+5}{x+6}$.

41. $\frac{x-5}{x+5}-\frac{x-10}{x+10}=\frac{x-4}{x+4}-\frac{x-9}{x+9}$.

42. $\frac{\frac{7x}{3}-2}{4}-\frac{5x-\frac{1}{2}}{3}=\frac{x-2}{5}-3\frac{1}{3}$.

43. $\frac{x-1}{x-2}+\frac{x-2}{x-3}+\frac{x-6}{x-4}-3=0$.

44. $\frac{x^3+1}{x-1}-\frac{x^3-1}{x+1}=\frac{8}{x^2-1}+2x$.

45. $\frac{x^3+2}{x+1}-\frac{x^3-2}{x-1}=\frac{10}{x^2-1}-2x$.

46. $\frac{\frac{2x}{3}+4}{2}=\frac{7\frac{1}{2}-x}{3}+\frac{x}{2}\left(\frac{6}{x}-1\right)$.

47. $\frac{\frac{4}{5x}-16}{24}-\frac{\frac{2}{5x}+6}{60}=\frac{4\frac{1}{6}}{5}$.

48. $\frac{x}{2}(2-x)-\frac{x}{4}(3-2x)=\frac{x+10}{6}$.

49. $\frac{2x\left(1-\frac{5}{x}\right)}{3}+\frac{3x\left(1-\frac{4}{x}\right)}{4}=\frac{x-4}{\frac{4}{5}}$.

50. $\frac{1}{2}x-2\left(\frac{4x}{5}-3\right)=4-\frac{3}{2}\left(\frac{x}{2}+1\right)$.

51. $\frac{(2x+1)^2}{5}-\frac{(4x-1)^2}{20}=\frac{15}{8}+\frac{3(4x+1)}{40}$.

52. $\frac{1}{2}\cdot\frac{x+1}{x-1}+2=\frac{1}{2}+\frac{x-1}{x+1}-\frac{x^2}{1-x^2}$.

53. $\frac{17+\frac{3}{x}}{3}+\frac{1+\frac{18}{x}}{5}=\frac{\frac{21}{x}-1}{9}+\frac{\frac{100}{x}+\frac{5}{3}}{15}$.

54. $\frac{\frac{1}{4}(x-4)}{\frac{3}{2}}-\frac{4x-16}{6}=\frac{3}{5}-\frac{\frac{2x}{5}+5}{\frac{5}{2}}$.

55. $1+\frac{1}{1+\frac{1}{x}}=\frac{2+\frac{10}{x}}{1+\frac{6}{x}}$.

56. $\frac{1}{\frac{x}{3}+\frac{3}{3x-1}}=\frac{3}{x+5}$.

Literal Equations

1. Solve the equation $\frac{x-b^2}{a}=\frac{x-a^2}{b}$.

Solution

$$\frac{x-b^2}{a}=\frac{x-a^2}{b}.$$

Clearing of fractions, $bx-b^3=ax-a^3$.

Transposing, etc., $ax-bx=a^3-b^3$.

$(a-b)x=a^3-b^3$.

Dividing by $(a-b)$, $x=a^2+ab+b^2$.

Solve the following equations:

2. $\frac{c^2-x}{nx}+\frac{n^2}{cx}=\frac{1}{c}$.

3. $1-\frac{ab}{x}=\frac{7}{ab}-\frac{49}{abx}$.

4. $\frac{a^3}{ab^2}-\frac{2a^2}{b^2x}=1-\frac{2b^2}{a^2x}$.

5. $\frac{x}{b}-\frac{x+2b}{a}=\frac{a}{b}-3$.

6. $\frac{x-2ab}{cx}-\frac{1}{x}=\frac{x-3c}{abx}$.

7. $\frac{x-a}{b}+\frac{2x}{a}=5+\frac{6b}{a}$.

8. $\frac{a^2}{bx}+\frac{b^2}{ax}=\frac{a+b}{ab}-\frac{3(a+b)}{x}$.

9. $\frac{a^2+b^2}{2bx}-\frac{a-b}{2bx^2}=\frac{b}{x}$

10. $a+\frac{b(x+a)}{x-a}=\frac{2ab}{x-a}$.

11. $\frac{x-2a}{a}+\frac{x}{b}=\frac{a^2+b^2}{ab}$.

12. $6x+18\left(1-\frac{a}{2}\right)=a(x-a)$.

13. $b(2x-9c-14b)=c(c-x)$.

14. $a(x-a-2b)+b(x-b)+c(x+c)=0$.

15. $(a-x)(x-b)+(a+x)(x-b)=(a-b)^2$.

16. $\frac{a-b+c}{x+a}=\frac{b-a+c}{x-a}$.

17. $\frac{1}{a(b-x)}+\frac{1}{b(c-x)}-\frac{1}{a(c-x)}=0$.

18. $\frac{x-1}{a-1}-\frac{a-1}{x-1}=\frac{x^2-a^2}{(a-1)(x-1)}$.

19. $\frac{a+x}{a}-\frac{2x}{a+x}+\frac{x^2(x-a)}{a(a^2-x^2)}=\frac{1}{3}$.

20. $\frac{x+a}{b}+\frac{x+c}{a}+\frac{x+b}{c}=\frac{a}{b}+\frac{b}{c}+\frac{c}{a}+1$.

21. $\frac{x^2-ax-bx+ab}{x-a}=\frac{x^2-2bx+2b^2}{x-b}-\frac{c^2}{x-c}$.

22. $\frac{1}{m+n}-\frac{2mn}{(m+n)^3}-\frac{m}{(m+n)^2}=\frac{x-n}{(m+n)^2}$.

23. $\frac{x}{a+b+c}+\frac{x}{a+b-c}=a^2+b^2+c^2+2ab$.

24. $\frac{x+2b}{x-b}+\frac{x+3b}{x+b}=\frac{x+b}{x-3b}+\frac{x+2b}{x+5b}$.

25. $\frac{2x+3a}{x+a}+\frac{3x+7a}{x+2a}=\frac{2a}{x+4a}+5$.

26. $\frac{x+7a}{x+6a}+\frac{x-a}{x-3a}=\frac{x+7a}{x+a}+\frac{x-a}{x+2a}$.

27. $(a-b)(x-c)-(b-c)(x-a)=(c-a)(x-b)$.

Problems

Directions for Solving. — *Represent one of the unknown numbers by x, and from the conditions of the problem find an expression for each of the other unknown numbers.*

Find from the problem two expressions that are equal, and write them as an equation.

Solve the equation.

1. A man bought a farm, a house, and a barn for $12,600. If the house cost twice as much as the barn, and the farm twice as much as the house and barn together, how much did each cost?

Suggestion. — There are three unknown quantities — the cost of the house, the cost of the barn, and the cost of the farm. It is evident that, if the cost of the barn were known, the cost of the house could be found from it, and from both the cost of the farm.

Accordingly, represent the cost of the barn as x dollars, and express the cost of the house and the cost of the farm in terms of x. Discover two expressions for the total cost, and equate them.

2. If A is twice as old as B, and B twice as old as C, how old is each, if the sum of their ages is 140 years?

3. Mr. Henry bought three building lots for $36,000. If the third cost twice as much as the second, and the second 3 times as much as the first, what was the cost of each?

4. A man left $63,000 to his wife, two sons, and a daughter. If each son received twice as much as the daughter, and half as much as the wife, what was the share of each?

5. A man left $\frac{1}{2}$ of his property to his wife, $\frac{1}{4}$ to his son, $\frac{1}{5}$ to his daughter, and the rest, which was $2000, to a hospital. What was the value of his property?

6. A owed B, C, and D $27,000 in all. If he owed B 4 times as much as C, and D $\frac{3}{4}$ as much as B, what sum did he owe each?

7. A person spends $\frac{1}{5}$ of his annual income for board, $\frac{1}{4}$ for clothes, and $260 for other expenses. If he saves $\frac{1}{3}$ of his income, what is his income?

8. A table and a chair cost \$11. The table and a picture cost \$14. If the chair and the picture together cost 3 times as much as the table, what was the cost of each article?

9. A and B together had \$50, and A and C had \$60. After each had spent \$5, A had $\frac{1}{4}$ as much as B and C together. How much had each at first?

10. A gave his age as follows: "$\frac{2}{5}$ of my age less $\frac{1}{9}$ of what it will be a year hence is equal to $\frac{1}{3}$ of my age 5 years ago." What was his age?

11. James is 5 years older than his sister, and 5 years hence he will be $3\frac{1}{2}$ times as old as his sister was 5 years ago. What is the age of each?

12. A's daily wages are $\frac{2}{3}$ of B's, and C's are $\frac{3}{4}$ of A's. If A and C together earn 25 cents more a day than B, what are the daily wages of each?

13. A man paid a debt of \$8.00 with an equal number of 5, 10, and 25-cent pieces. How many of each were there?

14. A man bought equal quantities of white and brown sugar, paying $6\frac{1}{4}$ cents a pound for the former and 5 cents a pound for the latter. How many pounds of each did he buy, if the whole quantity cost him \$1.80?

15. A field is twice as long as it is wide. By increasing its length 20 rods and its width 30 rods, the area will be increased 2200 square rods. What are its dimensions?

16. Three fifths of a certain number exceeds $\frac{1}{2}$ of it by 7. What is the number?

17. One third of a number added to 3 times the number is equal to 50. What is the number?

18. After spending $\frac{3}{5}$ of my income and \$300 more, I had $\frac{1}{4}$ of it left. What was my income?

19. The sum of $\frac{1}{4}$ of a number, $\frac{1}{5}$ of it, and $\frac{2}{3}$ of it is 4 more than $\frac{3}{4}$ of the number. What is the number?

20. The sum of a number, its half, its third, and its fourth, and 16 is 66. What is the number?

21. A man deposited $\frac{2}{3}$ of his month's wages in a bank, and paid out $\frac{1}{2}$ of the remainder for groceries and \$ 9 for dry goods. If he had \$ 3 left, how much money had he at first?

22. Divide 500 into two parts, such that the greater decreased by $\frac{1}{4}$ of the smaller is 5 times as much as the smaller decreased by $\frac{1}{2}$ of the larger.

23. Divide 61 into two parts, such that, if the greater is divided by the less, the quotient will be 3 and the remainder 1.

24. Divide 111 into two parts, such that the first diminished by 3 is equal to the second divided by 3.

25. Divide 40 into two parts, such that the first divided by 3 is equal to the second divided by 5.

26. Divide 40 into two parts, such that the first is 10 greater than twice the second.

27. Divide 44 into two parts, such that, if the greater is divided by 5 and the less by 7, the difference of the quotients will be 4.

28. Divide 54 into two parts, such that $\frac{1}{4}$ of the first part is equal to $\frac{1}{5}$ of the second.

SOLUTION

Let $x = \frac{1}{4}$ of the first part or $\frac{1}{5}$ of the second part.

Then, $4x =$ the first part,

and $5x =$ the second part;

$\therefore$ $4x + 5x = 54$;

whence, $x = 6$,

$4x = 24$, the first part,

and $5x = 30$, the second part.

29. Divide 40 into three parts, such that $\frac{1}{2}$ of the first, $\frac{1}{3}$ of the second, and $\frac{1}{5}$ of the third are equal.

30. Find three parts of 60, such that the first divided by 5, the second multiplied by 2, and the third increased by 5 are equal.

31. Divide 72 into four parts, such that the first divided by 2, the second diminished by 2, the third multiplied by 2, and the fourth increased by 2 are equal.

32. A can do a piece of work in 8 days. If B can do it in 10 days, in how many days can both working together do it?

SOLUTION

Let x = the required number of days.

Then, $\frac{1}{x}$ = the part of the work both can do in 1 day,

$\frac{1}{8}$ = the part of the work A can do in 1 day,

$\frac{1}{10}$ = the part of the work B can do in 1 day;

$\therefore \quad \frac{1}{x} = \frac{1}{8} + \frac{1}{10} = \frac{9}{40}$.

Solving, $x = \frac{40}{9}$, or $4\frac{4}{9}$, the required number of days.

33. A can do a piece of work in 10 days, and B can do it in 15 days. How long will it take both to do it?

34. Three pipes empty into a cistern. One can fill the cistern in 5 hours, another in 6 hours, and the third in 10 hours. How long will it take the three pipes together to fill it?

35. A can do a piece of work in 10 days, B can do it in 12 days, and C can do it in 8 days. In how many days can all together do it?

36. A can pave a walk in 6 days, and B can do it in 8 days. How long will it take A to finish the job after both have worked 3 days?

37. A can build a wall in 15 days, but with the aid of B and C, the wall can be built in 6 days. If B does as much work in 1 day as C does in 2 days, in how many days can B and C separately build the wall?

38. A and B can dig a ditch in 10 days, B and C can dig it in 6 days, and A and C in $7\frac{1}{2}$ days. In what time can each man do the work?

SUGGESTION. — Since A and B can dig $\frac{1}{10}$ of the ditch in 1 day, B and C $\frac{1}{6}$ of it in 1 day, and A and C $\frac{2}{15}$ of it in 1 day, $\frac{1}{10} + \frac{1}{6} + \frac{2}{15}$ is twice the part they can all dig in 1 day.

39. A and B can load a car in $2\frac{8}{11}$ hours, B and C in $3\frac{3}{7}$ hours, and A and C in $3\frac{1}{13}$ hours. How long will it take each alone to load it?

40. A boy bought some oranges at the rate of 30 cents a dozen. He sold $\frac{3}{4}$ of them for 4 cents each, and the rest for 3 cents each. If he gained 90 cents, how many oranges did he buy?

41. Find a fraction whose value is $\frac{4}{7}$ and whose denominator is 15 greater than its numerator.

42. Find a fraction whose value is $\frac{2}{3}$ and whose numerator is 3 greater than half of its denominator.

43. The numerator of a certain fraction is 8 less than the denominator; and if each term of the fraction is decreased by 5, the value of the fraction becomes $\frac{1}{3}$. What is the fraction?

44. The units' digit of a number expressed by two digits exceeds the tens' digit by 5. If the number increased by 63 is divided by the sum of its digits, the quotient is 10. What is the number?

SOLUTION

Let x = the digit in tens' place.

Then $x + 5$ = the digit in units' place,

and $10x + (x + 5)$, or $11x + 5$ = the number;

$\therefore \quad \frac{11x + 5 + 63}{2x + 5} = 10;$

whence, $x = 2,$

and $x + 5 = 7.$

Therefore, the number is 27.

45. The tens' digit of a number expressed by two digits is 3 times the units' digit. If the number diminished by 33 is divided by the difference of the digits, the quotient is 10. What is the number?

46. The tens' digit of a number expressed by two digits is $\frac{1}{2}$ of the units' digit. If the number increased by 27 is divided by the sum of its digits, the quotient is $6\frac{1}{4}$. What is the number?

47. In a purse containing \$1.45 there are $\frac{1}{2}$ as many quarters as 5-cent pieces and $\frac{2}{3}$ as many dimes as 5-cent pieces. How many pieces are there of each kind?

48. A woman spent \$10 more than $\frac{2}{5}$ of her money; then \$10 more than $\frac{2}{5}$ of the remainder. If she had \$2 left, how much money had she at first?

49. A man spent \$1 less than $\frac{2}{5}$ of his money and had left \$1 less than $\frac{2}{3}$ of it. How much money had he at first?

50. A girl found that she could buy 12 apples with her money and have 5 cents left, or 10 oranges and have 6 cents left, or 6 apples and 6 oranges and have 2 cents left. How much money had she?

51. A boy spent $\frac{1}{2}$ of his money and $\frac{1}{2}$ a cent more, then $\frac{1}{2}$ of the remainder and $\frac{1}{2}$ a cent more, then $\frac{1}{2}$ of what he had left and $\frac{1}{2}$ a cent more, when he found that he had 2 cents remaining. How much had he at first?

52. Five boys bought a boat, agreeing to share the expense equally. But one of them having left \$1 of his share unpaid, each of the others had to pay $\frac{1}{12}$ more than one fifth of the expense. What was the cost of the boat?

53. A sum of money was divided among A, B, C, and D so that A received $\frac{1}{2}$ as much as all the others, B received $\frac{1}{3}$ as much as all the others, C received $\frac{1}{4}$ as much as all the others, and D received \$2800 less than A. What sum did each receive?

54. In an alloy of 90 ounces of silver and copper there are 6 ounces of silver. How much copper must be added that 10 ounces of the new alloy may contain $\frac{2}{5}$ of an ounce of silver?

55. If 80 pounds of sea water contain 4 pounds of salt, how much fresh water must be added that 45 pounds of the new solution may contain $1\frac{2}{3}$ pounds of salt?

56. An officer, attempting to arrange his men in a solid square, found that with a certain number of men on a side he had 34 men over, but with 1 man more on a side he needed 35 men to complete the square. How many men had he?

SUGGESTION. — With x men on a side, the square contained x^2 men; with $x + 1$ men on a side, there were places for $(x + 1)^2$ men. Since the number of men was the same under both arrangements, $x^2 + 34 = (x + 1)^2 - 35$.

57. A regiment drawn up in the form of a solid square lost 60 men in battle. Afterward, when the men were arranged in a solid square with 1 man less on a side, it was found that there was 1 man over. How many men were there in the regiment at first?

58. A regiment drawn up in the form of a solid square was reënforced by 240 men. When the regiment was formed again in a solid square, there were 4 more men on a side. How many men were there in the regiment at first?

59. A man was hired for 40 days under the following conditions: for every day he worked he was to receive \$3 besides his board, while for every day he was idle he was to receive nothing, but was to be charged \$1.20 for his board. If at the end of the period he received \$57, how many days did he work?

60. A man invested \$800, a part at 6% and the rest at 5%. If the total annual interest was \$45, how much did he invest at each rate?

SUGGESTION. — Let x = the number of dollars invested at 6%.
Then, $800 - x$ = the number of dollars invested at 5%;
$\therefore \frac{6}{100}x + \frac{5}{100}(800 - x) = 45.$

61. A man has $\frac{2}{3}$ of his property invested at 4%, $\frac{1}{4}$ at 3%, and the remainder at 2%. How much property has he, if his annual income is \$860?

62. A man put out \$4330 in two investments. On one of them he gained 12%, and on the other he lost 5%. If his net gain was \$251, what was the amount of each investment?

63. There were distributed among 20 men and 25 women \$160 in such a way that the sum of what a man and a woman received was \$7. How much did the men receive, and how much did the women receive?

64. At what time between 5 and 6 o'clock will the hands of a clock be together?

SOLUTION

Let x = the number of minute spaces that the minute hand travels after 5 o'clock before they come together.

Then, $\frac{x}{12}$ = the number of minute spaces that the hour hand travels in the same time.

Since they are 25 minute spaces apart at 5 o'clock,

$$x - \frac{x}{12} = 25;$$

$\therefore x = 27\frac{3}{11}$, the number of minutes after 5 o'clock.

65. At what time between 1 and 2 o'clock will the hands of a clock be together?

66. At what time between 6 and 7 o'clock will the hands of a clock be together?

67. At what time between 10 and 11 o'clock will the hands of a clock point in opposite directions?

68. At what times between 4 and 5 o'clock will the hands of a clock be 15 minute spaces apart?

69. When after 9 o'clock and before 10 o'clock will the hands of a clock be at right angles to each other?

70. A man rows downstream at the rate of 6 miles an hour and returns at the rate of 3 miles an hour. How far downstream can he go and return within 9 hours?

71. At the rate of 3 miles an hour uphill and 4 miles an hour downhill a woman can walk 60 miles in 17 hours. How much of the distance is uphill, and how much is downhill?

72. A hare pursued by a hound takes 4 leaps while the hound takes 3; but 2 of the hound's leaps are equal to 3 of the hare's. If the hare has a start equal to 60 of her own leaps, how many leaps must the hound take to catch the hare?

SOLUTION

Let $3x$ = the number of leaps taken by the hound.

Then, $4x$ = the number of leaps taken by the hare.

Suppose a = the number of feet in one leap of the hare.

Then, $\frac{3a}{2}$ = the number of feet in one leap of the hound,

$\frac{3a}{2} \times 3x = \frac{9ax}{2}$, the number of feet the hound runs,

and $a \times 4x = 4ax$, the number of feet the hare runs.

Since the hare has a start equal to 60 times a feet, or $60a$ feet, the hare runs $60a$ feet less than the hound.

Therefore, $4ax = \frac{9ax}{2} - 60a.$

Dividing by a, $4x = \frac{9x}{2} - 60.$

Therefore, $x = 120,$

and $3x = 360,$ the number of leaps taken by the hound.

73. A fox is 70 leaps ahead of a hound and takes 5 leaps while the hound takes 3; but 3 of the hound's leaps equal 7 of the fox's. How many leaps must the hound take to catch the fox?

74. A rabbit makes 5 leaps while a dog makes 4; but 3 of the dog's leaps are equal to 4 of the rabbit's. If the rabbit has a start of 20 leaps, how many leaps will each take before the rabbit is caught?

75. A hound is 39 of his leaps behind a rabbit that takes 7 leaps while the hound takes 8. If 6 leaps of the rabbit are equal to 5 leaps of the hound, how many leaps must the hound take to catch the rabbit?

76. A wheelman and a pedestrian leave the same place at the same time to go to a point 54 miles distant, the former traveling 3 times as fast as the latter. The wheelman makes the trip and returning meets the pedestrian in $6\frac{3}{4}$ hours from the time they started. What is the rate of each?

77. If 1 pound of lead loses $\frac{5}{57}$ of a pound, and 1 pound of iron loses $\frac{2}{15}$ of a pound when weighed in water, how many pounds of lead and of iron are there in a mass of lead and iron that weighs 159 pounds in air and 143 pounds in water?

78. If 97 ounces of gold weighs 92 ounces when it is weighed in water, and 21 ounces of silver weighs 19 ounces when it is weighed in water, how many ounces of gold and of silver are there in a mass of gold and silver that weighs 320 ounces in air and 298 ounces in water?

79. A merchant increases his capital annually by $\frac{1}{4}$ of it, and at the end of each year takes out \$ 800 for expenses. At the end of three years, after taking out his expenses, he finds that his capital is \$ 6325. What was his original capital?

80. A merchant added annually to his capital $\frac{1}{5}$ of it, and at the end of each year took out \$ 1000 for expenses. If at the end of the third year, after taking out the last \$ 1000, he had $\frac{8}{5}$ of his original capital, what was his original capital?

81. A cistern can be filled by one pipe in 20 minutes, by another in 15 minutes, and it can be emptied by a third in 10

minutes. If the three pipes are running at the same time, how long will it take to fill the cistern?

82. A man walked from A to B at the rate of 2 miles an hour, and rode back at the rate of $3\frac{1}{5}$ miles an hour, being gone 13 hours. How far is it from A to B?

83. An express train whose rate is 40 miles an hour starts 1 hour and 4 minutes after a freight train and overtakes it in 1 hour and 36 minutes. How many miles does the freight train run per hour?

84. The distance from Albany to Syracuse is 148 miles. A canal boat leaves Albany for Syracuse, moving at the rate of 3 miles in 2 hours; at the same time another leaves Syracuse for Albany, moving at the rate of 5 miles in 4 hours. How far from Albany do they meet?

85. A steamer goes 5 miles downstream in the same time that it goes 3 miles upstream; but if its rate each way is diminished 4 miles an hour, its rate downstream will be twice its rate upstream. How fast does it go in each direction?

86. A, B, and C together can do a piece of work in $3\frac{1}{5}$ days; B can do $\frac{1}{2}$ as much as A, and C can do $\frac{3}{4}$ as much as B in a day. In how many days can each do the work alone?

87. A can do a piece of work in 6 days that B can do in 14 days. A began the work, and after a certain number of days B took his place and finished the work in 10 days from the time it was begun by A. How many days did B work?

88. In a certain weight of gunpowder the niter composed 10 pounds more than $\frac{3}{4}$ of the weight, the sulphur 3 pounds more than $\frac{1}{12}$, and the charcoal 3 pounds less than $\frac{1}{10}$ of the niter. What was the weight of the gunpowder?

89. A library containing 16,000 volumes was divided into five departments. In the department of history there were twice as many volumes as in the department of science, and 500 more than $\frac{1}{3}$ as many volumes as in the juvenile department. Of fiction there were $7\frac{1}{2}$ times as many volumes as of science, and 500 less than 8 times as many as in the reference department. How many volumes were there in each department?

90. An estate was divided among four heirs, A, B, C, and D. If the value of the estate had been \$1000 less, what A received would have been $\frac{1}{3}$ of it, and what B received $\frac{1}{4}$ of it; if the value of the estate had been $\frac{1}{5}$ greater, what C received would have been $\frac{1}{5}$ of it, and what D received $\frac{1}{6}$ of it. What sum did each receive?

91. A father takes 3 steps while his son takes 5; but 2 of the father's steps are equal to 3 of the son's. How many steps will the son require to overtake his father, who is 36 steps ahead?

92. A purse contained some money and a ring worth \$10 more than the money. If the purse was worth $\frac{1}{3}$ as much as the money it contained, and the purse and the money together were worth $\frac{1}{2}$ as much as the ring, what was the value of each?

93. Brass is $8\frac{2}{3}$ times as heavy as water, and iron $7\frac{1}{2}$ times as heavy as water. A mixed mass weighs 57 pounds, and when immersed displaces 7 pounds of water. How many pounds of each metal does the mass contain?

94. A man began business with \$4725, and annually added to his capital $\frac{1}{3}$ of it. At the end of each year he put aside a certain sum for expenses. If at the end of the third year, after taking out the sum for expenses, his capital was \$3800, what were his annual expenses?

95. The sum of two numbers is s, and their difference d. What are the numbers?

SOLUTION

Let $x =$ the greater number.

Then, $x - d =$ the less number,

and $x + x - d = s$;

$$\therefore\ x = \frac{s+d}{2},\ \text{the greater number,} \qquad (1)$$

and $$-d = \frac{s-d}{2},\ \text{the less number.} \qquad (2)$$

If the sum of two numbers is 30, and their difference is 6, what are the numbers?

By (1), the greater number is $\frac{30+6}{2}$, or 18;

by (2), the less number is $\frac{30-6}{2}$, or 12.

A problem in which the numbers assumed to be known are represented by letters to which any values may be assigned is called a **General Problem.**

Problem 95 is a general problem.

The results obtained in solving a *general problem* may be considered *formulæ* for solving similar problems.

96. Divide c cents between two boys so that one shall have d cents more than the other. If $c = 50$ and $d = 10$, how much will each receive?

97. A horse and a saddle are together worth a dollars, and the horse is worth m times as much as the saddle. What is the value of each? What, if $a = 160$ and $m = 3$?

98. Divide b into two parts one of which represents m times the other. What will they be, if b represents 100, and m, 4?

99. An estate of a dollars is divided between two heirs in the proportion of m to n. What is the share of each? What is the share of each, if $a = 40{,}000$, $m = 5$, and $n = 3$?

100. If A can do a piece of work in a days, and B in b days, in what time can both do it working together? Give the result, if $a = 10$ and $b = 15$.

101. An alloy of two metals is composed of m parts of one to n parts of the other. How many pounds of each are required in the composition of a pounds of the alloy?

Bell metal is an alloy of 5 parts of tin and 16 parts of copper. How many pounds of tin and of copper are there in a bell which weighs 4200 pounds?

102. A wheelman set out from B at the rate of r miles an hour. a hours later another started in pursuit at the rate of p miles an hour. How far from B will the second wheelman overtake the first? What will be the distance, if $r = 10$, $p = 12$, and $a = 8$?

103. A man traveled from home at the rate of a miles an hour and returned at the rate of b miles an hour. If he made the entire journey in h hours, how far from home did he go? How far, if $a = 4$, $b = 3\frac{1}{2}$, and $h = 15$?

SIMULTANEOUS SIMPLE EQUATIONS

TWO UNKNOWN NUMBERS

201. 1. If $x + y = 12$, what is the value of x? of y? How many values may x have? How many may y have?

2. In the expression $x + y = 12$, x and y each may have an indefinite number of values, but if, *at the same time*, $x - y = 4$, what is the value of x? of y?

3. Although one equation containing two unknown numbers has an indefinite number of values for each unknown number, or is *indeterminate*, what can be said about the values of the unknown numbers, when *two* equations are given involving the same values of the unknown numbers, but in different relations, that is, when two *independent equations* are given?

202. Two or more equations in which the unknown numbers have the same values are called **Simultaneous Equations.**

If x and y represent the same numbers in $2x + 3y = 19$ as they represent in $5x - y = 22$, $2x + 3y = 19$ and $5x - y = 22$ are simultaneous equations.

203. Equations that represent different relations between the unknown numbers, and so cannot be reduced to the same form, are called **Independent Equations.**

$3x + 3y = 18$ and $2x + 2y = 12$ really express but one relation between x and y; viz., that their sum is 6. Hence, both equations may be reduced to the same form, as $x + y = 6$. But $3x + 3y = 18$ and $x + 3y = 14$ express different relations between x and y, and cannot be reduced to the same form. Hence, they are independent equations.

204. An equation whose unknown numbers may have an infinite number of values is called an **Indeterminate Equation.**

$x + y = 6$ is an indeterminate equation, because, if $x = 2$, $y = 4$; if $x = 3$, $y = 3$; if $x = 2\frac{1}{2}$, $y = 3\frac{1}{2}$; etc.

205. PRINCIPLE. — *Every single equation involving two or more unknown numbers is indeterminate.*

206. The process of deriving from a set of simultaneous equations, equations involving a less number of unknown numbers than is found in the given equations is called **Elimination.**

207. Two sets of simultaneous equations each having all the roots of the other set are called **Equivalent Systems** of equations.

Thus, $\left\{\begin{matrix} x+y=8 \\ 3x+2y=21 \end{matrix}\right\}$ and $\left\{\begin{matrix} 2x+2y=16 \\ 3x+2y=21 \end{matrix}\right\}$

are equivalent systems, for each system is satisfied by the same set of values, $x=5$ and $y=3$, and neither is satisfied by any other set of values.

208. Any equation in a set of simultaneous equations may be transformed into an equivalent equation by employing the principles of equivalency stated in § 196, since these principles apply to all equations. Hence, it remains to seek the principle by which simultaneous equations are combined in the process of elimination without introducing or losing roots.

This **Principle of Elimination** may be stated as follows, a and b being known multipliers, not zero, and either positive or negative:

If any equation of a system is replaced by the sum or difference of a times that equation and b times another equation of the system, the resulting system is equivalent to the given system.

The proof is as follows:

By § 196, Prin. 1, all the terms of the second member of an equation may be transposed to the first member.

Then, let
$$\left.\begin{matrix} A=0 \\ B=0 \\ \cdot\ \cdot\ \cdot \end{matrix}\right\} \tag{1}$$

be the given system, and let a and b be any known multipliers except zero and either positive or negative.

It is to be proved that the system

$$\left.\begin{matrix} aA+bB=0 \\ B=0 \\ \cdot\ \cdot\ \cdot\ \cdot\ \cdot \end{matrix}\right\} \tag{2}$$

is equivalent to the given system (1).

Since a and b are known multipliers, not zero, by § 196, Prin. 2, every set of values of the unknown numbers that makes $A=0$ makes $aA=0$, and every set of values that makes $B=0$ makes $bB=0$. Hence, every set of

values that satisfies (1) makes $aA + bB$ equal to zero and thus satisfies (2), since all of the equations of (1) and (2) except the first are the same.

Again, since every set of values that satisfies (2) makes B, or bB equal to zero and also makes $aA + bB = 0$, every such set of values makes $aA = 0$ and therefore, by § 196, Prin. 2, makes $A = 0$ and satisfies (1).

Since all the roots of (1) are roots of (2) and all the roots of (2) are roots of (1), (1) and (2) are equivalent systems.

209. Elimination by Addition and Subtraction.

1. If $2x + 2y = 10$ and $3x - 2y = 5$ are added, what is the resulting equation? When may an unknown number be eliminated by *addition?*

2. If $x + 2y = 5$ is subtracted from $3x + 2y = 11$, what is the resulting equation? When may a number be eliminated by *subtraction?*

PRINCIPLE. — *A literal number having the same coefficient in two equations may be eliminated by adding the equations, if the coefficients have unlike signs, or by subtracting one equation from the other, if the coefficients have like signs.*

EXAMPLES

1. Find the value of x and of y in $2x+3y = 7$ and $3x+4y=10$.

PROCESS

$$\begin{aligned} 2x + 3y &= 7 && (1)\\ 3x + 4y &= 10 && (2)\\ \hline 6x + 9y &= 21 && (3)\\ 6x + 8y &= 20 && (4)\\ \hline y &= 1 && (5)\\ 2x + 3 &= 7 && (6)\\ x &= 2 && (7) \end{aligned}$$

EXPLANATION. — Since x has not the same coefficients in both equations, the equations are multiplied by such numbers as will make the coefficients of x alike. Multiplying eq. (1) by 3 and eq. (2) by 2 gives equations (3) and (4). From these x is eliminated by subtraction, and the value of y is found.

The value of x may be found by multiplying eq. (1) and (2) by such numbers as will make the coefficients of y equal and then subtracting the resulting equations.

Or, the value of x may be found by substituting the value of y for y in one of the given equations, as eq. (1).

PROOF OF THE EQUIVALENCE. — By the principle of elimination, the system (1, 5), obtained by subtracting (4) from (3), is equivalent to the given system (1, 2). Hence, the only value of y in the given system is 1.

Since y represents 1 in the given system, (1) is equivalent to (6), which by § 196 is equivalent to (7). Hence, the given system, being equivalent to (1, 5), is equivalent to (7, 5), which is satisfied by one and only one set of values, $x = 2$ and $y = 1$.

RULE. — *If necessary, multiply the equations by such numbers as will cause the coefficients of one letter to be numerically equal in the resulting equations.*

When the signs of these coefficients are unlike, add the equations; when the signs are alike, subtract one equation from the other.

Solve by addition or subtraction:

2. $\begin{cases} 7x - 5y = 52, \\ 2x + 5y = 47. \end{cases}$

3. $\begin{cases} 3x + 2y = 23, \\ x + y = 8. \end{cases}$

4. $\begin{cases} 3x - 4y = 7, \\ x + 10y = 25. \end{cases}$

5. $\begin{cases} 2x - 10y = 15, \\ 2x - 4y = 18. \end{cases}$

6. $\begin{cases} 3x - y = 4, \\ x + 3y = -2. \end{cases}$

7. $\begin{cases} 4x - y = 19, \\ x + 3y = 21. \end{cases}$

8. $\begin{cases} x + 2y = 5, \\ 2x + y = 1. \end{cases}$

9. $\begin{cases} 2x + 3y = 17, \\ 3x + 2y = 18. \end{cases}$

10. $\begin{cases} 3x + 4y = 25, \\ 4x + 3y = 31. \end{cases}$

11. $\begin{cases} 5x + 6y = 32, \\ 7x - 3y = 22. \end{cases}$

12. $\begin{cases} 3x + 6y = 39, \\ 9x - 4y = 51. \end{cases}$

13. $\begin{cases} 7x - 9y = 6, \\ x + 2y = 14. \end{cases}$

14. $\begin{cases} 13x - y = 20, \\ 4x + 2y = 20. \end{cases}$

15. $\begin{cases} 8x - 3y = 44, \\ 7x - 5y = 29. \end{cases}$

16. $\begin{cases} 6x - 5y = 33, \\ 4x + 4y = 44. \end{cases}$

17. $\begin{cases} x + 14y = 38, \\ 14x + y = 142 \end{cases}$

18. $\begin{cases} 5x + y = 12, \\ x + 5y = 36. \end{cases}$

19. $\begin{cases} 3x + 11y = 67, \\ 5x - 3y = 5. \end{cases}$

20. $\begin{cases} \frac{x}{4} + \frac{y}{2} = 12, \\ \frac{x}{4} - \frac{y}{2} = -2. \end{cases}$

21. $\begin{cases} \frac{x}{3} + \frac{y}{3} = 7, \\ \frac{x}{6} + \frac{y}{2} = 6\frac{1}{2}. \end{cases}$

210. Elimination by Comparison.

1. If, in the simultaneous equations $x-y=3$ and $x+4y=13$, the terms containing y are transposed, what will be the resulting equations?

2. Since the second members of these derived equations are each equal to x, how do they compare with each other?

3. If these second members, then, are placed equal to each other, how many unknown numbers will this equation contain?

4. How may an unknown number be eliminated from two simple simultaneous equations by *comparison?*

EXAMPLES

1. Find the value of x and of y in $2x-3y=10$ and $5x+2y=6$.

PROCESS

$$2x-3y=10 \quad (1)$$
$$5x+2y=6 \quad (2)$$
$$x=\frac{10+3y}{2} \quad (3)$$
$$x=\frac{6-2y}{5} \quad (4)$$
$$\therefore \frac{10+3y}{2}=\frac{6-2y}{5} \quad (5)$$
$$\therefore y=-2 \quad (6)$$
$$x=\frac{10-6}{2} \quad (3)$$
$$x=2 \quad (7)$$

EXPLANATION. — Solving eq. (1) as if x were the only unknown number, the value of x is given as in eq. (3). In like manner, solving eq. (2) for x, another expression is found for the value of x, as in eq. (4).

Since the equations are simultaneous, the unknown numbers have the same values in each, and the two values of x form an equation, as eq. (5), from which x has been eliminated. Solving eq. (5), the value of y is found to be -2, eq. (6).

By a similar process the value of x may be found; or, substituting the value of y for y in one of the preceding equations, as (3), the value of x is found to be 2, eq. (7).

PROOF OF THE EQUIVALENCE. — By § 196. (3) is equivalent to (1) and (4) is equivalent to (2). Hence, the system (3, 4) is equivalent to the given system.

Since (5), which by § 196 is equivalent to (6), may be obtained by subtracting (3) from (4) and transposing, by the principle of elimination, § 208, (6, 1), or (6, 3), is equivalent to (4, 3), or to (2, 1), the given system.

But since -2 is the only value of y in the given system, by § 196, (7) is equivalent to (3), or to (1). Hence, (7, 6), which is satisfied by one and only one set of values, $x=2$ and $y=-2$, is equivalent to the given system. Therefore, the given system is satisfied by $x=2$, $y=-2$ and by no other values of x and y.

RULE. — *Find an expression for the value of the same unknown number in each equation, equate the two expressions, and solve the equation thus formed.*

Solve by comparison:

2. $\begin{cases} 3x - 2y = 10, \\ x + y = 70. \end{cases}$

3. $\begin{cases} 5x + y = 22, \\ x + 5y = 14. \end{cases}$

4. $\begin{cases} 2x + 3y = 24, \\ 5x - 3y = 18. \end{cases}$

5. $\begin{cases} 3x + 5y = 14, \\ 2x - 3y = 3. \end{cases}$

6. $\begin{cases} 3x + 2y = 36, \\ 5x - 9y = 23. \end{cases}$

7. $\begin{cases} 2x + 7y = 8, \\ 3x + 9y = 9. \end{cases}$

8. $\begin{cases} 4x + 6y = 19, \\ 3x - 2y = \frac{9}{2}. \end{cases}$

9. $\begin{cases} 4x + 3y = 34, \\ 11x + 5y = 87. \end{cases}$

10. $\begin{cases} 4x - 13y = 5, \\ 3x + 11y = -17. \end{cases}$

11. $\begin{cases} 18x - 3y = 4y, \\ 1 - 4x + 3y = 27. \end{cases}$

12. $\begin{cases} 7y - x = 0, \\ x + 2y = 18. \end{cases}$

13. $\begin{cases} 3y + 9 = 5x, \\ 16 - 2x = 5y. \end{cases}$

14. $\begin{cases} 5x - 40 = y, \\ 5y - 60 = x. \end{cases}$

15. $\begin{cases} 2y - 11x = 67, \\ 2x + 5y = 20. \end{cases}$

211. Elimination by Substitution.

1. In an equation containing two unknown numbers, if the value of one is found, how is the value of the other obtained?

2. Express the value of x in the first of the simultaneous equations $x + y = 5$ and $x + 2y = 7$ by transposing y to the second member.

3. When this expression for the value of x is substituted for x in the second equation, how many unknown numbers does the resulting equation contain?

4. How may an unknown number be eliminated from simultaneous equations by *substitution?*

Examples

1. Find the value of x and of y in $x+5y=9$ and $3x-2y=10$.

PROCESS

$$x + 5y = 9 \quad (1)$$
$$3x - 2y = 10 \quad (2)$$
$$x = 9 - 5y \quad (3)$$
$$3(9 - 5y) - 2y = 10 \quad (4)$$
$$\therefore\ y = 1 \quad (5)$$
$$x = 9 - 5 \quad (3)$$
$$x = 4 \quad (6)$$

EXPLANATION. — Solving eq. (1) for x, $x = 9 - 5y$.

Since the given equations are simultaneous, x has the same value in eq. (2) as in eq. (1).

If $9 - 5y$ is substituted for x in eq. (2), the resulting equation will be true. Substituting and solving, $y = 1$.

Substituting the value of y for y in eq. (3), $x = 4$, eq. (6).

PROOF OF THE EQUIVALENCE. — By § 196, (3) is equivalent to (1). In the process, (4) is obtained by substituting the expression equal to x in (3) for x in (2), or by substituting $3(9 - 5y)$ for $3x$ in (2). Since the substitution of $3(9 - 5y)$ for $3x$ may be performed by subtracting $3x = 3(9 - 5y)$ from (2), by the principle of elimination (4), or the equivalent equation (5), may take the place of (2) in the system (3, 2) equivalent to the given system. Hence, (3, 5) is equivalent to (1, 2).

Since the only value of y in the system (3, 5) is 1, (6) is equivalent to (3); and (6, 5), which is satisfied by only one set of values, $x = 4$, $y = 1$, is equivalent to (3, 5) and therefore to (1, 2).

RULE. — *Find an expression for the value of one of the unknown numbers in one of the equations.*

Substitute this value for that unknown number in the other equation, and solve the resulting equation.

Solve by substitution:

2. $\begin{cases} x - y = 4, \\ 4y - x = 14. \end{cases}$

3. $\begin{cases} x + y = 10, \\ 6x - 7y = 34. \end{cases}$

4. $\begin{cases} 3x - 4y = 26, \\ x - 8y = 22. \end{cases}$

5. $\begin{cases} 6y - 10x = 14, \\ y - x = 3. \end{cases}$

6. $\begin{cases} y + 1 = 3x, \\ 5x + 9 = 3y. \end{cases}$

7. $\begin{cases} 17 = 3x + z, \\ 7 = 3z - 2x. \end{cases}$

8. $\begin{cases} 4y = 10 - x, \\ y - x = 5. \end{cases}$

9. $\begin{cases} 7z - 3x = 18, \\ 2z - 5x = 1. \end{cases}$

10. $\begin{cases} 3 - 15y = -x, \\ 3 + 15y = 4x. \end{cases}$

11. $\begin{cases} 1 - x = 3y, \\ 3(1 - x) = 40 - y. \end{cases}$

Solve by any method, eliminating without clearing of fractions, when possible:

12. $\begin{cases} x+\frac{y}{3}=11, \\ \frac{x}{3}+3y=21. \end{cases}$

13. $\begin{cases} \frac{3x}{4}+\frac{4y}{5}=21, \\ \frac{2x}{3}+\frac{3y}{5}=17. \end{cases}$

14. $\begin{cases} \frac{x}{3}=11-\frac{y}{2}, \\ \frac{x}{3}+\frac{2y}{7}=8. \end{cases}$

15. $\begin{cases} \frac{x}{8}+4y=15, \\ \frac{x}{6}+\frac{2y}{3}=6. \end{cases}$

16. $\begin{cases} \frac{x-1}{4}+y=3, \\ \frac{x-1}{4}+4y=9. \end{cases}$

17. $\begin{cases} \frac{3x}{4}+\frac{2y}{3}=20, \\ \frac{x}{2}+\frac{3y}{4}=17. \end{cases}$

18. $\begin{cases} \frac{x}{3}=\frac{y}{2}, \\ \frac{x}{3}-\frac{y}{3}=1. \end{cases}$

19. $\begin{cases} \frac{x+y}{2}-\frac{x-y}{3}=8, \\ \frac{x+y}{3}+\frac{x-y}{4}=11. \end{cases}$

20. $\begin{cases} \frac{x}{2}-\frac{y}{3}-1=0, \\ \frac{2x-1}{2}-\frac{3y-1}{3}=\frac{5}{6}. \end{cases}$

21. $\begin{cases} \frac{7+x}{5}-\frac{2x-y}{4}=3y-5, \\ \frac{5y-7}{2}+\frac{4x-3}{6}=18-5x. \end{cases}$

22. $\begin{cases} \frac{x}{2}-12=\frac{y}{4}+8, \\ \frac{x+y}{5}+\frac{x}{3}=\frac{2y-x}{4}+35. \end{cases}$

23. $\begin{cases} \frac{1}{x-1}-\frac{3}{x+y}=0, \\ \frac{3}{x-y}+3=0. \end{cases}$

24. $\begin{cases} \frac{x}{2}-12=\frac{y+32}{4}, \\ \frac{y}{8}+\frac{3x-2y}{5}=25. \end{cases}$

25. $\begin{cases} \frac{.2y+.5}{1.5}=\frac{.49x-.7}{4.2}, \\ \frac{.5x-.2}{1.6}=\frac{41}{16}-\frac{1.5y-11}{8}. \end{cases}$

26. $$\begin{cases} \dfrac{x+y}{5}+\dfrac{x-y}{5}=\dfrac{2x-y}{8}+\dfrac{4y-x}{5}+1, \\ \dfrac{3x}{4}-\dfrac{y}{5}=y+12. \end{cases}$$

27. $$\begin{cases} x+\frac{1}{2}(3x-y-1)=\frac{1}{4}+\frac{3}{4}(y-1), \\ \frac{1}{5}(4x+3y)=\frac{1}{10}(7y+24). \end{cases}$$

28. $$\begin{cases} \dfrac{6x+9}{4}+\dfrac{3x+5y}{4x-6}=3\frac{1}{4}+\dfrac{3x+4}{2}, \\ \dfrac{8y+7}{10}+\dfrac{6x-3y}{2(y-4)}=4+\dfrac{4y-9}{5}. \end{cases}$$

29. $$\begin{cases} \dfrac{3x-5y}{3}-\dfrac{2x-8y-9}{12}=\dfrac{31}{12}, \\ \left(\dfrac{x}{7}+\dfrac{y}{4}+1\frac{1}{3}\right)-\left(4x-\dfrac{y}{8}-25\right)=\dfrac{5}{6}. \end{cases}$$

30. $$\begin{cases} x-20-\dfrac{2y-x}{23-x}=\dfrac{2x-59}{2}, \\ y-\dfrac{3-y}{x-18}-30=\dfrac{3y-73}{3}. \end{cases}$$

31. $$\begin{cases} \dfrac{3x+6}{7}-\dfrac{x+5}{3y-5}=\dfrac{6x-2}{14}, \\ \dfrac{2y-3}{6}+\dfrac{3y+4}{5x-7}=\dfrac{3y+5}{9}. \end{cases}$$

32. $$\begin{cases} \dfrac{x}{2}+\dfrac{16-x}{2}=30+\dfrac{5y+2x}{40-x}, \\ \dfrac{2y-3}{y+8}+\dfrac{83-8y}{8}=10-y. \end{cases}$$

33 $$\begin{cases} 4x+\dfrac{2y-\dfrac{x}{2}}{17-3x}=5+\dfrac{16x-1}{4}, \\ 50-\dfrac{y-1}{\dfrac{5x-10}{3}}=8y+\dfrac{147-24y}{3}. \end{cases}$$

34. Solve $\begin{cases} \frac{4}{x}-\frac{3}{y}=\frac{14}{5}, \\ \frac{2}{x}+\frac{5}{y}=\frac{25}{3}. \end{cases}$

These equations and some others that follow, though not strictly simple equations, can be solved as follows for some of their roots:

SOLUTION

$$\frac{4}{x}-\frac{3}{y}=\frac{14}{5} \tag{1}$$

$$\frac{2}{x}+\frac{5}{y}=\frac{25}{3} \tag{2}$$

(2) × 2, $$\frac{4}{x}+\frac{10}{y}=\frac{50}{3} \tag{3}$$

(3) − (1), $$\frac{13}{y}=\frac{208}{15} \tag{4}$$

$$\frac{1}{y}=\frac{16}{15} \tag{5}$$

$$\therefore y=\frac{15}{16}. \tag{6}$$

Substituting the value of $\frac{1}{y}$ in equation (1),

$$\frac{4}{x}-\frac{48}{15}=\frac{14}{5} \tag{7}$$

$$\frac{1}{x}=\frac{3}{2} \tag{8}$$

$$\therefore x=\frac{2}{3}. \tag{9}$$

In fractional equations in which the denominators are simple expressions like the above, an unknown number should be eliminated before clearing of fractions.

35. $\begin{cases} \frac{x}{2}-\frac{2y}{3}=-2, \\ \frac{5x}{2}+\frac{y}{3}=12. \end{cases}$

36. $\begin{cases} \frac{x}{3}+\frac{y}{3}=13, \\ \frac{4y}{3}-\frac{x}{3}=-8. \end{cases}$

37. $\begin{cases} \frac{5}{x}+\frac{6}{y}=64, \\ \frac{6}{x}+\frac{5}{y}=73\frac{1}{2}. \end{cases}$

38. $\begin{cases} \frac{10}{x}+\frac{5}{y}=20, \\ \frac{5}{x}+\frac{10}{y}=57\frac{1}{2}. \end{cases}$

39. $\begin{cases} \frac{5}{x} - \frac{3}{y} = -2, \\ \frac{25}{x} + \frac{1}{y} = 6. \end{cases}$

40. $\begin{cases} \frac{2}{x} - \frac{3}{y} = 5, \\ \frac{5}{x} - \frac{2}{y} = 7. \end{cases}$

41. $\begin{cases} \frac{4}{x} + \frac{3}{y} = \frac{9}{8}, \\ \frac{3}{x} + \frac{4}{y} = \frac{11}{12}. \end{cases}$

42. $\begin{cases} \frac{7}{x} + \frac{8}{y} = 30, \\ \frac{7}{y} + \frac{8}{x} = 30. \end{cases}$

43. $\begin{cases} \frac{3}{2x} - \frac{1}{y} = -3, \\ \frac{5}{2x} + \frac{3}{y} = 23. \end{cases}$

44. $\begin{cases} \frac{7}{8x} - \frac{2}{3y} = 10, \\ \frac{5}{6x} - \frac{2}{11y} = 17. \end{cases}$

Literal Simultaneous Equations

1. Solve $\begin{cases} ax + by = m, \\ cx + dy = n. \end{cases}$

Solution

$$ax + by = m \tag{1}$$

$$cx + dy = n \tag{2}$$

(1) × d, $$adx + bdy = dm \tag{3}$$

(2) × b, $$bcx + bdy = bn \tag{4}$$

(3) − (4), $$(ad - bc)x = dm - bn$$

$$\therefore x = \frac{dm - bn}{ad - bc}. \tag{5}$$

(1) × c, $$acx + bcy = cm \tag{6}$$

(2) × a, $$acx + ady = an \tag{7}$$

(7) − (6), $$(ad - bc)y = an - cm$$

$$\therefore y = \frac{an - cm}{ad - bc}. \tag{8}$$

In literal simultaneous equations, elimination is usually performed by the method of addition and subtraction.

2. $\begin{cases} ax + by = m, \\ bx - ay = c. \end{cases}$

3. $\begin{cases} ax - by = m, \\ cx - dy = r. \end{cases}$

4. $\begin{cases} ax = by, \\ x + y = ab. \end{cases}$

5. $\begin{cases} x - ay = n, \\ bx + y = p. \end{cases}$

6. $\begin{cases} a(x - y) = 5, \\ bx - cy = n. \end{cases}$

7. $\begin{cases} a(a - x) = b(y - b), \\ ax = by. \end{cases}$

8. $\begin{cases} x + y = b - a, \\ bx - ay + 2ab = 0. \end{cases}$

9. $\begin{cases} \frac{1}{x} + \frac{1}{y} = \frac{1}{a}, \\ \frac{1}{x} - \frac{1}{y} = \frac{1}{b}. \end{cases}$

10. $\begin{cases} \frac{a}{x} - \frac{b}{y} = -1, \\ \frac{b}{x} - \frac{a}{y} = -1. \end{cases}$

11. $\begin{cases} \frac{x}{a} + \frac{y}{b} = 2ab, \\ \frac{x}{ab} + \frac{y}{ab} = a + b. \end{cases}$

12. $\begin{cases} \frac{x}{a} + \frac{y}{b} - 2 = 0, \\ bx - ay = 0. \end{cases}$

13. $\begin{cases} \frac{x}{a} + \frac{y}{b} = 1, \\ \frac{x}{b} - \frac{y}{a} = \frac{1}{2}. \end{cases}$

14. $\begin{cases} \frac{1}{ax} + \frac{1}{by} = c, \\ \frac{1}{bx} - \frac{1}{ay} = d. \end{cases}$

15. $\begin{cases} \frac{a}{x} + \frac{b}{y} = c, \\ \frac{m}{x} + \frac{n}{y} = e. \end{cases}$

16. $\begin{cases} \frac{x+1}{y+1} = \frac{a+b+1}{a-b+1}, \\ x - y = 2b. \end{cases}$

17. $\begin{cases} \frac{x+y}{a} = \frac{x-y}{b}, \\ \frac{x-y}{a} = \frac{y-a}{b}. \end{cases}$

18. $\begin{cases} \frac{1}{x-a} = \frac{1}{a-y}, \\ \frac{x+y}{x-y} = a. \end{cases}$

19. $\begin{cases} \frac{x}{a} + \frac{y}{b} = c, \\ \frac{x}{b} + \frac{y}{c} = d. \end{cases}$

20. $\begin{cases} \frac{a}{a+x} + \frac{b}{b-y} = \frac{a}{b}, \\ \frac{b}{a+x} + \frac{a}{b-y} = \frac{b}{a}. \end{cases}$

Problems

1. There are two numbers such that if twice the first is added to 3 times the second, the sum will be 130; but if 5 times the first is diminished by the second, the remainder will be 70. What are the numbers?

Solution

Let x = the first number,
and y = the second number.
Then, $2x + 3y = 130$,
and $5x - y = 70$.
Eliminating y, $17x = 340$,
$x = 20$.
Whence, by substitution, $y = 30$.

2. A drover sold 3 cows and 7 horses to one person for \$ 600, and to another person, at the same prices, 3 cows and 3 horses for \$ 300. How much per head did he get for each?

3. With \$ 30 a man can buy 20 yards of one kind of cloth and 50 yards of another; with \$ 23 he can buy 30 yards of the first kind and 20 yards of the second kind. What is the price of each per yard?

4. If 45 bushels of wheat and 37 bushels of rye together cost \$ 62.70, and 37 bushels of wheat and 25 bushels of rye, at the same prices, cost \$ 48.30, what is the price of each per bushel?

5. Henry expended 95 cents for apples and oranges, paying 5 cents for each orange and 4 cents for each apple. If he had 22 of both, how many of each did he buy?

6. Five years ago A was $\frac{1}{3}$ as old as B, and 10 years hence he will be $\frac{1}{2}$ as old as B. What are their ages?

7. A said to B, "If you were twice as old, and I were $\frac{1}{2}$ as old, or if you were $\frac{1}{3}$ as old, and I were 3 times as old, the sum of our ages would be 70." How old was each?

8. A boy is given 28 cents to buy a dozen cakes. He finds that some cost 2 cents each and some 3 cents each. How many of each kind can he purchase?

9. A said to B, "Give me \$ 20, and I shall have 3 times as much money as you." B replied, "Give me \$ 5, and I shall have twice as much money as you." How much money had each?

SOLUTION

Let $x =$ the number of dollars A had,

and $y =$ the number of dollars B had.

Then, $x + 20 = 3(y - 20)$,

and $y + 5 = 2(x - 5)$.

Solving, $x = 25$, the number of dollars A had,

and $y = 35$, the number of dollars B had.

10. If A gives B \$ 100, B will have 4 times as much money as A; but if B gives A \$ 200, A will have 4 times as much money as B. What sum of money has each?

11. A said to B, "Give me 20 cents of your money, and I shall have half as much as you." B replied, "Give me 25 cents of your money, and I shall have 5 times as much as you." How much had each?

12. If A had \$ 300 more, he would have twice as much as B; if B had \$ 300 less, he would have $\frac{1}{5}$ as much as A. How much money has each?

13. If 1 is added to each term of a fraction, its value will be $\frac{2}{3}$; if 1 is subtracted from each term of the fraction, its value will be $\frac{1}{2}$. What is the fraction?

SOLUTION

Let $\frac{x}{y}$ represent the fraction.

Then, $\frac{x+1}{y+1} = \frac{2}{3}$,

and $\frac{x-1}{y-1} = \frac{1}{2}$.

Solving, $x = 3$,

and $y = 5$.

That is, $\frac{3}{5}$ is the fraction.

14. If 1 is added to the numerator of a certain fraction, its value becomes $\frac{3}{4}$; if 2 is added to the denominator, its value becomes $\frac{1}{2}$. What is the fraction?

15. Find a fraction that is equal to $\frac{1}{3}$ when its terms are diminished by 2, and is equal to $\frac{3}{5}$ when its terms are increased by 2.

16. A certain number expressed by two digits is equal to 7 times the sum of its digits; if 27 is subtracted from the number, the difference will be expressed by reversing the order of the digits. What is the number?

SOLUTION

Let $x =$ the digit in tens' place,

and $y =$ the digit in units' place.

Then, $10x + y =$ the number,

and $10y + x =$ the number with its digits reversed;

$\therefore 10x + y = 7(x + y)$,

and $10x + y - 27 = 10y + x$.

Solving, $x = 6$,

and $y = 3$.

Hence, $10x + y = 60 + 3$, or 63, the number.

17. The sum of the two digits of a certain number is 12, and when 18 is subtracted from the number the order of the digits is reversed. What is the number?

18. When a certain number expressed by two digits is divided by the sum of its digits, the quotient is 8; and when the first digit is diminished by 3 times the second, the remainder is 1. What is the number?

19. The sum of the two digits of a number is 12. If the order of the digits is reversed, the number will lack 12 of being doubled. What is the number?

20. A farmer bought 100 acres of land for \$ 3250. If part of it cost him \$ 40 an acre and the rest of it \$ 15 an acre, how many acres were there of each kind?

21. The admission to an entertainment was 50 cents for adults and 35 cents for children. If the proceeds from 100 tickets amounted to \$ 39.50, how many tickets of each kind were sold?

22. A man paid a bill of \$ 16 in 25-cent pieces and 5-cent pieces. If the number of coins was 80, how many of each kind were there?

23. A man paid \$ 1 for some apples at 3 cents each and some oranges at 5 cents each. He sold $\frac{2}{5}$ of the apples and $\frac{1}{4}$ of the oranges at cost for 34 cents. How many of each did he buy?

24. A and B together can do a piece of work in 12 days. After A has worked alone for 5 days, B finishes the work in 26 days. In what time can each alone do the work?

25. A blacksmith and his son had a contract to make a certain number of horseshoes. If both had worked together, they could have done the work in 6 days. But the father worked 8 days, and the son finished the work in 3 days. In how many days could each have done the work?

26. A man and his two sons can dig a ditch in 6 days; if the man and either son work 7 days, the other son can complete the ditch by working 2 days. In what time can each alone dig the ditch?

27. A certain number of persons agree to share equally the expense of hiring a coach. If each paid 75 cents, there would be \$ 1.25 over; but if each paid 50 cents, there would be \$ 2.50 lacking. What is the number of persons and the expense of hiring the coach?

28. A train ran a certain distance at a uniform rate. Had the rate been increased 5 miles an hour, the journey would have been 2 hours shorter; but had the rate been diminished 5 miles an hour, the journey would have been $2\frac{1}{2}$ hours longer. What was the distance and the rate of the train?

SUGGESTION. — Let x miles per hour be the actual rate of the train and y the number of hours required to complete the journey.

29. A sum of money was divided equally among a certain number of persons. If there had been 4 persons more, the share of each would have been \$ 3 less; but if there had been

2 persons less, the share of each would have been \$2 more. Among how many persons was the money divided and what was the share of each?

30. A dealer had eggs to sell and wished to buy potatoes. He found that 6 dozen eggs were worth 10 cents more than 2 bushels of potatoes; and that 10 dozen eggs were worth 10 cents less than 4 bushels of potatoes. How much were eggs and potatoes worth?

31. If a rectangular floor were 2 feet wider and 5 feet longer, its area would be 140 square feet greater; if it were 7 feet wider and 10 feet longer, its area would be 390 square feet greater. What are its dimensions?

32. If 54 is added to a certain number, expressed by two digits whose sum is 8, the order of the digits will be reversed. What is the number?

33. If 13 is added to a certain number, the sum will be equal to 5 times the sum of the two digits of the number; and if 36 is added to the number, the order of its digits will be reversed. What is the number?

34. A and B can do a piece of work in a days, or if A works m days alone, B can finish the work by working n days. In how many days can each do the work?

35. A can build a wall in c days, and B can build it in d days. How many days must each work so that, after A has done a part of the work, B can take his place and finish the wall in a days from the time A began?

36. One cask contains a mixture of 20 gallons of wine and 30 gallons of water, and another contains a mixture of 12 gallons of wine and 15 gallons of water. How many gallons must be drawn from each cask to form a mixture that will contain 8 gallons of wine and 11 gallons of water?

SUGGESTION. — If x gallons of the mixture are drawn from the first cask, $\frac{2}{5}x$ gallons of it will be wine.

If y gallons of the mixture are drawn from the second cask, $\frac{4}{7}y$ gallons of it will be wine.

37. "If I had received 3 oranges more for my money," said A, "they would have cost me 1 cent less each; but if I had received 2 less, they would have cost me 1 cent more each." How many oranges had he bought, and at what price each?

38. A merchant mixes two kinds of tea. If he mixes it in parts proportional to 7 and 5, the value of the mixture is 46 cents a pound. If he mixes it in parts proportional to 5 and 7, the value of the mixture is 50 cents a pound. What is each kind of tea worth per pound?

39. A man invested \$4000, a part at 5% and the rest at 4%. If the annual income from both investments was \$175, what was the amount of each investment?

40. A man invested a dollars, a part at $r\%$ and the rest at $s\%$ yearly. If the annual income from both investments was b dollars, what was the amount of each investment?

41. A sum of money, at simple interest, amounted to b dollars in t years, and to a dollars in s years. What was the principal, and what was the rate of interest?

42. A had a certain sum invested at a certain rate per cent, and B had \$100 less invested at a rate 2% higher. B's annual income was \$56 greater than A's; but if B's rate upon his investment had been only 1% higher than A's his annual income would have been only \$25 greater than A's. How much was invested by each man, and at what rate?

43. A crew can row 8 miles downstream and back, or 12 miles downstream and half the way back in $1\frac{1}{2}$ hours. What is the rate of rowing in still water and the velocity of the stream?

44. A man rows 15 miles downstream and back in 11 hours. The current is such that he can row 8 miles downstream in the same time as 3 miles upstream. What is his rate of rowing in still water, and what is the velocity of the stream?

45. A box will hold 18 quires of paper and 18 bunches of envelopes, or 20 quires of paper and 15 bunches of envelopes. How many quires of paper will the box hold? How many bunches of envelopes will it hold?

46. A shelf will hold 20 arithmetics and 24 algebras or 15 arithmetics and 36 algebras. How many arithmetics will the shelf hold? How many algebras will it hold?

47. Two men had a certain distance to row and took turns in rowing. Whenever the first rowed, the boat moved at a rate sufficient to cover the entire distance in 10 hours, and whenever the second rowed, in 14 hours. If the journey was completed in 12 hours, how many hours did each row?

48. A train ran 1 hour and 36 minutes, and was then detained 40 minutes. It then proceeded at $\frac{6}{5}$ of its former rate and reached its destination 16 minutes late. If the detention had occurred 10 miles farther on, the train would have arrived 20 minutes late. At what rate did the train set out, and what was the whole distance traveled?

49. A certain number of people charter an excursion boat, agreeing to share the expense equally. If each pays a cents, there will be b cents lacking from the necessary amount; and if each pays c cents, d cents too much will be collected. How many persons are there, and how much should each pay?

50. A sum of money was to be divided equally among a certain number of persons, but a persons more than were expected appeared to claim a share, and in consequence each received b dollars less. If there had been c persons less than were expected, each would have received d dollars more. How many persons appeared, and how much did each receive?

Give the results when $a = 5$, $b = 100$, $c = 4$, and $d = 125$.

51. A and B working together can do a piece of work in a days. But finding it impossible to work at the same time, A works b days, and later B finishes the work in c days. In how many days can each do the work alone?

If $a = 5\frac{5}{11}$, $b = 5$, and $c = 6$, in how many days can each do the work alone?

52. A purse holds c crowns and d guineas; a crowns and b guineas will fill $\frac{m}{n}$th of it. How many will it hold of each?

How many, if $c = 12$, $d = 6$, $a = 4$, $b = 6$, $m = 1$, and $n = 2$?

53. A mine is emptied of water by two pumps which together discharge m gallons per hour. Both pumps can do the work in b hours, or the larger can do it in a hours. How many gallons per hour does each pump discharge? What is the discharge of each per hour when $a = 5$, $b = 4$, and $m = 1250$?

54. Two trains are scheduled to leave A and B, m miles apart, at the same time, and to meet in b hours. If the train that leaves B is a hours late and runs at its customary rate, it will meet the first train in c hours. What is the rate of each train?

What is the rate of each, if $m = 800$, $c = 9$, $a = 1\frac{3}{5}$, and $b = 10$?

55. If a quarts of good wine is mixed with b quarts of poorer wine, the mixture will be worth c cents a quart; if b quarts of the better wine is mixed with a quarts of the poorer, the mixture will be worth d cents a quart. What is each kind of wine worth per quart? What is each kind of wine worth per quart, if $a = 40$, $b = 20$, $c = 100$, and $d = 80$?

212. Discussion of the general solution of a system of two simultaneous simple equations involving two unknown numbers.

Let $$ax + by = c \tag{1}$$

and * $$a'x + b'y = c' \tag{2}$$

be any two simultaneous simple equations.

$(1) \times b'$, $$ab'x + bb'y = b'c \tag{3}$$

$(2) \times b$, $$a'bx + bb'y = bc' \tag{4}$$

$(3) - (4)$, $$(ab' - a'b)x = b'c - bc \tag{5}$$

$(1) \times a'$, $$aa'x + a'by = ca' \tag{6}$$

$(2) \times a$, $$aa'x + ab'y = c'a \tag{7}$$

$(7) - (6)$, $$(ab' - a'b)y = c'a - ca' \tag{8}$$

By the principles of equivalence the given system may be replaced by the equivalent system (5, 8), in which (5) involves x alone and (8) involves y alone. By § 197, each of these simple equations involving one unknown number has one and only one root, which can be found except when the common coefficient of x and y is equal to zero. Hence, when $ab' - a'b$ is not equal to zero, the given system is satisfied by one and only one set of values

$$x = \frac{b'c - bc'}{ab' - a'b} \quad \text{and} \quad y = \frac{c'a - ca'}{ab' - a'b}.$$

* In algebraic notation a', a'', a''', etc., are read 'a prime,' 'a second,' 'a third,' etc.

If $ab' - a'b = 0$, that is, if $ab' = a'b$, the first members of (3) and (4) are identical, and therefore the second members must be equal. The same is true of equations (6) and (7). Hence, (4) is only a different form of (3), and (7) is only a different form of (6); that is, (1) and (2) are not independent equations.

But if $ab' - a'b$ is not equal to zero, neither (3) and (4) nor (6) and (7) are reducible to the same form; that is, (1) and (2) are independent equations.

It is evident from the Distributive Law for multiplication that the equations (3) and (4), and also (6) and (7), cannot be combined by addition or subtraction unless x and y have the same values in (2) as in (1); that is, that (1) and (2) cannot be solved unless they are *simultaneous* equations.

It is evident that equations (5) and (8), and therefore (1) and (2), cannot be solved if $ab' - a'b = 0$, since § 196, Prin. 2, the members cannot be divided by a known expression equal to 0; and it has been shown that (1) and (2) are dependent or independent equations according as $ab' - a'b$ is or is not equal to zero.

Hence, it follows that:

Two simple equations involving two unknown numbers cannot be solved unless the equations are simultaneous and independent.

Every system of two independent simultaneous simple equations involving two unknown numbers can be solved, and is satisfied by one, and only one, set of values of its unknown numbers.

THREE OR MORE UNKNOWN NUMBERS

213. 1. In the equations $x + 2y + z = 8$ and $2x + y - z = 1$, how may z be eliminated?

2. If one of the unknown numbers in the above equations is eliminated, how many unknown numbers will be left?

3. How many independent equations are necessary before the values of two unknown numbers can be found?

4. How many independent equations containing the same two unknown numbers can be formed by combining the equations in (1)?

5. Since only one derived equation containing two unknown numbers was obtained from the given equations by eliminating z, and since we must have two such equations before we can find the values of x and y, if another independent equation involving x, y, and z is combined with either of the equations in (1), how

many independent equations containing x and y only will be available for finding the values of x and y?

6. When the values of x and y are found, how may the value of z be found?

7. Then, how many independent equations containing three unknown numbers must be given, so that the values of the unknown numbers may be found? How many to find the values of four unknown numbers?

214. PRINCIPLE. — *Every system of independent simultaneous simple equations involving the same number of unknown numbers as there are equations can be solved, and is satisfied by one and only one set of values of its unknown numbers.*

The above principle may be established as follows:

From the given system of n equations involving n unknown numbers, a second system of $n - 1$ equations involving $n - 1$ unknown numbers may be derived by eliminating one of the unknown numbers; from the second system a third system of $n - 2$ equations involving $n - 2$ unknown numbers may be derived; and this process may be continued until the nth system, a single simple equation involving only one unknown number, is obtained.

Since, § 197, this equation has one and only one root, by substituting this value in either of the two equations of the next preceding system and solving, one and only one value of the other number in that equation is obtained; by substituting these two values in any one of the three equations of the next preceding system, one and only one value of the remaining unknown number in that equation is obtained; and by continuing this process, the value of each of the other unknown numbers is obtained.

By the principles of equivalent equations, the following system of n equations may be substituted for the given system: the single equation finally derived by elimination and composing the nth system; either of the two equations of the preceding, or $(n - 1)$th system; any one of the three equations of the system preceding that, or of the $(n - 2)$th system; and so on to any one of the n equations in the 1st or given system.

But each of the n equations just described has one and only one value of an unknown number. Hence, the given system can be solved, and is satisfied by one and only one set of values of its unknown numbers.

If the number of unknown numbers is greater than the number of independent simultaneous equations, the last equation obtained by repeated eliminations is indeterminate, and hence the system is indeterminate.

If the number of unknown numbers is less than the number of independent simultaneous equations, say $n - p$, any $n - p$ of the equations involving the $n - p$ unknown numbers form a determinate system.

Examples

1. Find the values of x, y, and z in $\begin{cases} x+2y+3z=14, \\ 2x+y+2z=10, \\ 3x+4y-3z=2. \end{cases}$

Solution

$$x+2y+3z=14 \tag{1}$$

$$2x+y+2z=10 \tag{2}$$

$$3x+4y-3z=2 \tag{3}$$

Eliminating z by combining (1) and (3),

$$(1)+(3), \qquad 4x+6y=16 \tag{4}$$

Eliminating z by combining (2) and (3),

$$(2)\times 3, \qquad 6x+3y+6z=30 \tag{5}$$

$$(3)\times 2, \qquad 6x+8y-6z=4 \tag{6}$$

$$\text{Adding,} \qquad 12x+11y=34 \tag{7}$$

Eliminating x by combining (7) and (4),

$$(4)\times 3, \qquad 12x+18y=48 \tag{8}$$

$$(8)-(7), \qquad 7y=14 \tag{9}$$

$$\therefore\ y=2 \tag{10}$$

$$\text{Substituting in (4),} \qquad 4x+12=16 \tag{11}$$

$$\therefore\ x=1 \tag{12}$$

Substituting the values of x and y in (1),

$$1+4+3z=14 \tag{13}$$

$$\therefore\ z=3 \tag{14}$$

Explanation. — Eliminating z from (1) and (3) and from (2) and (3), two simultaneous equations, (4) and (7), are obtained involving x and y. By the principle of elimination, § 208, the new system (1, 4, 7), or (2, 4, 7), or (3, 4, 7), is equivalent to the given system.

Eliminating x from (4) and (7), a simple equation involving but one unknown number y is obtained, and from this equation the value of y is found, equation (10). Hence, the system (1, 4, 7) has been replaced by the equivalent system (1, 4, 10), which is, therefore, equivalent to the given system.

Substituting 2 for y in (4), the value of x is found, giving a new system (1, 12, 10) equivalent to the given system. Substituting the values of both x and y in (1), the value of z is found, giving the desired system (14, 12, 10) equivalent to the given system.

Solve the following:

2. $\begin{cases} 2x - y + 2z = 12, \\ x + 3y + z = 41, \\ 2x + y + 4z = 22. \end{cases}$

3. $\begin{cases} 3x + 5y - z = 8, \\ 4x + 3y + 2z = 47, \\ 6x + 5y - 2z = 11. \end{cases}$

4. $\begin{cases} x + 3y - z = 10, \\ 2x + 5y + 4z = 57, \\ 3x - y + 2z = 15. \end{cases}$

5. $\begin{cases} x + y + z = 53, \\ x + 2y + 3z = 105, \\ x + 3y + 4z = 134. \end{cases}$

6. $\begin{cases} x - y + z = 30, \\ 3y - x - z = 12, \\ 7z - y + 2x = 141. \end{cases}$

7. $\begin{cases} 8x - 5y + 2z = 53, \\ x + y - z = 9, \\ 13x - 9y + 3z = 71. \end{cases}$

8. $\begin{cases} x + 3y + 4z = 83, \\ x + y + z = 29, \\ 6x + 8y + 3z = 156. \end{cases}$

9. $\begin{cases} 2x + 3y + 4z = 29, \\ 3x + 2y + 5z = 32, \\ 4x + 3y + 2z = 25. \end{cases}$

10. $\begin{cases} 2x - 3y + 4z - v = 4, \\ 4x + 2y - z + 2v = 13, \\ x - y + 2z + 3v = 17, \\ 3x + 2y - z + 4v = 20. \end{cases}$

11. $\begin{cases} 3x - 2y + z = 2, \\ 2x + 5y + 2z = 27, \\ x + 3y + 3z = 25. \end{cases}$

12. $\begin{cases} 4x - 5y + 3z = 14, \\ x + 7y - z = 13, \\ 2x + 5y + 5z = 36. \end{cases}$

13. $\begin{cases} 2x + y - 3z + 4w = 44, \\ 3x - 2y + z - w = -1, \\ 4x - y + 2z + w = 55, \\ 5x - 3y + 4z - w = 39. \end{cases}$

14. $\begin{cases} 7x - 1 = 3y, \\ 11z - 1 = 7v, \\ 4z - 1 = 7y, \\ 19x - 1 = 3v. \end{cases}$

15. $\begin{cases} x + \frac{1}{2}y + \frac{1}{3}z = 32, \\ \frac{1}{3}x + \frac{1}{4}y + \frac{1}{5}z = 15, \\ \frac{1}{4}x + \frac{1}{5}y + \frac{1}{6}z = 12. \end{cases}$

16. $\begin{cases} \frac{1}{6}x - \frac{1}{5}y + \frac{1}{4}z = 3, \\ \frac{1}{5}x - \frac{1}{4}y + \frac{1}{5}z = 1, \\ \frac{1}{4}x - \frac{1}{3}y + \frac{1}{2}z = 5. \end{cases}$

17. $\begin{cases} \dfrac{x+y}{3} + 3z = 29, \\ \dfrac{2x-y}{2} + 2z = 22, \\ 3x - y = 3(z - 1). \end{cases}$

18. $\begin{cases} 3x + y - z + 2v = 0, \\ 3y - 2x + z - 4v = 21, \\ x - y + 2z - 3v = 6, \\ 4x + 2y - 3z + v = 12. \end{cases}$

19. Solve
$$\begin{cases} u+v+x+y-z=5, \\ u+v+x-y+z=7, \\ u+v-x+y+z=9, \\ u-v+x+y+z=11, \\ v-u+x+y+z=13. \end{cases}$$

SOLUTION. — Adding the equations,

$$3u+3v+3x+3y+3z=45.$$

Dividing by 3, $$u+v+x+y+z=15.$$

Subtracting each of the given equations from this equation,

$$2z=10,\quad 2y=8,\quad 2x=6,\quad 2v=4,\quad 2u=2;$$

$$\therefore\ z=5,\quad y=4,\quad x=3,\quad v=2,\quad u=1.$$

Solve the following:

20. $\begin{cases} x+y=9, \\ y+z=7, \\ z+x=5. \end{cases}$

21. $\begin{cases} v+x+y=15, \\ x+y+z=18, \\ y+z+v=17, \\ z+v+x=16. \end{cases}$

22. $\begin{cases} \frac{1}{x}+\frac{1}{y}=6, \\ \frac{1}{y}+\frac{1}{z}=10, \\ \frac{1}{z}+\frac{1}{x}=8. \end{cases}$

23. $\begin{cases} \frac{xy}{x+y}=\frac{1}{5}, \\ \frac{yz}{y+z}=\frac{1}{6}, \\ \frac{zx}{z+x}=\frac{1}{7}. \end{cases}$

24. $\begin{cases} x+3y+z=14, \\ x+y+3z=16, \\ 3x+y+z=20. \end{cases}$

25. $\begin{cases} y+z+v-x=22, \\ z+v+x-y=18, \\ v+x+y-z=14, \\ x+y+z-v=10. \end{cases}$

26. $\begin{cases} \frac{1}{x}+\frac{1}{y}-1=0, \\ \frac{1}{y}+\frac{1}{z}+3=0, \\ \frac{1}{z}+\frac{1}{x}-2=0. \end{cases}$

27. $\begin{cases} \frac{xy}{x+y}=\frac{1}{a}, \\ \frac{yz}{y+z}=\frac{1}{b}, \\ \frac{zx}{z+x}=\frac{1}{c}. \end{cases}$

SUGGESTION. — If $\frac{xy}{x+y}=\frac{1}{5}$, $\frac{x+y}{xy}=\frac{5}{1}$; whence, $\frac{1}{y}+\frac{1}{x}=5$.

28. Solve $\begin{cases} \dfrac{a}{x}+\dfrac{b}{y}+\dfrac{c}{z}=a, & (1) \\ bzx-cxy+ayz=bxyz, & (2) \\ \dfrac{a}{x}-\dfrac{b}{y}-\dfrac{c}{z}=c. & (3) \end{cases}$

SOLUTION

(1)+(3), $\qquad \dfrac{2a}{x}=a+c.$

$$\therefore x=\frac{2a}{a+c}. \qquad (4)$$

(2)÷xyz, $\qquad \dfrac{b}{y}-\dfrac{c}{z}+\dfrac{a}{x}=b. \qquad (5)$

(5)−(3), $\qquad \dfrac{2b}{y}=b-c.$

$$\therefore y=\frac{2b}{b-c}.$$

Substituting the values of x and y in (1), and solving,

$$z=\frac{2c}{a-b}.$$

29. $\begin{cases} axy-x-y=0, \\ bzx-z-x=0, \\ cyz-y-z=0. \end{cases}$

30. $\begin{cases} x+y-z=0, \\ x-y=2b, \\ x+z=3a+b. \end{cases}$

31. $\begin{cases} v+x=2a, \\ x+y=2a-z, \\ y+z=a+b, \\ v-z=a+c. \end{cases}$

32. $\begin{cases} y+z-3x=2a, \\ z+x-3y=2b, \\ x+y-3z=2c, \\ 2x+2y+v=0 \end{cases}$

33. $\begin{cases} abxyz+cxy-ayz-bzx=0, \\ bcxyz+ayz-bzx-cxy=0, \\ caxyz+bzx-cxy-ayz=0. \end{cases}$

34. $\begin{cases} x+y+z=a+b+c, \\ x+2y+3z=b+2c, \\ x+3y+4z=b+3c. \end{cases}$

35. $\begin{cases} v+x+y=a+2b+c, \\ x+y+z=3b, \\ y+z+v=a+b, \\ z+v+x=a+3b-c. \end{cases}$

36. $\begin{cases} ax+by+cz=3, \\ x+y=\dfrac{a+b}{ab}, \\ y+z=\dfrac{b+c}{bc}. \end{cases}$

Problems

215. 1. Three men bought grain at the same prices. A paid \$4.80 for 2 bushels of rye, 3 bushels of wheat, and 4 bushels of oats; B paid \$6.40 for 3 bushels of rye, 5 bushels of wheat, and 2 bushels of oats; and C paid \$5.30 for 2 bushels of rye, 4 bushels of wheat, and 3 bushels of oats. What was the price of each?

2. A dealer was asked his price for 10 bushels of wheat, corn, and rye. He replied, "For 5 of wheat, 2 of corn, and 3 of rye, \$6.60; for 2 of wheat, 3 of corn, and 5 of rye, \$5.80; and for 3 of wheat, 5 of corn, and 2 of rye, \$5.60." What prices had he in mind?

3. Divide 90 into three parts such that the sum of $\frac{1}{2}$ of the first, $\frac{1}{3}$ of the second, and $\frac{1}{4}$ of the third shall be 30; and the first shall be twice the third diminished by twice the second.

4. There are three numbers such that the sum of $\frac{1}{2}$ of the first, $\frac{1}{3}$ of the second, and $\frac{1}{4}$ of the third is 12; of $\frac{1}{3}$ of the first, $\frac{1}{4}$ of the second, and $\frac{1}{5}$ of the third is 9, and the sum of the numbers is 38. What are the numbers?

5. There are three numbers whose sum is 72. If the sum of the first two is divided by the third, the quotient is $1\frac{2}{5}$; and if the third is subtracted from twice the first, the remainder will be $\frac{1}{4}$ of the second. Find the numbers.

6. A and B can do a piece of work in 10 days; A and C can do it in 8 days; and B and C can do it in 12 days. How long will it take each to do it alone?

7. A certain number is expressed by three digits whose sum is 14. If 693 is added to the number, the digits will appear in reverse order. If the units' digit is equal to the tens' digit increased by 6, what is the number?

8. The third digit of a number of three digits is as much larger than the second digit as the second is larger than the first. If the number is divided by the sum of its digits, the quotient is 15. What is the number, if the order of its digits may be reversed by adding 396?

9. Find three numbers such that the first increased by $\frac{1}{3}$ of the sum of the other two shall be 36; the second increased by $\frac{1}{4}$ of the sum of the other two shall be 40; and the third increased by $\frac{1}{5}$ of the sum of the other two shall be 44.

10. Divide 800 into three parts such that the sum of the first, $\frac{1}{2}$ of the second, and $\frac{2}{5}$ of the third shall be 400; and the sum of the second, $\frac{3}{4}$ of the first, and $\frac{1}{4}$ of the third shall be 400.

11. Three cities, A, B, and C, connected by straight roads, are situated at the vertices of a triangle. From A to B by way of C is 130 miles; from B to C by way of A is 110 miles; and from C to A by way of B is 140 miles. How far apart are the cities?

12. Find three numbers such that the first with $\frac{1}{5}$ of the sum of the second and third is 340; the second with $\frac{1}{2}$ of the sum of the first and third is 600; and the third with $\frac{1}{2}$ of the remainder when the first is subtracted from the second is 450.

13. A merchant has three kinds of tea. He can sell 2 pounds of the first kind, 3 of the second, and 4 of the third for \$4.70; or 4 of the first, 3 of the second, and 2 of the third for \$4.30. If a pound of the third kind is worth 5 cents more than $\frac{3}{4}$ of a pound of the first kind and $\frac{1}{2}$ of a pound of the second kind, what is the value of 1 pound of each kind?

14. A, B, and C have certain sums of money. If A gives B \$100, they will have the same amount; if A gives C \$100, C will have twice as much as A; and if B gives C \$100, C will have 4 times as much as B. What sum has each?

15. A quantity of water sufficient to fill three jars of different sizes will fill the smallest jar 4 times; the largest jar twice with 4 gallons to spare; or the second jar 3 times with 2 gallons to spare. What is the capacity of each jar?

16. A gave to B and C as much as each of them had; B then gave to A and C as much as each of them had; and C then gave to A and B as much as each of them had, after which each had \$8. How much had each at first?

17. Three boys, A, B, and C, each had a bag of nuts. After each boy had given each of the others $\frac{1}{5}$ of the nuts in his bag, they counted and found that A had 740, B 580, and C 380. How many had each at first?

INVOLUTION

216. 1. How many times is a number used as a factor in producing its second power? its third power? its fourth power? its fifth power? its nth power, when n is a positive integer?

2. What is the meaning of 2^3? of $(-2)^3$? of a^5? of $(ax)^2$? of x^n, when n is a positive integer?

3. What sign has $(+a)^2$? $(+a)^3$? $(+a)^n$, or *any* power of a? What sign has any power of a positive number?

4. What sign has $(-a)^2$? $(-a)^3$? $(-a)^4$? $(-a)^5$?

What sign have the even powers of a negative number? What sign have the odd powers?

5. What is the fourth power of a^2? of a^3? of a^{10}? of a^n, when n is a positive integer? What are the fifth powers of these numbers? the sixth powers? the mth powers, when m is a positive integer?

6. How does 8^2 compare in value with $2^2 \times 4^2$? with $2^2 \times 2^2 \times 2^2$? 3^2 with $6^2 \div 2^2$? 5^2 with $10^2 \div 2^2$?

217. The process of finding any required power of an expression is called **Involution.**

218. Principles. — 1. **Law of Signs.**—*All powers of a positive number are positive; even powers of a negative number are positive, and odd powers are negative.*

2. **Law of Exponents.**—*The exponent of a power of a number is equal to the exponent of the number multiplied by the exponent of the power to which the number is to be raised.*

3. *Any power of a product is equal to the product of its factors each raised to that power.*

4. *Any power of the quotient of two numbers is equal to the quotient of the numbers each raised to that power.*

The above principles may be established as follows:

PRINCIPLE 1 follows directly from the law of signs for multiplication.

PRINCIPLE 2. When m and n are positive integers,

§ 24, $$(a^m)^n = a^m \times a^m \times a^m \cdots \text{ to } n \text{ factors}$$
$$= a^{m+m+m+\cdots \text{ to } n \text{ terms}}$$
$$= a^{mn}.$$

PRINCIPLE 3. When n is a positive integer,

§ 24, $$(ab)^n = ab \times ab \times ab \cdots \text{ to } n \text{ factors}$$

§ 83, $$= (aaa \cdots \text{ to } n \text{ factors})\ (bbb \cdots \text{ to } n \text{ factors})$$
$$= a^n b^n.$$

PRINCIPLE 4. When n is a positive integer,

§ 24, $$\left(\frac{a}{b}\right)^n = \frac{a}{b} \times \frac{a}{b} \times \frac{a}{b} \cdots \text{ to } n \text{ factors}$$

§ 180, $$= \frac{aaa \cdots \text{ to } n \text{ factors}}{bbb \cdots \text{ to } n \text{ factors}}$$
$$= \frac{a^n}{b^n}.$$

219. Involution of monomials.

EXAMPLES

1. What is the third power of $4\,a^3b$?

SOLUTION. $(4\,a^3b)^3 = 4\,a^3b \times 4\,a^3b \times 4\,a^3b = 64\,a^9b^3$.

2. What is the fifth power of $-2\,ab^2$?

SOLUTION. $(-2\,ab^2)^5 = -2\,ab^2 \times -2\,ab^2 \times -2\,ab^2 \times -2\,ab^2 \times -2\,ab^2$
$= -32\,a^5b^{10}$.

To raise an integral term to any power:

RULE. — *Raise the numerical coefficient to the required power and annex to it each letter with an exponent equal to the product of its exponent by the exponent of the required power.*

Prefix the sign + to any power of a positive number or to an even power of a negative number; the sign — to an odd power of a negative number.

To raise a fraction to any power:

RULE. — *Raise both numerator and denominator to the required power and prefix the proper sign to the result.*

Raise to the power indicated:

3. $(ab^2c^3)^2$.
4. $(a^3b^2c)^4$.
5. $(2\,a^2c)^3$.
6. $(7\,a^2m^5)^2$.
7. $(-1)^2$.
8. $(-ab)^2$.
9. $(-3\,c)^3$.
10. $(-10\,x^2)^3$.
11. $(-6\,a^2x^3)^2$.
12. $(-4\,c^2y^5)^3$.
13. $(-2\,l^4m^5d^2)^3$.
14. $(-a^2x^ny^{n-1})^2$.
15. $(abcx)^m$.
16. $(2\,e^2x^e)^6$.
17. $(3\,bc)^n$.
18. $(2\,a^2x^3)^n$.
19. $(-1)^{99}$.
20. $(-1)^{200}$.
21. $(-1)^{2n}$.
22. $(-b)^{2n+1}$.
23. $(-b^2)^{2n+1}$.
24. $(-a^xb^yc^{n-1}d)^2$.
25. $(-a^{2n}y^{3p}z^{4r})^5$.
26. $(-a^{n-1}b^{n-2}c)^3$.

27. What is the square of $-\dfrac{5\,a^3x^2}{7\,b^2c}$?

SOLUTION

$$\left(-\frac{5\,a^3x^2}{7\,b^2c}\right)^2 = -\frac{5\,a^3x^2}{7\,b^2c} \times -\frac{5\,a^3x^2}{7\,b^2c} = +\frac{25\,a^6x^4}{49\,b^4c^2}.$$

Raise to the power indicated:

28. $\left(\dfrac{1}{4\,b}\right)^2$.
29. $\left(\dfrac{2\,x}{7\,y}\right)^2$.
30. $\left(\dfrac{3\,x^2}{10\,y^3}\right)^2$.
31. $\left(\dfrac{2\,x^2}{3\,y}\right)^3$.
32. $\left(\dfrac{a^n}{2\,b^{n-1}}\right)^3$.
33. $\left(-\dfrac{5}{ab}\right)^2$.
34. $\left(-\dfrac{2}{3\,x}\right)^4$.
35. $\left(-\dfrac{3\,x}{2\,y}\right)^3$.
36. $\left(-\dfrac{2\,a}{x^2y}\right)^5$.
37. $\left(-\dfrac{x^ny^n}{a^2}\right)^7$.
38. $\left(-\dfrac{2\,a}{b}\right)^6$.
39. $\left(-\dfrac{b^3c^2}{a^2x}\right)^2$.
40. $\left(\dfrac{a^2b^3}{xy^4}\right)^n$.
41. $\left(\dfrac{a^{n-1}b}{x^{2b}y^a}\right)^n$.
42. $\left(\dfrac{a^{n-1}\,c^n}{x^{n+n-1}}\right)^n$.

220. Involution of polynomials.

§ 91, $(a+b)^2 = a^2 + 2ab + b^2.$

§ 93, $(a-b)^2 = a^2 - 2ab + b^2.$

§ 95, $(a+b+c)^2 = a^2 + b^2 + c^2 + 2ab + 2ac + 2bc.$

Raise the following to the second power:

1. $2a+b.$
2. $2a-b.$
3. $a^m - 3b^n.$
4. $a^2 - 2x^{2n}.$
5. $3x - 4y^3.$
6. $5m^4 - 11.$
7. $1 - 3abc.$
8. $4x^4 + 5.$
9. $a - b + x - y.$
10. $a^m + x^n - y^{n+1}.$
11. $2a + 3b - 4c$
12. $5a^2 - 1 + 4n^3$

Raise to the required power by multiplication:

13. $(x+y)^3.$
14. $(x-y)^3.$
15. $(x+y)^4.$
16. $(x-y)^4.$
17. $(x+y)^5.$
18. $(x-y)^5.$

221. Involution of binomials by the Binomial Theorem.

By multiplication,

$$(a+x)^3 = a^3 + 3a^2x + 3ax^2 + x^3.$$

$$(a-x)^3 = a^3 - 3a^2x + 3ax^2 + x^3.$$

$$(a+x)^4 = a^4 + 4a^3x + 6a^2x^2 + 4ax^3 + x^4.$$

$$(a-x)^4 = a^4 - 4a^3x + 6a^2x^2 - 4ax^3 + x^4.$$

$$(a+x)^5 = a^5 + 5a^4x + 10a^3x^2 + 10a^2x^3 + 5ax^4 + x^5.$$

$$(a-x)^5 = a^5 - 5a^4x + 10a^3x^2 - 10a^2x^3 + 5ax^4 - x^5.$$

Examine carefully the above powers of $(a+x)$ and $(a-x)$.

1. How does the number of terms in a power of a binomial compare with the exponent of the binomial?

2. What terms of the power contain the first term of the binomial? the second term of the binomial? both terms?

3. What is the exponent of the first term of the binomial in the first term of the power? in the second? in the third, etc.?

4. What is the exponent of the second term of the binomial in the second term of the power? in the third? in the fourth, etc.?

5. What is the coefficient of the first term of the power? How does the coefficient of the second term compare with the exponent of the binomial?

6. If the coefficient of any term is multiplied by the exponent of the first term of the binomial found in that term, and the product is divided by the number of the term, how does the quotient compare with the coefficient of the succeeding term?

7. What are the signs of the terms in any power of $(a + b)$? What terms are negative in any power of $(a - b)$?

222. PRINCIPLES. — 1. *The number of terms in a positive integral power of a binomial is one greater than the index of the required power.*

2. *The first term of the power contains only the first term of the binomial; the last term of the power, only the second term of the binomial; all other terms of the power contain as factors both terms of the binomial.*

3. *The exponent of the first term of the binomial in the first term of the power is the same as the index of the required power, and it decreases* 1 *in each succeeding term. The exponent of the second term of the binomial in the second term of the power is* 1, *and it increases* 1 *in each succeeding term.*

4. *The coefficient of the first term of the power is* 1. *The coefficient of the second term is the same as the index of the required power.*

5. *The coefficient of any term may be found by multiplying the coefficient of the preceding term by the exponent of the first term of the binomial found in that term, and then dividing the result by the number of the term.*

6. *If both terms of the binomial are positive, all the terms of any power of the binomial will be positive.*

7. *If the second term of the binomial is negative and the first term positive, the terms of any power of the binomial will be alternately positive and negative.*

Examples

1. Find the fifth power of $(b - y)$ by the binomial theorem.

Solution

Letters and exponents,	b^5	b^4y	b^3y^2	b^2y^3	by^4	y^5
Coefficients,	1	5	10	10	5	1
Signs,	+	−	+	−	+	−
Combined,	$b^5 - 5b^4y + 10b^3y^2 - 10b^2y^3 + 5by^4 - y^5$					

In every term of a power of a binomial the sum of the exponents of the terms of the binomial is equal to the index of the required power.

Expand:

2. $(x + y)^5$.	**13.** $(c - n)^6$.	**24.** $(x - 2)^3$.
3. $(m + n)^5$.	**14.** $(x - a)^7$.	**25.** $(x + r)^7$.
4. $(m - n)^5$.	**15.** $(d - y)^8$.	**26.** $(b - c)^7$.
5. $(a - c)^3$.	**16.** $(b + y)^6$.	**27.** $(p + q)^5$.
6. $(a + b)^3$.	**17.** $(m + n)^4$.	**28.** $(a - b)^5$.
7. $(b + d)^4$.	**18.** $(p - q)^4$.	**29.** $(a + bc)^4$.
8. $(q - r)^5$.	**19.** $(s + t)^3$.	**30.** $(ab - c)^4$.
9. $(c + d)^7$.	**20.** $(x + 2)^3$.	**31.** $(m - pn)^4$.
10. $(x + y)^8$.	**21.** $(a + 3)^3$.	**32.** $(m - an)^4$.
11. $(x - y)^3$.	**22.** $(x + 4)^3$.	**33.** $(ax - by)^3$.
12. $(x - y)^4$.	**23.** $(x + 5)^3$.	**34.** $(ax - by)^5$.

35. Expand $(2b^2 - 3y)^4$.

Solution

Let $2b^2 = a$, and $3y = x$.

Then, $2b^2 - 3y = a - x$,

and $(2b^2 - 3y)^4 = (a - x)^4$

$= a^4 - 4a^3x + 6a^2x^2 - 4ax^3 + x^4$

Restoring values, $= (2b^2)^4 - 4(2b^2)^3(3y) + 6(2b^2)^2(3y)^2 - 4(2b^2)(3y)^3 + (3y)^4$

$= 16b^8 - 96b^6y + 216b^4y^2 - 216b^2y^3 + 81y^4$

36. Expand $(1 + x^2)^3$.

SOLUTION

$$(1 + x^2)^3 = 1^3 + 3(1)^2(x^2) + 3(1)(x^2)^2 + (x^2)^3$$
$$= 1 + 3x^2 + 3x^4 + x^6.$$

Expand:

37. $(x + 2y)^4$.

38. $(2x - y)^3$.

39. $(2x - 5)^3$.

40. $(x^2 - 10)^4$.

41. $(1 - 3x^2)^4$.

42. $(5x^2 - ab)^3$.

43. $(1 + a^2b^2)^4$.

44. $(2ax - b)^5$.

45. $(1 - x)^7$.

46. $(1 - 2x)^6$.

47. $(x - \frac{1}{2})^6$.

48. $(\frac{1}{2}x - \frac{1}{3}y)^4$.

Expand:

49. $\left(2a + \frac{1}{2}\right)^5$.

50. $\left(\frac{x}{y} - \frac{y}{x}\right)^4$.

51. $\left(\frac{x}{y} - \frac{y}{x}\right)^6$.

52. $\left(3a^2 + \frac{b}{6}\right)^3$.

53. $\left(1 + \frac{3x}{2}\right)^5$.

54. $\left(\frac{3}{5} + \frac{5x}{3}\right)^4$.

55. $\left(\frac{1}{2x} - 2x\right)^5$.

56. $\left(\frac{1}{a} - a\right)^6$.

57. $\left(x + \frac{1}{x}\right)^7$.

58. Expand $(a - b - c)^3$.

SOLUTION

$(a-b-c)^3 = (\overline{a-b}-c)^3$, a binomial form.

$(\overline{a-b}-c)^3 = (a-b)^3 - 3(a-b)^2c + 3(a-b)c^2 - c^3$
$= a^3 - 3a^2b + 3ab^2 - b^3 - 3c(a^2 - 2ab + b^2) + 3ac^2 - 3bc^2 - c^3$
$= a^3 - 3a^2b + 3ab^2 - b^3 - 3a^2c + 6abc - 3b^2c + 3ac^2 - 3bc^2 - c^3.$

59. Expand $(a + b - c - d)^3$.

SUGGESTION. $(a + b - c - d)^3 = (\overline{a+b} - \overline{c+d})^3$, a binomial form.

Expand:

60. $(a + x - y)^3$.

61. $(a - m - n)^3$.

62. $(a - x + y)^3$.

63. $(a - x - y)^3$.

64. $(a + x + 2)^3$.

65. $(a - x - 2)^3$.

66. $(a + 2b - 3c)^3$.

67. $(a + b + x + y)^3$.

68. $(a + b - x - y)^3$.

69. $(a - b + x - y)^3$.

70. $(a - b - x + y)^3$.

71. $(a - b - x - y)^3$.

EVOLUTION

223. 1. Of what two equal numbers is 16 the product? What is the square root of 16? Since 16 is equal also to -4×-4, what other square root may 16 have? What is the square root of 25? of 64? What is the fourth root of 16? of 81?

2. What is the sign of an *even* root of a *positive* number?

3. Can the square root of -16 be found? of -25? of -64? the fourth root of -16? of -81? Can an even root of any negative number be found?

4. What is the cube root of 8? of 27? of 64? of -8? of -27? of -64? What is the fifth root of 32? of -32?

5. How does the sign of an *odd* root of a number compare with the sign of the number?

6. Since $a^6 = a^2 \times a^2 \times a^2$, what power of a^2 is a^6? What is the cube root of a^6? of a^9? of a^{12}? How is the exponent of a in the cube, or third, root of any power of a found? What is the fourth root of a^8? of a^{12}?

7. How is the exponent of a root of a power obtained from the index of the power and the index of the root?

8. How does $\sqrt{4 \times 25}$ compare in value with $\sqrt{4} \times \sqrt{25}$? $\sqrt{4 \times 9}$ with $\sqrt{4} \times \sqrt{9}$? $\sqrt[3]{8 \times 1000}$ with $\sqrt[3]{8} \times \sqrt[3]{1000}$? In each case how does the root of the product compare in value with the product of the roots of the factors?

9. How does $\sqrt{100 \div 4}$ compare in value with $\sqrt{100} \div \sqrt{4}$? $\sqrt{36 \div 9}$ with $\sqrt{36} \div \sqrt{9}$? $\sqrt[3]{64 \div 8}$ with $\sqrt[3]{64} \div \sqrt[3]{8}$? In each case how does the root of the quotient compare in value with the quotient of the roots of the dividend and the divisor?

224. The process of finding any required root of an expression is called **Evolution.**

225. Since the product of two numbers having like signs is positive, *every positive number has two square roots, numerically equal, but with opposite signs.* It will be seen later that every number has two square roots, three cube roots, four fourth roots, five fifth roots, and, in general, q qth roots. Of these roots the positive roots of positive numbers and the negative odd roots of negative numbers are called **Principal Roots.**

$\sqrt{25} = +5$ or -5, and $+5$ is the principal square root. $\sqrt[4]{16} = +2$ or -2 or, as will be seen later, $+\sqrt{-4}$ or $-\sqrt{-4}$, but $+2$ is the principal root. The principal cube root of 8 is $+2$ and of -8 is -2.

226. A number that is or can be expressed as an integer or as a fraction with integral terms is called a **Rational Number.**

a, 3, $5\frac{1}{2}$, $a^2 + b^2$, $\sqrt{25}$, and $.33\dot{3}$ are rational numbers.

A number that cannot be expressed as an integer or as a fraction with integral terms is called an **Irrational Number.**

When the indicated root of a number cannot be exactly obtained, the root is irrational.

The indicated roots $\sqrt{2}$, $\sqrt[3]{4}$, $\sqrt{a^2 + b^2}$, $\sqrt[3]{x^2}$, $\sqrt[4]{x^5}$, and, in general, the qth root of a number that is not the qth power of some rational number, are irrational numbers.

227. A rational arithmetical number is called a **Commensurable Number**, and an irrational arithmetical number is called an **Incommensurable Number.**

2, $\frac{3}{4}$, .54, and $.66\dot{6}$ are commensurable, but $\sqrt{2}$ is incommensurable.

In algebra, commensurable and incommensurable numbers may be either positive or negative.

The terms rational and irrational applied to algebraic numbers relate to their forms, while the terms commensurable and incommensurable relate to their arithmetical values.

$3a$, $a + b$, $x - 3$, x^3, are rational but not necessarily commensurable. For a may represent $\sqrt{2}$, b may represent $\sqrt[3]{5}$, etc. Again, $\sqrt{x}$ is irrational, but if $x = 16$, $\sqrt{x}$ is commensurable.

Incommensurable numbers obey the Commutative, Associative, and Distributive Laws, but the proof is too complicated to be given here.

228. Since the nth power of a number is the product of n equal factors, and since one of these factors is a root of the power, it follows that $(\sqrt[n]{a})^n = a$, and if the principal root is meant, $\sqrt[n]{a^n} = a$, when n is a positive integer.

In the statement of the following principles and in Ax. 7 the term root means principal root.

229. PRINCIPLES. — 1. **Law of Signs.** — *An odd root of a number has the same sign as the number; an even root of a positive number is positive; an even root of a negative number is impossible, or imaginary.*

2. **Law of Exponents.** — *The exponent of any root of a number is equal to the exponent of the given number divided by the index of the root.*

3. *Any root of a product is equal to the product of that root of each of the factors.*

4. *Any root of the quotient of two numbers is equal to the quotient of that root of each of the numbers.*

Even roots of negative numbers will be discussed later.

The above principles may be established as follows:

PRINCIPLE 1 follows from the Law of Signs for multiplication.

PRINCIPLE 2. When m and n are positive integers,

§ 218, Prin. 2, $$a^{mn} = (a^m)^n.$$

Taking the nth root, § 228, $$\sqrt[n]{a^{mn}} = a^m;$$

$$\therefore \sqrt[n]{a^{mn}} = a^{mn \div n} = a^m.$$

Thus, $$\sqrt[5]{a^{10}} = a^2.$$

PRINCIPLE 3. When n is a positive integer,

§ 228, § 218, Prin. 3, $$ab = (\sqrt[n]{a})^n \times (\sqrt[n]{b})^n = (\sqrt[n]{a} \times \sqrt[n]{b})^n.$$

Taking the nth root, $$\sqrt[n]{ab} = \sqrt[n]{a} \times \sqrt[n]{b}.$$

Thus, $$\sqrt[3]{27\,a^9} = \sqrt[3]{27} \times \sqrt[3]{a^9} = 3\,a^3.$$

PRINCIPLE 4. When n is a positive integer,

§ 228, § 218, Prin. 4, $$\frac{a}{b} = \frac{(\sqrt[n]{a})^n}{(\sqrt[n]{b})^n} = \left(\frac{\sqrt[n]{a}}{\sqrt[n]{b}}\right)^n.$$

Taking the nth root, $$\sqrt[n]{\frac{a}{b}} = \frac{\sqrt[n]{a}}{\sqrt[n]{b}}.$$

230. Evolution of monomials.

EXAMPLES

1. What is the square root of $36\,a^6b^2$?

SOLUTION. — Since, in squaring a monomial, § 218, the coefficient is squared and the exponents of the letters are multiplied by 2, to extract the square root, the square root of the coefficient must be found, and to it must be annexed the letters each with its exponent divided by 2.

The square root of 36 is 6, and the square root of the literal factors is a^3b. Therefore, the *principal* square root of $36\,a^6b^2$ is $6\,a^3b$.

The square root may also be $-6\,a^3b$, since $-6\,a^3b \times -6\,a^3b = 36\,a^6b^2$.

$$\therefore \sqrt{36\,a^6b^2} = \pm 6\,a^3b.$$

2. What is the cube root of $-125\,x^6y^{21}$?

SOLUTION. $\sqrt[3]{-125\,x^6y^{21}} = -5\,x^2y^7$.

To find the root of an integral term:

RULE. — *Extract the required root of the numerical coefficient, annex to it the letters each with its exponent divided by the index of the root sought, and prefix the proper sign to the result.*

To find the root of a fractional term:

RULE. — *Find the required root of both numerator and denominator and prefix the proper sign to the resulting fraction.*

Find the indicated root:

3. $\sqrt[3]{a^3b^9c^{15}}$.

4. $\sqrt{a^6b^{16}c^{14}}$.

5. $\sqrt[5]{a^{10}x^5y^{30}}$.

6. $\sqrt[4]{a^{4n}b^8c^{12}}$.

7. $\sqrt{x^{4n}y^8z^{2m}}$.

8. $\sqrt[3]{-8\,a^6b^{15}}$.

9. $\sqrt[5]{-32\,x^{10}y^{10}}$.

10. $\sqrt{16\,x^4y^2}$.

11. $\sqrt[7]{-a^{21}b^{35}x^{14}}$.

12. $\sqrt[5]{-243\,y^{5n}}$.

13. $\sqrt[4]{16\,m^4n^8}$.

14. $\sqrt[7]{\dfrac{(x-y)^{14}}{128\,x^{14}}}$.

15. $\sqrt[5]{\dfrac{-32\,a^5x^{10}}{243\,y^{15}}}$.

16. $\sqrt[8]{\dfrac{256\,x^8}{6561}}$.

17. $\sqrt[3]{-\dfrac{125\,x^{12}y^{12}}{1728\,c^3}}$.

18. $\sqrt[2n]{\dfrac{a^{2n^2-2n}b^{4n}}{x^{4n}y^{2n}}}$.

19. $\sqrt[n]{\dfrac{b^{4n}c^nx^{3n}}{2^n\,x^{2n}y^{3n}}}$.

231. To extract the square root of a polynomial.

1. Since $a^2 + 2\,ab + b^2$ is the square of $(a + b)$, what is the square root of $a^2 + 2\,ab + b^2$?

2. How may the first term of the square root be found from $a^2 + 2\,ab + b^2$?

3. How may the second term of the square root be found from $2\,ab$, the second term of the power?

4. What are the factors of $a^2 + 2\,ab + b^2$?

5. Since $2\,ab + b^2$ is equal to $b(2\,a + b)$, what are the factors of the last two terms of the square of a binomial?

6. By what divisor, then, must the last two terms of $a^2 + 2\,ab + b^2$ be divided so that the quotient may be the second term of the square root?

EXAMPLES

1. Find the process for extracting the square root of $a^2 + 2\,ab + b^2$.

PROCESS

$$a^2 + 2\,ab + b^2 \mid a + b$$
$$a^2$$

Trial divisor, $2\,a$	$2\,ab + b^2$
Complete divisor, $2\,a + b$	$2\,ab + b^2$

EXPLANATION. — Since $a^2 + 2\,ab + b^2$ is the square of $(a + b)$, we know that the square root of $a^2 + 2\,ab + b^2$ is $a + b$.

Since the first term of the root is a, it may be found by taking the square root of a^2, the first term of the power. Subtracting a^2, there is a remainder of $2\,ab + b^2$.

The second term of the root is known to be b, and that may be found by dividing the first term of the remainder by twice the part of the root already found. This divisor is called a *trial* divisor.

Since $2\,ab + b^2$ is equal to $b(2\,a + b)$, the complete divisor which multiplied by b produces the remainder $2\,ab + b^2$ is $2\,a + b$; that is, the complete divisor is found by adding the second term of the root to twice the root already found.

Multiplying the complete divisor by the second term of the root and subtracting, there is no remainder, consequently, $a + b$ is the required root.

2. Find the square root of $9x^2 - 30xy + 25y^2$.

PROCESS

$$
\begin{array}{rl|l}
 & 9x^2 - 30xy + 25y^2 & 3x - 5y \\
 & 9x^2 & \\
\hline
6x & -30xy + 25y^2 & \\
6x - 5y & -30xy + 25y^2 & \\
\hline
\end{array}
$$

Since, in squaring $a + b + c$, $a + b$ may be represented by x, and the square of the number by $x^2 + 2xc + c^2$, it is obvious that the square root of a number whose root consists of *more than two terms* may be extracted in the same way as in Example 1, by *considering the terms already found as one term.*

3. Find the square root of $4x^4 + 12x^3 - 3x^2 - 18x + 9$.

PROCESS

$$
\begin{array}{rl|l}
 & 4x^4 + 12x^3 - 3x^2 - 18x + 9 & 2x^2 + 3x - 3 \\
 & 4x^4 & \\
\hline
4x^2 & 12x^3 - 3x^2 & \\
4x^2 + 3x & 12x^3 + 9x^2 & \\
\hline
4x^2 + 6x & -12x^2 - 18x + 9 & \\
4x^2 + 6x - 3 & -12x^2 - 18x + 9 & \\
\hline
\end{array}
$$

EXPLANATION. — Proceeding as in the previous example, the first two terms of the root are found to be $2x^2 + 3x$.

Considering $(2x^2 + 3x)$ as the first term of the root, the next term of the root is found as the second term of a root is found, by dividing the remainder by twice the part of the root already found. Hence, the trial divisor is $4x^2 + 6x$, and the next term of the root is -3. Annexing this, as before, to the trial divisor already found, the entire divisor is $2x^2 + 3x - 3$. This multiplied by -3 and the product subtracted from $-12x^2 - 18x + 9$, leaves no remainder. Hence, the square root of the number is $2x^2 + 3x - 3$.

RULE. — *Arrange the terms of the polynomial with reference to the consecutive powers of some letter.*

Extract the square root of the first term, write the result as the first term of the root, and subtract its square from the given polynomial.

Divide the first term of the remainder by twice the root already found, as a trial divisor, and the quotient will be the next term of the root. Write this result in the root, and annex it to the trial divisor to form the complete divisor.

Multiply the complete divisor by this term of the root, and subtract the product from the first remainder.

Find the next term of the root by dividing the first term of the remainder by the first term of the trial divisor.

Form the complete divisor as before and continue in this manner until all the terms of the root are found.

Find the square root of the following:

4. $4x^2 + 12x + 9$.
5. $4x^2 + 20x + 25$.
6. $25x^2 + 40x + 16$.
7. $x^2 + xy + \frac{1}{4}y^2$.
8. $4x^2 - 52x + 169$.
9. $(a+b)^2 - 4(a+b) + 4$.
10. $x^6 + 4x^5 + 2x^4 + 9x^2 - 4x + 4$.
11. $9x^4 - 12x^3 + 10x^2 - 4x + 1$.
12. $x^4 - 6x^3y + 13x^2y^2 - 12xy^3 + 4y^4$.
13. $x^8 + 2a^6x^2 - a^4x^4 - 2a^2x^6 + a^8$.
14. $25x^4 + 4 - 12x - 30x^3 + 29x^2$.
15. $1 + 6x + 15x^2 + 20x^3 + 15x^4 + 6x^5 + x^6$.
16. $1 - 2x + 3x^2 - 4x^3 + 3x^4 - 2x^5 + x^6$.
17. $a^4 - 2a^2b + 2a^2c^2 - 2bc^2 + b^2 + c^4$.
18. $4a^2 - 12ab + 16ac + 9b^2 + 16c^2 - 24bc$.
19. $9x^2 + 25y^2 + 9z^2 - 30xy + 18xz - 30yz$.
20. $x^2 + 2x - 1 - \frac{2}{x} + \frac{1}{x^2}$.
21. $x^4 + x^3 + \frac{13x^2}{20} + \frac{x}{5} + \frac{1}{25}$.
22. $\frac{a^4}{4} + a^3x + \frac{4a^2x^2}{3} + \frac{2ax^3}{3} + \frac{x^4}{9}$.
23. $x^8 + 4x^7 - 2x^6 - 20x^5 - 3x^4 + 32x^3 + 4x^2 - 16x + 4$.

24. Find four terms of the square root of $1 + x$.

SOLUTION

$$
\begin{array}{r|l}
1+x & 1+\frac{1}{2}x-\frac{1}{8}x^2+\frac{1}{16}x^3 \\
\hline
1 & \\
\hline
2+\frac{1}{2}x & x \\
 & x+\frac{1}{4}x^2 \\
\hline
 & -\frac{1}{4}x^2 \\
2+x-\frac{1}{8}x^2 & -\frac{1}{4}x^2-\frac{1}{8}x^3+\frac{1}{64}x^4 \\
\hline
2+x-\frac{1}{4}x^2+\frac{1}{16}x^3 & \frac{1}{8}x^3-\frac{1}{64}x^4
\end{array}
$$

Find the square root of the following to four terms:

25. $1-a$.	**27.** x^2-1.	**29.** y^2+3.
26. a^2+1.	**28.** $4-a$.	**30.** a^2+2b.

SQUARE ROOT OF ARITHMETICAL NUMBERS

$1^2=1$	$10^2=100$	$100^2=10000$
$9^2=81$	$99^2=9801$	$999^2=998001$

232. 1. How many figures are required to express the square of a number expressed by 1 figure? 2 figures? 3 figures? 4 figures?

2. How does the number of figures in the square of a number compare with the number of figures in the number?

3. How many figures are there in the square root of a number that is expressed by 4 figures? by 3 figures? by 5 figures? by 6 figures? by 7 figures?

4. How, then, may the number of figures in the square root of a given number be found?

PRINCIPLES. — 1. *The square of a number is expressed by twice as many figures as there are in the number itself, or by one less than twice as many.*

2. *The orders of units in the square root of a number correspond to the number of periods of two figures each into which the number can be separated, beginning at units.*

233. If the number of units expressed by the tens' digit is represented by t and the number of units expressed by the units' digit by u, the square of a number consisting of tens and units will be represented by $(t + u)^2$, or $t^2 + 2\,tu + u^2$.

Thus, $25 = 2$ tens $+ 5$ units, or $20 + 5$ units,

and $25^2 = 20^2 + 2(20 \times 5) + 5^2 = 625$.

Examples

1. What is the square root of 2809?

FIRST PROCESS

	28·09	50 + 3
$t^2 =$	25 00	
	3 09	
$2\,t = 100$		
$u = 3$		
$2\,t + u = 103$	3 09	

Explanation. — According to Prin. 2, § 231, the orders of units in the square root of a number may be determined by separating the number into periods of two figures each, beginning at units. Separating 2809 thus, there are found to be two orders of units in the root; that is, it is composed of tens and units.

Since the square of tens is hundreds, and the hundreds of the power are less than 36, or 6^2, and more than 25, or 5^2, the tens' figure of the root must be 5. 5 tens, or 50, squared is 2500, and 2500 subtracted from 2809 leaves 309, which is equal to 2 times the tens $\times$ the units + the units^2.

Since two times the tens multiplied by the units is much greater than the square of the units, 309 is a little more than 2 times the tens multiplied by the units. Therefore, if 309 is divided by 2 times the tens, or 100, the *trial divisor*, the units are found to be 3. And since the complete divisor is found by adding the units to twice the tens, the complete divisor is 100 + 3, or 103. This multiplied by 3 gives as a product 309, which subtracted from 309 leaves no remainder. Therefore, the square root of 2809 is 53.

SECOND PROCESS

	28·09	53
$t^2 =$	25	
$2\,t = 100$	309	
$u = 3$		
$2\,t + u = 103$	309	

Explanation. — In practice it is usual to place the figures of the same order in a column, and to disregard the ciphers on the right of the products.

Since any number may be regarded as composed of tens and units, the processes given above have a general application.

Thus, 346 = 34 tens + 6 units; 2377 = 237 tens + 7 units.

2. Find the square root of 104976.

SOLUTION

		10·49·76 | 324
		9
Trial divisor	$= 2 \times 30 = 60$	1 49
Complete divisor	$= 60 + 2 = 62$	1 24
Trial divisor	$= 2 \times 320 = 640$	25 76
Complete divisor	$= 640 + 4 = 644$	25 76

RULE. — *Separate the number into periods of two figures each, beginning at units.*

Find the greatest square in the left-hand period and write its root for the first figure of the required root.

Square this root, subtract the result from the left-hand period, and annex to the remainder the next period for a new dividend.

Double the root already found, with a cipher annexed, for a trial divisor, and by it divide the dividend. The quotient or the quotient diminished will be the second figure of the root. Add to the trial divisor the figure last found, multiply this complete divisor by the figure of the root found, subtract the product from the dividend, and to the remainder annex the next period for the next dividend.

Proceed in this manner until all the periods have been used. The result will be the square root sought.

1. When the number is not a perfect square, annex periods of decimal ciphers and continue the process.

2. Decimals are pointed off from the decimal point toward the right.

3. The square root of a fraction may be found by extracting the square root of both numerator and denominator separately or by reducing it to a decimal and then extracting its root.

Extract the square root of the following:

3. 529.	**9.** 57121.	**15.** 125316.
4. 2209.	**10.** 42025.	**16.** 455625.
5. 4761.	**11.** 95481.	**17.** 992016.
6. 7921.	**12.** 186624.	**18.** 2480.04.
7. 17424.	**13.** 165649.	**19.** 10.9561.
8. 19321.	**14.** 134689.	**20.** .001225.

21. 10201.	24. 1332.25.	27. 540.5625.
22. 95481.	25. 101.0025.	28. 1.018081.
23. 363609.	26. 111.0916.	29. 13003236.

30. $\frac{625}{729}$.	32. $\frac{169}{225}$.	34. $\frac{289}{324}$.	36. $\frac{576}{784}$.
31. $\frac{576}{841}$.	33. $\frac{196}{1156}$.	35. $\frac{361}{400}$.	37. $\frac{289}{961}$.

Extract the square root to four decimal places:

38. $\frac{3}{4}$.	40. $\frac{5}{8}$.	42. $\frac{5}{6}$.	44. $\frac{7}{8}$.
39. $\frac{4}{5}$.	41. .6.	43. $\frac{2}{9}$.	45. $\frac{5}{16}$.

234. To extract the cube root of a polynomial.

1. Since $a^3 + 3a^2b + 3ab^2 + b^3$ is the cube of $(a + b)$, what is the cube root of $a^3 + 3a^2b + 3ab^2 + b^3$?

2. How may the first term of the root be found from $a^3 + 3a^2b + 3ab^2 + b^3$?

3. How may the second term of the root be found from the second term of the power, $3a^2b$?

4. What are the factors of $3a^2b + 3ab^2 + b^3$?

5. Since $3a^2b + 3ab^2 + b^3$ is equal to $b(3a^2 + 3ab + b^2)$, by what number must the last three terms of $a^3 + 3a^2b + 3ab^2 + b^3$ be divided so that the quotient may be the second term of the cube root?

EXAMPLES

1. Find the process for extracting the cube root of $a^3 + 3a^2b + 3ab^2 + b^3$.

PROCESS

$a^3 + 3a^2b + 3ab^2 + b^3 \mid a + b$

a^3

Trial divisor, $3a^2$ | $3a^2b + 3ab^2 + b^3$

Complete divisor, $3a^2 + 3ab + b^2$ | $3a^2b + 3ab^2 + b^3$

EXPLANATION. — Since $a^3 + 3a^2b + 3ab^2 + b^3$ is the cube of $(a + b)$, we know that the cube root of $a^3 + 3a^2b + 3ab^2 + b^3$ is $a + b$.

Since the first term of the root is a, it may be found by taking the cube root of a^3, the first term of the power. Subtracting, there is a remainder of $3a^2b + 3ab^2 + b^3$.

The second term of the root is known to be b, and that may be found by dividing the first term of the remainder by 3 times the square of the part of the root already found. This divisor is called a *trial* divisor.

Since $3a^2b + 3ab^2 + b^3$ is equal to $b(3a^2 + 3ab + b^2)$, the complete divisor, which multiplied by b produces the remainder $3a^2b + 3ab^2 + b^3$, is $3a^2 + 3ab + b^2$; that is, the complete divisor is found by adding to the trial divisor 3 times the product of the first and second terms of the root and the square of the second term of the root.

Multiplying the complete divisor by the second term of the root, and subtracting, there is no remainder; consequently, $a + b$ is the required root.

Since, in cubing $a + b + c$, $a + b$ may be expressed by x, its cube will be $x^3 + 3x^2c + 3xc^2 + c^3$. Hence, it is obvious that the cube root of an expression whose root consists of *more than two terms* may be extracted in the same way as in example 1, *by considering the terms already found as one term.*

2. Find the cube root of $b^6 - 3b^5 + 5b^3 - 3b - 1$.

PROCESS

$b^6 - 3b^5 + 5b^3 - 3b - 1 \mid b^2 - b - 1$

b^6

Trial divisor,	$3b^4$	$-3b^5+5b^3$
Complete divisor,	$3b^4-3b^3+b^2$	$-3b^5+3b^4-b^3$
Trial divisor,	$3b^4-6b^3+3b^2$	$-3b^4+6b^3-3b-1$
Complete divisor,	$3b^4-6b^3+3b+1$	$-3b^4+6b^3-3b-1$

Explanation. — The first two terms are found in the same manner as in the previous example. In finding the next term, $b^2 - b$ is considered as one term, which we square and multiply by 3 for a trial divisor. Dividing the remainder by this trial divisor, the next term of the root is found to be -1. Adding to the trial divisor 3 times $(b^2 - b)$ multiplied by -1, and the square of -1, we obtain the complete divisor. This multiplied by -1, and the product subtracted from $-3b^4 + 6b^3 - 3b - 1$, leaves no remainder. Hence, the cube root of the polynomial is $b^2 - b - 1$.

Rule. — *Arrange the polynomial with reference to the consecutive powers of some letter.*

Extract the cube root of the first term, write the result as the first term of the root, and subtract its cube from the given polynomial.

Divide the first term of the remainder by 3 times the square of the root already found, as a trial divisor, and the quotient will be the next term of the root.

Add to this trial divisor 3 times the product of the first and second terms of the root, and the square of the second term. The result will be the complete divisor.

Multiply the complete divisor by the last term of the root found, and subtract this product from the dividend.

Find the next term of the root by dividing the first term of the remainder by the first term of the trial divisor.

Form the complete divisor as before, and continue in this manner until all the terms of the root are found.

Find the cube root of

3. $x^3 - 3x^2y + 3xy^2 - y^3$.

4. $m^3 - 9m^2 + 27m - 27$.

5. $8m^3 - 60m^2n + 150mn^2 - 125n^3$.

6. $27x^3 - 189x^2y + 441xy^2 - 343y^3$.

7. $125a^3 + 675a^2x + 1215ax^2 + 729x^3$.

8. $1000p^6 - 300p^4q + 30p^2q^2 - q^3$.

9. $m^6 + 6m^5 + 15m^4 + 20m^3 + 15m^2 + 6m + 1$.

10. $x^6 - 6x^5 + 15x^4 - 20x^3 + 15x^2 - 6x + 1$.

11. $x^6 + 3x^5 + 9x^4 + 13x^3 + 18x^2 + 12x + 8$.

12. $x^6 + 12x^5 + 63x^4 + 184x^3 + 315x^2 + 300x + 125$.

13. $x^6 + 6x^5 - 18x^4 - 1000 + 180x^2 - 112x^3 + 600x$.

14. $x^3 - 12x^2 + 54x - 112 + \frac{108}{x} - \frac{48}{x^2} + \frac{8}{x^3}$.

15. $1 - 6a + 21a^2 - 44a^3 + 63a^4 - 54a^5 + 27a^6$.

16. $64 - 144p + 156p^2 - 99p^3 + 39p^4 - 9p^5 + p^6$.

17. $\frac{a^3b^3x^9}{c^3} - \frac{c^3x^6}{b^3} + \frac{3acx^7}{b} - \frac{3a^2bx^8}{c}$.

18. $x^6 + 15x^2 + \frac{15}{x^2} + 20 + \frac{6}{x^4} + \frac{1}{x^6} + 6x^4$.

CUBE ROOT OF ARITHMETICAL NUMBERS

$1^3 = 1.$	$10^3 = 1000.$	$100^3 = 1000000.$
$3^3 = 27.$	$30^3 = 27000.$	$300^3 = 27000000.$
$9^3 = 729.$	$99^3 = 970299.$	$999^3 = 997002999.$

235. 1. How many figures are there in the cubes of numbers that have 1 figure? 2 figures? 3 figures? 4 figures?

2. What places, then, belong to the cube of units? of tens? of hundreds? of thousands?

3. How many figures are there in the cube root of a number expressed by 4 figures? 5 figures? 6 figures? 7 figures?

4. How may the number of figures in the cube root of a number be found?

PRINCIPLES. — 1. *The cube of a number is expressed by three times as many figures as the number itself, or by one or two less than three times as many.*

2. *The orders of units in the cube root of a number correspond to the number of periods of three figures each, into which the number can be separated, beginning at units.*

236. If the number of units expressed by the tens' digit is represented by t, and the number of units expressed by the units' digit by u, the cube of a number consisting of tens and units will be represented by $(t + u)^3$, or $t^3 + 3t^2u + 3tu^2 + u^3$.

Thus, $25 = 2$ tens $+ 5$ units, or $20 + 5$ units,

and $25^3 = 20^3 + 3(20^2 \times 5) + 3(20 \times 5^2) + 5^3 = 15625.$

EXAMPLES

1. What is the cube root of 12167?

FIRST PROCESS

$12{\cdot}167 \mid 20 + 3$

	$t^3 =$	8 000
Trial divisor,	$3t^2 = 1200$	4 167
	$3tu = 180$	
	$u^2 = 9$	
Complete divisor,	$= 1389$	4 167

EXPLANATION. — By Prin. 2, § 235, the orders of units may be determined by separating the number into periods of three figures each, beginning at units. Separating 12167 thus, there are found to be two orders of units in the root; that is, the root is composed of tens and units.

Since the cube of tens is thousands, and the thousands of the power are less than 27, or 3^3, and more than 8, or 2^3, the tens' figure of the root is 2. 2 tens, or 20, cubed is 8000, and 8000 subtracted from 12167 leaves 4167, which is equal to 3 times the tens^2 $\times$ the units + 3 times the tens $\times$ the units^2 + the units^3.

Since 3 times the tens^2 $\times$ the units is much greater than 3 times the tens $\times$ the units^2, 4167 is a little more than 3 times the tens^2 $\times$ the units. If, then, 4167 is divided by 3 times the tens^2, or by 1200, the trial divisor, the quotient 3 will be the units of the root, provided proper allowance has been made for the additions necessary to obtain the complete divisor.

Since the complete divisor is found by adding to 3 times the tens^2 3 times the tens $\times$ the units and the units^2, the complete divisor is 1200 + 180 + 9, or 1389. This multiplied by 3 gives 4167, which subtracted from 4167 leaves no remainder. Therefore, the cube root of 12167 is 20 + 3, or 23.

SECOND PROCESS

	12·167 | 23
$t^3 =$	8
$3t^2 = 1200$	4 167
$3tu = 180$	
$u^2 = 9$	
1389	4 167

EXPLANATION. — In practice it is usual to place figures of the same order in a column, and to disregard the ciphers on the right of the products.

2. What is the cube root of 1740992427?

SOLUTION

			1·740·992·427 | 1203
	$t^3 =$	1	
Complete divisor	$3t^2 = 3(10)^2$	= 300	740
	$3tu = 3(10 \times 2)$	= 60	
	$u^2 = 2^2$	= 4	
		364	728
			12992
	$3t^2 = 3(120)^2$	= 43200	
Complete divisor	$3t^2 = 3(1200)^2$	= 4320000	12992427
	$3tu = 3(1200 \times 3)$	= 10800	
	$u^2 = 3^2$	= 9	
		4330809	12992427

Since a root expressed by any number of figures may be regarded as composed of tens and units, the processes of example 1 have a general application. Thus, 120 = 12 tens + 0 units; and 1203 = 120 tens + 3 units.

Since the third figure of the root is 0, it is not necessary to form the complete divisor, inasmuch as the product to be subtracted will be 0.

RULE. — *Separate the numbers into periods of three figures each, beginning at units.*

Find the greatest cube in the left-hand period, and write its root for the first term of the required root. Cube the root, subtract the result from the left-hand period, and annex to the remainder the next period for a new dividend.

Take 3 times the square of the root already found, with two ciphers annexed, for a trial divisor, and by it divide the dividend. The quotient, or quotient diminished, will be the second figure of the root.

To this trial divisor add 3 times the product of the first part of the root with a cipher annexed, multiplied by the second part, and also the square of the second part. Their sum will be the complete divisor.

Multiply the complete divisor by the second part of the root, and subtract the product from the dividend.

Continue thus until all the figures of the root have been found.

1. When there is a remainder after subtracting the last product, annex decimal ciphers, and continue the process.

2. Decimals are pointed off from the decimal point toward the right.

3. The cube root of a common fraction may be found by extracting the cube root of both numerator and denominator separately, or by reducing it to a decimal and then extracting its root.

Extract the cube root of

3. 29791.	**9.** 2406104.	**15.** .000024389.
4. 54872.	**10.** 69426531.	**16.** .001906624.
5. 110592.	**11.** 28372625.	**17.** .000912673.
6. 300763.	**12.** 48.228544.	**18.** .259694072.
7. 681472.	**13.** 17173.512.	**19.** 926.859375.
8. 941192.	**14.** 95.443993.	**20.** 514500.058197

Extract the cube root to three decimal places:

21. 2.	**23.** .8.	**25.** $\frac{5}{64}$.	**27.** $\frac{7}{8}$.
22. 5.	**24.** .16.	**26.** $\frac{2}{3}$.	**28.** $\frac{3}{16}$.

237. To extract any root of a polynomial.

To find a formula for obtaining the complete divisor in extracting the *fourth, fifth, sixth,* or any required root of a polynomial, raise $(a + b)$ to the required power, and separate all the terms after the first into two factors one of which shall be the second term of the root. The other factor will be the formula for the complete divisor.

$$(a + b)^5 = a^5 + 5a^4b + 10a^3b^2 + 10a^2b^3 + 5ab^4 + b^5.$$

Trial divisor, $5a^4$.

Complete divisor, $5a^4 + 10a^3b + 10a^2b^2 + 5ab^3 + b^4$.

$$(a + b)^7 = a^7 + 7a^6b + 21a^5b^2 + 35a^4b^3 + 35a^3b^4 + 21a^2b^5 + 7ab^6 + b^7.$$

Trial divisor, $7a^6$.

Complete divisor, $7a^6 + 21a^5b + 35a^4b^2 + 35a^3b^3 + 21a^2b^4 + 7ab^5 + b^6$.

Since the *fourth* power is the *square* of the *second* power, the *sixth* power the *cube* of the *second* power, etc., any root whose index is 4, 6, 8, 9, etc., may be found by extracting successively the roots corresponding to the factors of the index.

The fourth root may be obtained by extracting the square root of the square root; the sixth root, by extracting the cube root of the square root, or the square root of the cube root; the eighth root, by extracting the square root of the square root of the square root.

Examples

1. Find the fourth root of $16 - 32x + 24x^2 - 8x^3 + x^4$.
2. Find the fourth root of $x^4 + 12x^3y + 54x^2y^2 + 108xy^3 + 81y^4$.
3. Find the fourth root of $16m^4 - 32m^3 + 24m^2 - 8m + 1$.
4. Find the fifth root of $32x^5 + 80x^4 + 80x^3 + 40x^2 + 10x + 1$.
5. Find the fifth root of $a^{10} + 15a^8 + 90a^6 + 270a^4 + 405a^2 + 243$.
6. Find the sixth root of $x^6 - 12x^5 + 60x^4 - 160x^3 + 240x^2 - 192x + 64$.
7. Find the sixth root of $64x^6 - 576x^5 + 2160x^4 - 4320x^3 + 4860x^2 - 2916x + 729$.
8. Find the sixth root of $x^6 + 6acx^5 + 15a^2c^2x^4 + 20a^3c^3x^3 + 15a^4c^4x^2 + 6a^5c^5x + a^6c^6$.

238. To extract any root of an arithmetical number.

EXAMPLES

1. Find the cube root of 42875.

SOLUTION

By factoring, $42875 = 5 \times 5 \times 5 \times 7 \times 7 \times 7.$

$\therefore$ §§ 26, 229, Prin. 3, $\sqrt[3]{42875} = 5 \times 7 = 35.$

Find, by factoring, the roots indicated:

2. $\sqrt[3]{3375}$.
4. $\sqrt[6]{531441}$.
6. $\sqrt[5]{4084101}$.
3. $\sqrt[4]{1296}$.
5. $\sqrt[5]{759375}$.
7. $\sqrt[6]{262144}$.

8. Find the sixth root of 1771561.

SOLUTION. — The square root of 1771561 is 1331.

The cube root of 1331 is 11.

$\therefore$ § 237, $\sqrt[6]{1771561} = 11.$

Find the roots indicated:

9. $\sqrt[4]{50625}$.
11. $\sqrt[6]{531441}$.
13. $\sqrt[6]{24137569}$.
10. $\sqrt[6]{46656}$.
12. $\sqrt[8]{5764801}$.
14. $\sqrt[9]{10604499373}$.

239. Factoring by evolution.

EXAMPLES

1. Factor $x^4 + 4x^3 + 8x^2 + 8x - 5$.

SOLUTION. — Extracting the square root as far as possible, the root obtained is $x^2 + 2x + 2$ with a remainder of -9.

Therefore, $x^4 + 4x^3 + 8x^2 + 8x - 5$

$= (x^2 + 2x + 2)^2 - 9$

§ 128, $= (x^2 + 2x + 2 + 3)(x^2 + 2x + 2 - 3)$

$= (x^2 + 2x + 5)(x^2 + 2x - 1).$

Factor the following polynomials:

2. $x^4 + 6x^3 + 11x^2 + 6x - 8$.
3. $x^6 + 2x^5 + 5x^4 + 8x^3 + 8x^2 + 8x + 3$.
4. $x^6 - 4x^5 + 6x^4 + 6x^3 - 19x^2 + 10x + 9$.
5. $4x^6 + 12x^5 + 25x^4 + 40x^3 + 40x^2 + 32x + 15$.

THEORY OF EXPONENTS

240. Thus far the exponents used have been *positive integers* only, and consequently the laws relating to exponents have been obtained in the following restricted forms:

1. $a^m \times a^n = a^{m+n}$ when m and n are positive integers.

2. $a^m \div a^n = a^{m-n}$ when m and n are positive integers and $m > n$.

3. $(a^m)^n = a^{mn}$ when m and n are positive integers.

4. $\sqrt[n]{a^m} = a^{m \div n}$ when m and n are positive integers, and m is a multiple of n.

5. $(ab)^n = a^n b^n$ when n is a positive integer.

If all restrictions are removed from m and n, we may then have expressions like a^{-2} and $a^{\frac{3}{5}}$. But such expressions are, as yet, unintelligible, because -2 and $\frac{3}{5}$ cannot show how many times a number is used as a factor.

Since, however, these forms may occur in algebraic processes, it is important to discover meanings for them that will allow their use in accordance with the laws already established, for otherwise great complexity and confusion would arise in the processes involving them.

Assuming that the law of exponents for multiplication,

$$a^m \times a^n = a^{m+n}, \qquad \text{(I)}$$

is true for *all* values of m and n, the meanings of zero, negative, and fractional exponents may be readily discovered.

Then, having verified the remaining laws of exponents for these exponents, all the laws will have been shown to be of general application for all commensurable exponents.

241. The meaning of a zero exponent.

1. What is the exponent of a in the product of $a^3 \times a^2$? of $a^3 \times a^1$? of $a^3 \times a^0$, if the law of exponents for multiplication is true for *all* values of m and n?

2. Since $a^3 \times a^0 = a^3$, what is the value of a^0? What is the value of x^0? of b^0? of y^0? of m^0?

3. What, then, is the value of the zero power of any number?

242. PRINCIPLE. — *Any number with a zero exponent is equal to* 1.

The above principle may be established as follows:

It is to be proved that $a^0 = 1$.

Since Law I is to be true for all values of m and n, § 240, when $n = 0$,

$$a^m \times a^0 = a^{m+0} = a^m.$$

Dividing by a^m, $$a^0 = \frac{a^m}{a^m} = 1.$$

243. The meaning of a negative exponent.

1. What is the exponent of a in the product of $a^4 \times a^2$? of $a^4 \times a$? of $a^4 \times a^0$? of $a^4 \times a^{-1}$, if the law of exponents for multiplication is true for all values of m and n? of $a^4 \times a^{-2}$?

2. Since $a^4 \times a^{-1} = a^3$ and since $a^4 \times \frac{1}{a} = a^3$, to what fraction is a^{-1} equal? Since $a^4 \times a^{-2} = a^2$, to what fraction is a^{-2} equal?

3. What is another expression for a^{-5}? for x^{-3}? for y^{-4}?

4. What is the equivalent of any number with a negative exponent?

5. Since $a^{-2} = \frac{1}{a^2}$, to what is $a^{-2}b$ equal? $\frac{a^{-3}b}{c}$?

6. Since $\frac{1}{a^{-2}} = 1 \div \frac{1}{a^2}$, or a^2, to what is $\frac{1}{a^{-2}} \times \frac{b}{c}$, or $\frac{b}{a^{-2}c}$, equal?

7. Without changing the value of the fraction, transfer a from the numerator to the denominator in $\frac{a^{-3}b}{c}$; in $\frac{a^2b}{c}$; from the denominator to the numerator in $\frac{b}{a^{-2}c}$; in $\frac{b}{a^3c}$.

8. How may a factor be transferred from one term of a fraction to the other without changing the value of the fraction?

244. PRINCIPLES. — 1. *Any number with a negative exponent is equal to the reciprocal of the same number with a numerically equal positive exponent.*

2. *Any factor may be transferred from one term of a fraction to the other, without changing the value of the fraction, if the sign of the exponent is changed.*

The above principles may be established as follows:

PRINCIPLE 1. It is to be proved that $a^{-n} = \frac{1}{a^n}$.

Since § 240, Law I, $a^m \times a^n = a^{m+n}$, is to hold for all values of m and n, when $m = -n$, $a^{-n} \times a^n = a^{-n+n} = a^0$;

but, § 242, $a^0 = 1$;

∴ Ax. 1, $a^{-n} \times a^n = 1$.

Dividing by a^n, $a^{-n} = \frac{1}{a^n}$.

PRINCIPLE 2. It is to be proved that $\frac{a^{-m}}{b^{-n}} = \frac{b^n}{a^m}$.

By Prin. 1, $a^{-m} = \frac{1}{a^m}$ and $b^{-n} = \frac{1}{b^n}$.

Therefore, $$\frac{a^{-m}}{b^{-n}} = \frac{\frac{1}{a^m}}{\frac{1}{b^n}} = \frac{1}{a^m} \times \frac{b^n}{1} = \frac{b^n}{a^m}.$$

EXAMPLES

Write the following with negative exponents:

1. $1 \div a$.
2. $1 \div a^2$.
3. $1 \div a^n$.
4. $a \div x^3$.
5. $c \div a^2x^3$.
6. $am^3 \div bx^n$.

7. Write $5x^{-3}y^2$ with positive exponents.

SOLUTION. — Prin. 1, $5x^{-3}y^2 = 5y^2\frac{1}{x^3} = \frac{5y^2}{x^3}$.

Write the following with positive exponents:

8. $2x^{-1}$.
9. $5a^{-5}$.
10. $3b^{-2}$.
11. $a^{-1}b^{-1}$.
12. $x^{-3}y^{-2}$.
13. $a^{-1}b^2c^{-3}$.
14. $4a^2c^{-2}$.
15. $3ax^{-2}$.
16. a^nb^{-3n}.

17. Write $\frac{3\,a^2}{x^2}$ without a denominator.

SOLUTION. — Prin. 2, $\frac{3\,a^2}{x^2} = 3\,a^2x^{-2}$.

Write the following without denominators:

18. $\frac{ax}{by}$.

19. $\frac{mn}{a^2}$.

20. $\frac{c^2d^2}{a^2b^2}$.

21. $\frac{a^2m^3}{b^3n^2}$.

22. $\frac{b}{x^{-6}}$.

23. $\frac{1}{a^{-2}b^2}$.

24. $\frac{1}{m^{-3}n}$.

25. $\frac{3\,a^2c^{-2}}{x^2}$.

26. $\frac{4}{x^{-4}}$.

27. $\frac{x^{-1}}{y}$.

28. $\left(\frac{x}{y}\right)^2$.

29. $\left(\frac{3}{m}\right)^3$.

30. $\left(\frac{a}{b}\right)^3$.

31. $\frac{a^{-3}}{b^{-3}}$.

32. $\frac{1}{(ab)^3}$.

245. The meaning of a fractional exponent.

1. What is the cube root of a^6? How is its exponent obtained? Express the root with this division indicated.

2. In $a^{\frac{6}{3}}$ what does 6 express with reference to a? What does 3 express with reference to a^6?

3. What is the fifth root of b^{15}? Express the root with a fractional exponent.

4. In $b^{\frac{15}{5}}$ what does 15 express with reference to b? What does 5 express with reference to b^{15}?

5. Express the cube root of a with a fractional exponent; the fourth root of a^5; the third root of the seventh power of a.

6. What does the numerator of a fractional exponent indicate? What, the denominator?

7. Since $a^{\frac{6}{3}} \times a^{\frac{6}{3}} \times a^{\frac{6}{3}} = a^6$, if the law of exponents for multiplication holds true for all values of m and n, of what is $a^{\frac{6}{3}}$ the cube root?

Since $a^{\frac{1}{3}} \times a^{\frac{1}{3}} \times a^{\frac{1}{3}} \times a^{\frac{1}{3}} \times a^{\frac{1}{3}} \times a^{\frac{1}{3}} = a^{\frac{6}{3}}$, of what is $a^{\frac{6}{3}}$ the sixth power? What two meanings may $a^{\frac{6}{3}}$ have? $a^{\frac{5}{2}}$? $a^{\frac{3}{4}}$?

8. What does a fractional exponent indicate?

246. PRINCIPLES. — 1. *The numerator of a positive fractional exponent indicates a power and the denominator a root.*

2. *A positive fractional exponent indicates a root of a power or a power of a root.*

Prin. 2 refers to principal roots only (§ 225).

The above principles may be established as follows:

Let p and q be any positive integers, and a any positive number.

Since $\frac{-p}{-q} = \frac{p}{q}$, $\frac{p}{q}$ may represent any positive fraction.

1. It is to be proved that in $a^{\frac{p}{q}}$, p indicates a power and q a root.

Since Law I, or $a^m \times a^n = a^{m+n}$, is to hold for all values of m and n,

when $$m = n = \frac{p}{q},$$

$$a^{\frac{p}{q}} \times a^{\frac{p}{q}} = a^{\frac{p}{q}+\frac{p}{q}} = a^{\frac{2p}{q}},$$

also $$a^{\frac{p}{q}} \times a^{\frac{p}{q}} \times a^{\frac{p}{q}} = a^{\frac{2p}{q}} \times a^{\frac{p}{q}} = a^{\frac{3p}{q}}, \text{ etc.}$$

Hence, $a^{\frac{p}{q}} \times a^{\frac{p}{q}} \times a^{\frac{p}{q}} \cdots$ to q factors $= a^{\frac{qp}{q}} = a^p$.

Taking the qth root, § 26 and Ax. 7,

$$a^{\frac{p}{q}} = \sqrt[q]{a^p}.$$

Hence, in $a^{\frac{p}{q}}$, *p indicates a power and q a root, and $a^{\frac{p}{q}}$ indicates the* qth *root of the* pth *power of* a.

2. It is to be proved that $a^{\frac{p}{q}} = \sqrt[q]{a^p}$, or $(\sqrt[q]{a})^p$.

By the previous proof, $$a^{\frac{p}{q}} = \sqrt[q]{a^p}. \tag{1}$$

If $p = 1$, $$a^{\frac{1}{q}} = \sqrt[q]{a}.$$

Raising to the pth power,

$$a^{\frac{1}{q}} \times a^{\frac{1}{q}} \times a^{\frac{1}{q}} \cdots \text{ to } p \text{ factors} = (\sqrt[q]{a})^p,$$

or, Law I, $$a^{\frac{p}{q}} = (\sqrt[q]{a})^p. \tag{2}$$

Hence, (1) and (2), $a^{\frac{p}{q}}$ *indicates the* qth *root of the* pth *power of* a, or *the* pth *power of the* qth *root of* a.

It follows from § 244 that $a^{-\frac{p}{q}} = \frac{1}{a^{\frac{p}{q}}}$.

Examples

1. Express $\sqrt[3]{a^2bc^{-4}}$ with positive fractional exponents.

Solution. $\sqrt[3]{a^2bc^{-4}} = a^{\frac{2}{3}}b^{\frac{1}{3}}c^{-\frac{4}{3}} = \dfrac{a^{\frac{2}{3}}b^{\frac{1}{3}}}{c^{\frac{4}{3}}}$.

Express with positive fractional exponents:

2. $\sqrt{ab^3}$.
3. $\sqrt{xy}$.
4. $\sqrt{x^3y^5}$.
5. $(\sqrt{x})^3$.
6. $(\sqrt[5]{y})^4$.
7. $(\sqrt[5]{ab})^3$.
8. $(\sqrt[3]{xy})^{-2}$.
9. $5\sqrt{x^{-1}y^{-1}}$.
10. $2\sqrt[3]{(a+b)^2}$.

In the following, large numbers may be avoided by extracting the root first.

Find the value of

11. $8^{\frac{1}{3}}$.
12. $8^{\frac{2}{3}}$.
13. $8^{-\frac{1}{3}}$.
14. $(-8)^{\frac{1}{3}}$.
15. $64^{\frac{2}{3}}$.
16. $32^{\frac{3}{5}}$.
17. $25^{\frac{3}{2}}$.
18. $81^{\frac{3}{4}}$.
19. $64^{-\frac{2}{3}}$.
20. $(-8)^{-\frac{4}{3}}$.
21. $(-32)^{-\frac{3}{5}}$.
22. $16^{-\frac{3}{4}}$.

Simplify:

23. $\sqrt[3]{x^2} + x^{\frac{1}{3}} + 8^{\frac{2}{3}} + 3x^{\frac{2}{3}} - 5\sqrt[3]{x} - \sqrt[3]{27^2}$.
24. $4\sqrt[5]{x} + 5x^0 - 3x^{-\frac{1}{5}} + 2\sqrt[5]{x^{-1}} - 8^{\frac{2}{3}} - 2x^{\frac{1}{5}}$.
25. $\sqrt[3]{a^2} - \sqrt[3]{a^2b} + \sqrt[3]{ab^2} - b + a + 4\sqrt[3]{a^2b} - 4a^{\frac{1}{3}}b^{\frac{2}{3}} + \sqrt[3]{b^3}$.

Express with radical signs:

26. $a^{\frac{2}{3}}$.
27. $x^{\frac{4}{5}}$.
28. $x^{\frac{5}{4}}$.
29. $a^{\frac{1}{3}}b^{\frac{2}{3}}$.
30. $x^{\frac{5}{6}}y^{\frac{1}{6}}$.
31. $a^{\frac{1}{4}}b^{-\frac{3}{4}}$.
32. $a^{\frac{1}{2}} \div x^{\frac{1}{2}}$.
33. $m^{\frac{1}{2}} \div n^{\frac{3}{2}}$.
34. $x^{\frac{2}{3}} \div y^{\frac{4}{3}}$.

247. It now remains to complete the proof that the other laws of exponents are of general application for commensurable exponents by showing that they apply when negative and fractional exponents are employed with the meanings just obtained.

248. To prove that the law of exponents for division is general.

It is to be proved that $a^m \div a^n = a^{m-n}$ for all values of m and n.

Since dividing by a^n is equivalent to multiplying by its reciprocal $\frac{1}{a^n}$,

§ 106, $$a^m \div a^n = a^m \times \frac{1}{a^n}$$

§ 244, Prin. 2, $$= a^m \times a^{-n}.$$

Hence, for all values of m and n, $a^m \div a^n = a^{m-n}$. (II)

249. To prove that the law of exponents for involution is general.

It is to be proved that $(a^m)^n = a^{mn}$ for all values of m and n.

CASE 1. — Let m represent any value and n a positive integer.

Then, $$(a^m)^n = a^m \times a^m \times a^m \cdots \text{to } n \text{ factors.}$$

Law I, $$= a^{m+m+m \ldots \text{ to } n \text{ terms}}$$

$$= a^{mn}.$$

CASE 2. — Let m represent any value, and let $n = \frac{p}{q}$, p and q being positive integers.

Then, § 246, Prin. 2, $$(a^m)^{\frac{p}{q}} = \sqrt[q]{(a^m)^p}$$

Case 1, $$= \sqrt[q]{a^{mp}}$$

§ 246, Prin. 1, $$= a^{\frac{mp}{q}}.$$

CASE 3. — Let m represent any value, and let $n = -r$, r being a positive integer or a positive fraction.

Then, $$(a^m)^{-r} = \frac{1}{(a^m)^r}$$

Case 1, $$= \frac{1}{a^{mr}}$$

§ 244, Prin. 2, $$= a^{-mr}.$$

Hence, for all values of m and n, $(a^m)^n = a^{mn}$. (III)

250. To prove that the law of exponents for evolution is general.

It is to be proved that $\sqrt[n]{a^m} = a^{m \div n}$ for all values of m and n.

Since $(a^m)^n = a^{mn}$ for all values of m and n, it is true when $\frac{1}{n}$ is substituted for n.

Substituting $\frac{1}{n}$ for n, $$(a^m)^{\frac{1}{n}} = a^{m \times \frac{1}{n}},$$

or, § 246, $$\sqrt[n]{a^m} = a^{m \div n}.$$ (IV)

251. To prove $(ab)^n = a^n b^n$ for all values of n.

CASE 1. — Let $n = \frac{p}{q}$, p and q being positive integers.

Then, § 249, Case 1, since q is a positive integer,

$$[(ab)^{\frac{p}{q}}]^q = (ab)^{\frac{p}{q}\times q} = (ab)^p$$

§ 240, 5, $$= a^p b^p. \qquad (1)$$

Also, § 249, Case 1,

$$(a^{\frac{p}{q}} b^{\frac{p}{q}})^q = a^{\frac{p}{q}} b^{\frac{p}{q}} \times a^{\frac{p}{q}} b^{\frac{p}{q}} \cdots \text{to } q \text{ factors}$$

§ 83, $$= (a^{\frac{p}{q}} \times a^{\frac{p}{q}} \cdots \text{to } q \text{ factors})(b^{\frac{p}{q}} \times b^{\frac{p}{q}} \cdots \text{to } q \text{ factors})$$

$$= a^p b^p. \qquad (2)$$

(1) and (2), Ax. 1, $$[(ab)^{\frac{p}{q}}]^q = (a^{\frac{p}{q}} b^{\frac{p}{q}})^q.$$

Taking the qth root, $$(ab)^{\frac{p}{q}} = a^{\frac{p}{q}} b^{\frac{p}{q}}.$$

CASE 2. — Let $n = -r$, r being a positive integer or a positive fraction.

Then, § 244, Prin. 1, $$(ab)^{-r} = \frac{1}{(ab)^r}$$

Case 1, $$= \frac{1}{a^r b^r}$$

§ 244, Prin. 2, $$= a^{-r} b^{-r}.$$

Hence, for all values of n, $(ab)^n = a^n b^n$. **(V)**

EXAMPLES

252. Multiply:

1. a^3 by a^{-2}.
2. a^2 by a^{-1}.
3. a^4 by a^{-4}.
4. a by a^{-3}.
5. a^2 by a^0.
6. $x^{\frac{1}{2}}$ by $x^{\frac{1}{2}}$.
7. $a^{\frac{1}{2}} b^{\frac{1}{3}}$ by $a^{\frac{1}{2}} b^{\frac{2}{3}}$.
8. $m^{\frac{2}{3}} n$ by $m^{\frac{3}{5}} n^{-1}$.
9. $a^{\frac{1}{3}} b^{\frac{1}{4}}$ by $a^{-\frac{4}{3}} b^{\frac{3}{4}}$.
10. n^{-2} by $an^{\frac{5}{2}}$.
11. a^{m-n} by a^{n-p}.
12. $a^{\frac{m+n}{2}}$ by $a^{\frac{m-n}{2}}$.
13. Multiply $x^{\frac{4}{5}} y^{-\frac{1}{5}} + x^{\frac{3}{5}} + x^{\frac{2}{5}} y^{\frac{1}{5}} + x^{\frac{1}{5}} y^{\frac{2}{5}} + y^{\frac{3}{5}}$ by $x^{\frac{1}{5}} y^{\frac{1}{5}}$.
14. Multiply $y^n + x^{-1} y^{n-1} + x^{-2} y^{n+2} + x^{-3} y^{n+3}$ by $x^n y^{-n}$.

15. Expand $(a^{\frac{1}{5}}b^{-\frac{1}{2}} + 1 + a^{-\frac{1}{5}}b^{\frac{1}{2}})(a^{\frac{1}{5}}b^{-\frac{1}{2}} - 1 + a^{-\frac{1}{5}}b^{\frac{1}{2}})$.

First Solution

$$\begin{array}{l} a^{\frac{1}{5}}b^{-\frac{1}{2}} + \quad 1 \quad + a^{-\frac{1}{5}}b^{\frac{1}{2}} \\ a^{\frac{1}{5}}b^{-\frac{1}{2}} - \quad 1 \quad + a^{-\frac{1}{5}}b^{\frac{1}{2}} \\ \hline a^{\frac{2}{5}}b^{-1} + a^{\frac{1}{5}}b^{-\frac{1}{2}} + a^0b^0 \\ \qquad - a^{\frac{1}{5}}b^{-\frac{1}{2}} - \quad 1 \quad - a^{-\frac{1}{5}}b^{\frac{1}{2}} \\ \qquad\qquad + a^0b^0 + a^{-\frac{1}{5}}b^{\frac{1}{2}} + a^{-\frac{2}{5}}b \\ \hline a^{\frac{2}{5}}b^{-1} \qquad + \quad 1 \qquad + a^{-\frac{2}{5}}b \end{array}$$

Second Solution

$$\begin{aligned} &(a^{\frac{1}{5}}b^{-\frac{1}{2}} + 1 + a^{-\frac{1}{5}}b^{\frac{1}{2}})(a^{\frac{1}{5}}b^{-\frac{1}{2}} - 1 + a^{-\frac{1}{5}}b^{\frac{1}{2}}) \\ &= (a^{\frac{1}{5}}b^{-\frac{1}{2}} + a^{-\frac{1}{5}}b^{\frac{1}{2}})^2 - 1^2 \\ &= a^{\frac{2}{5}}b^{-1} + 2\,a^0b^0 + a^{-\frac{2}{5}}b - 1 \\ &= a^{\frac{2}{5}}b^{-1} + 2 + a^{-\frac{2}{5}}b - 1 \\ &= a^{\frac{2}{5}}b^{-1} + 1 + a^{-\frac{2}{5}}b. \end{aligned}$$

Expand:

16. $(a^{\frac{1}{2}}+b^{\frac{1}{2}})(a^{\frac{1}{2}}-b^{\frac{1}{2}})$.

17. $(x^{\frac{2}{3}}+y^{\frac{2}{3}})(x^{\frac{2}{3}}-y^{\frac{2}{3}})$.

18. $(x^{-\frac{1}{2}}+10)(x^{-\frac{1}{2}}-1)$.

19. $(x^{\frac{2}{5}}-4)(x^{\frac{2}{5}}+5)$.

20. $(x^{\frac{2}{3}}-y^{\frac{2}{3}})(x^{\frac{1}{3}}+y^{\frac{1}{3}})$.

21. $(x^{\frac{2}{5}}-x^{\frac{1}{5}}y^{-\frac{1}{5}}+y^{-\frac{2}{5}})(x^{\frac{1}{5}}+y^{-\frac{1}{5}})$.

22. $(a^{\frac{2}{3}}-b^{-\frac{2}{3}}+a^{\frac{1}{3}}b^{-\frac{1}{3}}+1)(a^{\frac{1}{3}}-b^{\frac{1}{3}})$.

23. $(1-x+x^2)(x^{-3}+x^{-2}+x^{-1})$.

24. $(a^{-1}+b^{-\frac{1}{2}}+c^{\frac{1}{2}})(a^{-1}+b^{-\frac{1}{2}}+2\,c^{\frac{1}{2}})$.

25. $(a^2b^2-ab^3+b^4)(a^{-2}b^{-2}+a^{-3}b^{-1}+a^{-4})$.

Divide:

26. a^5 by a^6.

27. a^3 by a^0.

28. a^2 by a^{-2}.

29. $x^{\frac{5}{2}}$ by $x^{-\frac{1}{2}}$.

30. $x^{\frac{1}{2}}$ by $x^{\frac{1}{3}}$.

31. $x^{n-\frac{3}{2}}$ by x^{n-2}.

32. Divide $x^4 + x^2y^2 + y^4$ by x^2y^2.

33. Divide $a^{-4} + a^{-2}b + b^2$ by $a^{-2}b$.

34. Divide $x^4 + 2\,ax^3 + 3\,a^2x^2 + a^3x - a^4$ by a^4x^4.

35. Divide $b^{-1} + 3\,a^{-\frac{1}{2}} - 10\,a^{-1}b$ by $a^{\frac{1}{2}}b^{-1} - 2$.

SOLUTION

$$a^{\frac{1}{2}}b^{-1} - 2)b^{-1} + 3\,a^{-\frac{1}{2}} - 10\,a^{-1}b(a^{-\frac{1}{2}} + 5\,a^{-1}b$$

$$b^{-1} - 2\,a^{-\frac{1}{2}}$$

$$5\,a^{-\frac{1}{2}} - 10\,a^{-1}b$$

$$5\,a^{-\frac{1}{2}} - 10\,a^{-1}b$$

Divide:

36. $a - b$ by $a^{\frac{1}{2}} + b^{\frac{1}{2}}$.

37. $a - b$ by $a^{\frac{1}{3}} - b^{\frac{1}{3}}$.

38. $a + b$ by $a^{\frac{1}{5}} + b^{\frac{1}{5}}$.

39. $a^2 + b^2$ by $a^{\frac{2}{3}} + b^{\frac{2}{3}}$.

40. $x - 1$ by $x^{\frac{2}{3}} + x^{\frac{1}{3}} + 1$.

41. $a^{\frac{2}{5}} + 2\,a^{\frac{1}{5}}b^{-\frac{1}{2}} + b^{-1}$ by $a^{\frac{1}{5}} + b^{-\frac{1}{2}}$.

42. $x^{\frac{4}{7}} - 2 + x^{-\frac{4}{7}}$ by $x^{\frac{2}{7}} - x^{-\frac{2}{7}}$.

43. $3 - 4\,x^{-1} + x^{-2}$ by $x^{-1} - 3$.

44. $4\,x^2y^{-1} - 5\,y + x^{-2}y^3$ by $x^2 - y^2$.

45. $a^2 - b^3$ by $a^{\frac{1}{3}} + b^{\frac{1}{3}}$.

Simplify the following:

46. $(a^{\frac{1}{2}})^2$.

47. $(a^{-\frac{1}{3}})^6$.

48. $(a^{-4})^{\frac{1}{2}}$.

49. $(-a^{\frac{1}{2}})^3$.

50. $(-a^2)^4$.

51. $(-a^{\frac{4}{5}})^{-1}$.

52. $(8^{-\frac{1}{3}})^4$.

53. $(16^{-\frac{1}{2}})^3$.

54. $(-\frac{1}{32})^{-\frac{3}{5}}$.

Expand by the binomial formula:

55. $(a^{\frac{1}{2}} - b^{\frac{1}{2}})^3$.

56. $(a^{\frac{1}{2}} + b^{\frac{1}{3}})^3$.

57. $(a^{-1} - b^{\frac{2}{3}})^3$.

58. $(x^{-\frac{1}{2}} - y^{\frac{1}{2}})^4$.

59. $(a^{-\frac{1}{2}} + \frac{1}{2})^3$.

60. $(1 - x^{\frac{3}{2}})^4$.

Simplify the following:

61. $\sqrt[4]{x^{\frac{2}{3}}}$.

62. $\sqrt[4]{a^{-\frac{1}{2}}}$.

63. $\sqrt[4]{a^{-\frac{4}{3}}}$.

64. $\sqrt[3]{a^{-\frac{1}{2}}b^{-3}}$.

65. $\sqrt{x^{\frac{4}{3}}y^{-3}}$.

66. $\sqrt[n]{a^xb^y}$.

67. $(\frac{1}{36}\,a^{-\frac{2}{3}}b^{\frac{1}{3}})^{-\frac{3}{2}}$.

68. $(\frac{1}{9}\,m^{-1}n^{-\frac{1}{2}})^{\frac{1}{2}}$.

69. $(4\,x^{2n}y^{-3}z^4)^{\frac{5}{2}}$.

Extract the square root of

70. $x^2 + 2\,x^{\frac{3}{2}} + 3\,x + 4\,x^{\frac{1}{2}} + 3 + 2\,x^{-\frac{1}{2}} + x^{-1}$.

71. $x^2 + y + 4\,z^{-2} - 2\,xy^{\frac{1}{2}} + 4\,xz^{-1} - 4\,y^{\frac{1}{2}}z^{-1}$.

72. $a + 4\,b^{\frac{2}{3}} + 9\,c^{\frac{1}{2}} - 4\,a^{\frac{1}{2}}b^{\frac{1}{3}} + 6\,a^{\frac{1}{2}}c^{\frac{1}{4}} - 12\,b^{\frac{1}{3}}c^{\frac{1}{4}}$.

Extract the cube root of

73. $a^2 + 6\,a^{\frac{4}{3}} + 12\,a^{\frac{2}{3}} + 8.$

74. $a - 3\,a^{\frac{2}{3}}b^{\frac{2}{3}} + 3\,a^{\frac{1}{3}}b^{\frac{4}{3}} - b^2.$

75. $8\,x^{-1} - 12\,x^{-\frac{2}{3}}y + 6\,x^{-\frac{1}{3}}y^2 - y^3.$

76. $x^{\frac{3}{2}} - 6\,x + 15\,x^{\frac{1}{2}} - 20 + 15\,x^{-\frac{1}{2}} - 6\,x^{-1} + x^{-\frac{3}{2}}.$

77. Factor $4\,x^{-2} - 9\,y^{-2}$, and express the result with positive exponents.

SOLUTION

§ 128, $4\,x^{-2} - 9\,y^{-2} = (2\,x^{-1} + 3\,y^{-1})(2\,x^{-1} - 3\,y^{-1})$

$$= \left(\frac{2}{x} + \frac{3}{y}\right)\left(\frac{2}{x} - \frac{3}{y}\right).$$

Factor the following and express the results with positive exponents:

78. $a^{-2} - b^{-2}.$

79. $9 - x^{-2}.$

80. $16 - a^{-4}.$

81. $27 - b^{-3}.$

82. $b^{-3} + y^{-3}.$

83. $x^3 - x^{-3}.$

84. $a^2 + 2 + a^{-2}.$

85. $b^4 - 8 + 16\,b^{-4}.$

86. $12 - x^{-1} - x^{-2}.$

87. $2 - 3\,x^{-1} - 2\,x^{-2}.$

Solve the following equations:

88. $x^{\frac{1}{3}} = 2.$

89. $x^{\frac{3}{4}} = 8.$

90. $x^{\frac{2}{5}} = 4.$

91. $x^{\frac{4}{3}} = 16.$

92. $\frac{1}{3}\,x^{\frac{3}{2}} = 9.$

93. $x^{-\frac{1}{2}} = 5.$

94. $\frac{1}{4}\,x^{\frac{2}{3}} = 25.$

95. $2\,x^{-\frac{3}{2}} = \frac{1}{32}.$

96. $x^{-\frac{1}{2}} = 6.$

97. $x^{-\frac{2}{3}} = 16.$

98. $25\,x^{-\frac{2}{3}} = 1.$

99. $x^{\frac{5}{2}} = 243.$

100. $x^{\frac{5}{3}} + 32 = 0.$

101. $x^{\frac{3}{4}} + a^6 = 0.$

102. $x^{\frac{6}{5}} - 64 = 0.$

103. $x^{-\frac{3}{2}} + 27 = 0.$

RADICALS

253. 1. What is indicated by $\sqrt{x}$? by $x^{\frac{1}{2}}$? by $\sqrt[3]{a}$? by $a^{\frac{1}{3}}$?

2. Indicate in two ways the square root of 25; of 36; of 2; of 3.

3. Which of these indicated roots can be obtained exactly? Which cannot be obtained exactly?

254. An indicated root of an expression is called a **Radical.**

The root may be indicated by a *radical sign* or by a *fractional exponent.*

$\sqrt{5a}$, $(5a)^{\frac{1}{4}}$, $\sqrt[3]{ax^6}$, $(ax^6)^{\frac{1}{3}}$, $\sqrt{a^2+2ab+b^2}$, and $(a^2+2ab+b^2)^{\frac{1}{2}}$ are radicals.

In the discussion and treatment of radicals only principal roots will be considered.

255. The **Degree** of a radical is indicated by the index of the root or by the denominator of the fractional exponent.

$\sqrt{a+x}$ and $(b+x)^{\frac{1}{2}}$ are radicals of the second degree.

256. When the indicated root of a *rational* number cannot be exactly obtained, the expression is called a **Surd.**

$\sqrt{2}$ is a surd, since 2 is rational but has no rational square root.

$\sqrt{1+\sqrt{3}}$ is not a surd, because $1+\sqrt{3}$ is not rational.

Radicals may be either rational or irrational, but surds are always irrational.

Both $\sqrt{4}$ and $\sqrt{3}$ are radicals but only $\sqrt{3}$ is a surd.

257. An indicated even root of a negative number is called an **Imaginary Number;** as $\sqrt{-4}$, $\sqrt{-a}$.

All other numbers, whether rational or irrational, are called *Real Numbers;* as $\sqrt{25}$, $\sqrt{3}$, $a^{\frac{1}{5}}$, 4.

258. A surd may contain a *rational factor*, that is, a factor which is a perfect power of the same degree as the radical. The rational factor may be removed and written as the coefficient of the irrational factor.

In $\sqrt{8} = \sqrt{4 \times 2}$ and $\sqrt[3]{54} = \sqrt[3]{27 \times 2}$, the rational factors are $\sqrt{4}$ and $\sqrt[3]{27}$; that is, $\sqrt{8} = 2\sqrt{2}$ and $\sqrt[3]{54} = 3\sqrt[3]{2}$.

259. A surd that has a rational coefficient is called a **Mixed Surd.**

$2\sqrt{2}$, $a\sqrt[3]{x^2}$, and $(a - b)\sqrt{a + b}$ are mixed surds.

260. A surd that has no rational coefficient except unity is called an **Entire Surd.**

$\sqrt{5}$, $\sqrt[3]{11}$, and $\sqrt{a^2 + x^2}$ are entire surds.

261. A radical is in its **simplest form** when the expression under the radical sign is integral, contains no factor that is a power of the same degree as the radical, and is not itself a perfect power whose exponent is a factor of the index of the radical.

$\sqrt{7}$ is in its simplest form; but $\sqrt{\frac{2}{4}}$ is not in its simplest form, because $\frac{2}{4}$ is not integral in form; $\sqrt{8}$ is not in its simplest form, because the square root of 4, a factor of 8, may be extracted; $\sqrt[6]{25}$, or $25^{\frac{1}{6}}$, is not in its simplest form, because $25^{\frac{1}{6}} = (5^2)^{\frac{1}{6}} = 5^{\frac{2}{6}} = 5^{\frac{1}{3}}$, or $\sqrt[3]{5}$.

REDUCTION OF RADICALS

262. To reduce a radical to its simplest form when it has a rational factor.

EXAMPLES

1. Reduce $\sqrt{20\,a^6}$ to its simplest form.

PROCESS

$$\sqrt{20\,a^6} = \sqrt{4\,a^6 \times 5} = \sqrt{4\,a^6} \times \sqrt{5} = 2\,a^3\sqrt{5}$$

EXPLANATION. — Since the highest factor of $20\,a^6$ that is a perfect square is $4a^6$, $\sqrt{20\,a^6}$ is separated into two factors, a rational factor $\sqrt{4\,a^6}$, and an irrational factor $\sqrt{5}$. $\sqrt{20\,a^6} = \sqrt{4\,a^6} \times \sqrt{5}$, § 229, Prin. 3. Extracting the square root of $4\,a^6$ and prefixing the root to the irrational factor as a coefficient, the result is $2\,a^3\sqrt{5}$.

2. Reduce $\sqrt[3]{-864}$ to its simplest form.

PROCESS

$$\sqrt[3]{-864} = \sqrt[3]{-216 \times 4} = \sqrt[3]{-216} \times \sqrt[3]{4} = -6\sqrt[3]{4}$$

RULE. — *Separate the radical into two factors one of which is its highest rational factor. Extract the required root of the rational factor, multiply the result by the coefficient, if any, of the given radical, and place the product as the coefficient of the irrational factor.*

Simplify the following:

3. $\sqrt{12}$.

4. $\sqrt{75}$.

5. $\sqrt[3]{16}$.

6. $\sqrt{128}$.

7. $\sqrt[3]{250}$.

8. $\sqrt[4]{32}$.

9. $\sqrt{600}$.

10. $\sqrt{500}$.

11. $\sqrt[5]{160}$.

12. $\sqrt[3]{3000}$.

13. $\sqrt[3]{81}$.

14. $\sqrt[3]{189}$.

15. $\sqrt{162}$.

16. $\sqrt{18\,a^2}$.

17. $\sqrt{25\,b}$.

18. $\sqrt{98\,c^3}$.

19. $\sqrt{50\,a}$.

20. $\sqrt[5]{640}$.

21. $\sqrt{84}$.

22. $\sqrt[3]{72}$.

23. $\sqrt[3]{192}$.

24. $\sqrt{800}$.

25. $\sqrt[3]{3645}$.

26. $\sqrt{735}$.

27. $\sqrt{243\,a^5x^{10}}$.

28. $\sqrt[3]{128\,a^6b^4}$.

29. $\sqrt{405\,a^5y^2}$.

30. $\sqrt{375\,x^6y^3}$.

31. $(245\,a^6y^{-4})^{\frac{1}{2}}$.

32. $(135\,x^4y^5)^{\frac{1}{3}}$.

33. $(a^3 + 5\,a^2)^{\frac{1}{2}}$.

34. $(16\,x - 16)^{\frac{1}{2}}$.

35. $\sqrt{18\,x - 9}$.

36. $\sqrt[3]{x^6 - 2\,x^3}$.

37. $\sqrt{8 - 20\,b^2}$.

38. $5\sqrt{4\,a^2 + 4}$.

39. $\sqrt{5\,x^2 - 10\,xy + 5\,y^2}$.

40. $\sqrt{4\,a^3 - 24\,a^2x + 36\,ax^2}$.

41. $(3\,am^2 + 6\,am + 3\,a)^{\frac{1}{2}}$.

42. $(x^4y - 3\,x^3y^2 + 3\,x^2y^3 - xy^4)^{\frac{1}{3}}$

43. Reduce $\sqrt{\dfrac{a^2}{2\,y^3}}$ to its simplest form.

PROCESS

$$\sqrt{\frac{a^2}{2\,y^3}} = \sqrt{\frac{a^2 \times 2\,y}{2\,y^3 \times 2\,y}} = \sqrt{\frac{a^2}{4\,y^4}} \times \sqrt{2\,y} = \frac{a}{2\,y^2}\sqrt{2\,y}$$

EXPLANATION. — Since a radical is not in its simplest form when the expression under the radical sign is fractional, the denominator is to be removed; and since the radical is of the second degree, the denominator must be made a perfect square. The smallest factor that will accomplish this is $2y$. Multiplying the terms of the fraction by this factor, the largest rational factor of the resulting radical is found to be $\sqrt{\frac{a^2}{4y^4}}$, which is equal to $\frac{a}{2y^2}$. Therefore, the irrational factor is $\sqrt{2y}$, and its coefficient is $\frac{a}{2y^2}$.

Simplify the following:

44. $\sqrt{\frac{1}{2}}$.
45. $\sqrt{\frac{1}{3}}$.
46. $\sqrt{\frac{1}{5}}$.
47. $\sqrt{\frac{1}{8}}$.
48. $\sqrt{\frac{2}{3}}$.
49. $\sqrt{\frac{3}{8}}$.
50. $\sqrt[3]{\frac{5}{12}}$.
51. $\sqrt[3]{\frac{4}{5}}$.
52. $\sqrt{\frac{2a^3}{b}}$.
53. $\sqrt{\frac{5x^4y^2}{2a^2}}$.
54. $\sqrt[4]{\frac{x}{y}}$.
55. $\sqrt{\frac{1}{x^3}}$.
56. $\sqrt{\frac{2}{3y^5}}$.
57. $\sqrt{\frac{4a}{3x^2}}$.
58. $\sqrt{\frac{3x}{50a^3y}}$.
59. $\sqrt[3]{\frac{a}{3b^2}}$.
60. $(a+b)\sqrt{\frac{a+b}{a-b}}$.
61. $\frac{2y}{x-2y}\sqrt{\frac{x-2y}{2y}}$.
62. $(1-x^3)\sqrt{\frac{1-x+x^2}{1+x+x^2}}$.
63. $\frac{(a+b)^2}{a-b}\sqrt[3]{\frac{a+b}{(a-b)^2}}$.

263. To reduce a radical to its simplest form when the expression under the radical sign is a perfect power of a degree corresponding to some factor of the index of the root.

EXAMPLES

1. Reduce $\sqrt[6]{9a^2}$ to its simplest form.

PROCESS

$$\sqrt[6]{9a^2} = \sqrt[6]{(3a)^2} = (3a)^{\frac{2}{6}} = (3a)^{\frac{1}{3}} = \sqrt[3]{3a}$$

2. Reduce $\sqrt[9]{64a^6b^{15}}$ to its simplest form.

PROCESS

$$\sqrt[9]{64a^6b^{15}} = \sqrt[9]{2^6a^6b^6b^9} = b(2ab)^{\frac{6}{9}} = b(2ab)^{\frac{2}{3}} = b\sqrt[3]{4a^2b^2}$$

Simplify the following:

3. $\sqrt[4]{36}$.
4. $\sqrt[4]{25}$.
5. $\sqrt[4]{144}$.
6. $\sqrt[6]{81}$.
7. $\sqrt[4]{1600}$.
8. $\sqrt[6]{27\,a^3}$.
9. $\sqrt[6]{343}$.
10. $\sqrt[4]{289}$.
11. $\sqrt[4]{9\,a^2b^2c^6}$.
12. $\sqrt[4]{121\,a^6x^4}$.
13. $\sqrt[6]{a^4b^2c^4d^8}$.
14. $\sqrt[4]{(x^2-2\,xy+y^2)}$.

264. To reduce a mixed surd to an entire surd.

EXAMPLES

1. Express $2\,a\sqrt{5\,b}$ as an entire surd.

PROCESS

$$2\,a\sqrt{5\,b} = \sqrt{4\,a^2}\sqrt{5\,b} = \sqrt{4\,a^2 \times 5\,b} = \sqrt{20\,a^2b}$$

RULE. — *Raise the coefficient to a power corresponding to the index of the given radical, and introduce the result under the radical sign as a factor.*

Express as entire surds:

2. $2\sqrt{2}$.
3. $3\sqrt{5}$.
4. $5\sqrt{2}$.
5. $3\sqrt[4]{2}$.
6. $3\sqrt[3]{3}$.
7. $4\sqrt{5}$.
8. $\frac{1}{2}\sqrt{8}$.
9. $a^2\sqrt[3]{b}$.
10. $\frac{1}{2}\sqrt{2}$.
11. $\frac{3}{4}\sqrt{x^5}$.
12. $\frac{1}{2}\sqrt{bc}$.
13. $\frac{3}{4}\sqrt{\frac{7}{9}}$.
14. $\frac{4}{5}\sqrt{4\frac{3}{8}}$.
15. $\frac{3}{2}\sqrt{\frac{3}{2}\frac{3}{7}\,a^2}$.
16. $\frac{2}{3}\sqrt[3]{1\frac{1}{8}}$.
17. $\frac{2}{3}\sqrt[4]{3\frac{3}{8}}$.
18. $\frac{x+y}{x-y}\sqrt{\frac{x-y}{x+y}}$.
19. $\frac{a+4}{a-4}\sqrt{1-\frac{8}{a+4}}$.
20. $\frac{1}{ab}(a-b)^{\frac{1}{2}}$.

265. To reduce radicals of different degrees to equivalent radicals of the same degree.

1. Express $a^{\frac{1}{2}}$ by an equivalent radical with an exponent in higher terms.

2. What is the degree of the radical $x^{\frac{1}{4}}$? Express $x^{\frac{1}{4}}$ as a radical of the 12th degree. Express $x^{\frac{1}{6}}$ as a radical of the 12th degree. Express $b^{\frac{1}{2}}$ and $b^{\frac{2}{5}}$ as radicals of the same degree.

EXAMPLES

1. Reduce $\sqrt[4]{3}$, $\sqrt{2}$, and $\sqrt[3]{4}$ to equivalent radicals of the same degree.

PROCESS

$$\sqrt[4]{3} = 3^{\frac{1}{4}} = 3^{\frac{3}{12}} = \sqrt[12]{3^3} = \sqrt[12]{27}$$
$$\sqrt{2} = 2^{\frac{1}{2}} = 2^{\frac{6}{12}} = \sqrt[12]{2^6} = \sqrt[12]{64}$$
$$\sqrt[3]{4} = 4^{\frac{1}{3}} = 4^{\frac{4}{12}} = \sqrt[12]{4^4} = \sqrt[12]{256}$$

RULE. — *Express the given radicals with fractional exponents having a common denominator.*

Raise each number to the power indicated by the numerator of its fractional exponent, and indicate the root expressed by the common denominator.

Reduce to equivalent radicals of the same degree:

2. $\sqrt{2}$ and $\sqrt[4]{3}$.
3. $\sqrt{5}$ and $\sqrt[3]{6}$.
4. $\sqrt[4]{7}$ and $\sqrt{10}$.
5. $\sqrt[6]{10}$, $\sqrt{2}$, and $\sqrt[3]{5}$.
6. $\sqrt[6]{4}$, $\sqrt[4]{2}$, and $\sqrt{3}$.
7. $\sqrt[10]{13}$, $\sqrt{5}$, and $\sqrt[5]{4}$.
8. $\sqrt{3}$, $\sqrt[3]{5}$, and $\sqrt[4]{\frac{1}{27}}$.
9. $\sqrt{ab}$, $\sqrt[3]{ab^2}$, and $\sqrt[4]{2}$.
10. $\sqrt{a}$, $\sqrt[3]{b}$, $\sqrt[4]{x}$, and $\sqrt[6]{y}$.
11. $\sqrt[3]{a+b}$ and $\sqrt{x+y}$.
12. $\sqrt{\frac{2}{3}}$, $\sqrt[3]{\frac{1}{16}x}$, and $2\sqrt{5}$.
13. $\sqrt[n]{x}$, $\sqrt{xy}$, and $\sqrt[n]{x^2y^2}$.
14. $(a+b)\sqrt{a-b}$ and $\sqrt[3]{a-b}$.
15. $\sqrt{a+b}$, $\sqrt[4]{a^2+b^2}$, and $\sqrt{a-b}$.

ADDITION AND SUBTRACTION OF RADICALS

266. Radical terms that, in their simplest forms, are of the same degree and have the same number under the radical sign are called **Similar Radicals.**

267. PRINCIPLE. — *Only similar radicals can be united into one term by addition or subtraction.*

EXAMPLES

1. Find the sum of $\sqrt{50}$, $2\sqrt[6]{8}$, and $6\sqrt{\frac{1}{2}}$.

PROCESS

$$\begin{aligned} \sqrt{50} &= 5\sqrt{2} \\ 2\sqrt[6]{8} &= 2\sqrt{2} \\ 6\sqrt{\tfrac{1}{2}} &= 3\sqrt{2} \\ \text{Sum} &= 10\sqrt{2} \end{aligned}$$

EXPLANATION. — To ascertain whether or not the given expressions are similar radicals, each may be reduced to its simplest form. Since, in their simplest form, they are of the same degree and have the same number under the radical sign, they are similar, and their sum is the sum of the coefficients prefixed to the common radical factor.

Find the sum of

2. $\sqrt{50}$, $\sqrt{18}$, and $\sqrt{98}$.
3. $\sqrt{27}$, $\sqrt{12}$, and $\sqrt{75}$.
4. $\sqrt{20}$, $\sqrt{80}$, and $\sqrt{45}$.
5. $\sqrt{28}$, $\sqrt{63}$, and $\sqrt{700}$.
6. $\sqrt[3]{250}$, $\sqrt[3]{16}$, and $\sqrt[3]{54}$.
7. $\sqrt[3]{128}$, $\sqrt[3]{686}$, and $\sqrt[3]{\frac{1}{4}}$.
8. $\sqrt[3]{135}$, $\sqrt[3]{320}$, and $\sqrt[3]{625}$.
9. $\sqrt[3]{500}$, $\sqrt[3]{108}$, and $\sqrt[3]{-32}$.
10. $\sqrt{\frac{1}{2}}$, $\sqrt{12\frac{1}{2}}$, $\sqrt{\frac{1}{8}}$, and $\sqrt{1\frac{1}{8}}$.
11. $\sqrt{\frac{1}{3}}$, $\sqrt{75}$, $\frac{2}{3}\sqrt{3}$, and $\sqrt{12}$.
12. $\sqrt{\frac{3}{4}}$, $\frac{1}{3}\sqrt{3}$, $\frac{7}{6}\sqrt[4]{9}$, and $\sqrt{147}$.
13. $\sqrt[3]{40}$, $\sqrt{28}$, $\sqrt[6]{25}$, and $\sqrt{175}$.
14. $\sqrt[3]{375}$, $\sqrt{44}$, $\sqrt[3]{192}$, and $\sqrt{99}$.

Simplify:

15. $\sqrt{245}-\sqrt{405}+\sqrt{45}$.
16. $\sqrt{12}+3\sqrt{75}-2\sqrt{27}$.
17. $5\sqrt{72}+3\sqrt{18}-\sqrt{50}$.
18. $\sqrt[3]{128}+\sqrt[3]{686}-\sqrt[3]{54}$.
19. $\sqrt{112}-\sqrt{343}+\sqrt{448}$.
20. $\sqrt[3]{135}-\sqrt[3]{625}+\sqrt[3]{320}$.
21. $\sqrt[3]{\frac{8}{5}}+\sqrt[3]{\frac{1}{5}}+\sqrt[3]{5\frac{2}{5}}$.
22. $\sqrt[3]{864}-\sqrt[3]{4000}+\sqrt[3]{32}$
23. $\sqrt[3]{128\,x}+\sqrt[3]{375\,x}-\sqrt[3]{54\,x}$.
24. $\sqrt{\frac{a}{x^2}}+\sqrt{\frac{a}{y^2}}-\sqrt{\frac{a}{z^2}}$.
25. $\sqrt{\frac{ax^4}{by^2}}-\sqrt{\frac{16\,ax^2}{by^2}}+\sqrt{\frac{4\,ax^2}{by^2}}$.
26. $\sqrt{\frac{a}{bc}}+\sqrt{\frac{b}{ac}}+\sqrt{\frac{c}{ab}}$.
27. $\sqrt{(a+b)^2c}-\sqrt{(a-b)^2c}$.
28. $6\sqrt[3]{\frac{40}{27}}+4\sqrt[3]{\frac{10}{16}}-8\sqrt[3]{\frac{675}{320}}$.
29. $\sqrt[5]{-96\,x^4}+2\sqrt[5]{3\,x^4}-\sqrt[3]{5\,x}+\sqrt[3]{40\,x^4}$.
30. $\sqrt[3]{abx}-\sqrt[6]{a^2b^2x^2}+\sqrt[9]{8\,a^3b^3x^3}$.
31. $\sqrt{3\,x^3+30\,x^2+75\,x}-\sqrt{3\,x^3-6\,x^2+3\,x}$.
32. $\sqrt{5\,a^5+30\,a^4+45\,a^3}-\sqrt{5\,a^5-40\,a^4+80\,a^3}$.
33. $\sqrt{50}+\sqrt[6]{9}-4\sqrt{\frac{1}{2}}+\sqrt[3]{-24}+\sqrt[9]{27}-\sqrt[4]{64}$.
34. $\sqrt{\frac{2}{3}}+6\sqrt{\frac{5}{4}}-\frac{1}{5}\sqrt{18}+\sqrt[4]{36}-\sqrt[8]{\frac{16}{81}}+\sqrt[6]{125}-2\sqrt{\frac{2}{25}}$.

MULTIPLICATION OF RADICALS

268. 1. What is the exponent of a in $a^2 \times a^3$? in $a^{\frac{1}{4}} \times a^{\frac{3}{4}}$? in $a^{\frac{3}{5}} \times a^{\frac{1}{5}}$? in $a^{\frac{1}{2}} \times a^{\frac{1}{4}}$? in $a^{\frac{1}{2}} \times a^{\frac{1}{3}}$? in $\sqrt{a} \times \sqrt[3]{a}$?

2. When the fractional exponents indicate different roots, what must be done before the radicals can be multiplied together?

Examples

PROCESSES.—**1.** $\sqrt{7} \times \sqrt{5} = \sqrt{35}$

2. $5\sqrt{3} \times 2\sqrt{15} = 10\sqrt{45} = 10 \times 3\sqrt{5} = 30\sqrt{5}$

3. $2\sqrt{3} \times 3\sqrt[3]{2} = 2\sqrt[6]{27} \times 3\sqrt[6]{4} = 6\sqrt[6]{108}$

RULE. — *If necessary, reduce the radicals to the same degree. Multiply the coefficients together for the coefficient of the product and the factors under the radical sign for the radical factor of the product, and simplify the result.*

Multiply:

4. $\sqrt{2}$ by $\sqrt{8}$.

5. $\sqrt{2}$ by $\sqrt{6}$.

6. $\sqrt{3}$ by $\sqrt{15}$.

7. $\sqrt{3}$ by $\sqrt{48}$.

8. $2\sqrt{5}$ by $3\sqrt{10}$.

9. $3\sqrt{20}$ by $2\sqrt{2}$.

10. $\sqrt{2}$ by $3\sqrt[3]{3}$.

11. $\sqrt[3]{2}$ by $2\sqrt{5}$.

12. $\sqrt[3]{3}$ by $3\sqrt{3}$.

13. $2\sqrt{6}$ by $\sqrt{18}$.

14. $2\sqrt[3]{3}$ by $3\sqrt[3]{45}$.

15. $2\sqrt[4]{6}$ by $3\sqrt{6}$.

16. $3\sqrt{3}$ by $2\sqrt[3]{5}$.

17. $\sqrt[4]{5}$ by $\sqrt[6]{10}$.

18. $2\sqrt[3]{250}$ by $\sqrt{2}$.

19. $2\sqrt[3]{24}$ by $\sqrt[3]{18}$.

20. $\sqrt{28}$ by $3\sqrt{7}$.

21. $2\sqrt[5]{2}$ by $\sqrt[10]{512}$.

Find the value of

22. $\sqrt{ab} \times \sqrt{bc} \times \sqrt{cd} \times \sqrt{da}$.

23. $\sqrt{x^3y^2} \times \sqrt{12\,x} \times \sqrt{75\,xy^2}$.

24. $\sqrt{2\,ab} \times \sqrt[3]{abc} \times \sqrt[4]{4\,a^2b^2}$.

25. $\sqrt{mn} \times \sqrt[4]{m^2n} \times \sqrt[8]{mn^4}$.

26. $\sqrt{2\,axy} \times \sqrt[3]{xy} \times \sqrt[4]{a^2xy}$.

27. $\sqrt{x^{-1}y} \times \sqrt[3]{x^{-2}y^2} \times \sqrt{x^{-3}y^3}$.

28. $\sqrt{a-b} \times \sqrt[4]{a^2b^2} \times \sqrt[4]{(a-b)^{-2}}$.

29. $\sqrt{\frac{2}{3}} \times \sqrt{\frac{4}{5}} \times \sqrt{\frac{3}{4}}$.

30. $\sqrt{\frac{1}{2}} \times \sqrt{\frac{4}{5}} \times \sqrt{\frac{7}{2}}$.

31. $\sqrt[3]{\frac{2}{3}} \times \sqrt[3]{\frac{3}{4}} \times \sqrt{\frac{1}{2}}$.

32. $\sqrt[3]{\frac{1}{3}} \times \sqrt[6]{\frac{3}{2}} \times \sqrt{\frac{2}{3}}$.

33. $\sqrt[6]{\frac{3}{2}} \times \sqrt[3]{\frac{4}{3}} \times \sqrt{\frac{3}{2}}$.

34. $\sqrt[4]{\frac{2}{3}} \times \sqrt{\frac{3}{4}} \times \sqrt[4]{\frac{6}{8}}$.

35. Multiply $2\sqrt{2}+3\sqrt{3}$ by $5\sqrt{2}-2\sqrt{3}$.

SOLUTION

$$\begin{array}{r} 2\sqrt{2}+3\sqrt{3} \\ 5\sqrt{2}-2\sqrt{3} \\ \hline 20+15\sqrt{6} \\ \quad -\ 4\sqrt{6}-18 \\ \hline 20+11\sqrt{6}-18 \end{array}$$

$$= 2+11\sqrt{6}.$$

Multiply:

36. $\sqrt{5}+\sqrt{3}$ by $\sqrt{5}-\sqrt{3}$.

37. $\sqrt{7}+\sqrt{2}$ by $\sqrt{7}-\sqrt{2}$.

38. $\sqrt{6}-\sqrt{5}$ by $\sqrt{6}-\sqrt{5}$.

39. $5-\sqrt{5}$ by $1+\sqrt{5}$.

40. $4\sqrt{7}+1$ by $4\sqrt{7}-1$.

41. $2\sqrt{2}+\sqrt{3}$ by $4\sqrt{2}+\sqrt{3}$.

42. $2\sqrt{3}+3\sqrt{5}$ by $3\sqrt{3}+2\sqrt{5}$.

43. $3\,a+\sqrt{5}$ by $2\,a-\sqrt{5}$.

44. $2\sqrt{6}-3\sqrt{5}$ by $4\sqrt{3}-\sqrt{10}$.

45. $a^2-ab\sqrt{2}+b^2$ by $a^2+ab\sqrt{2}+b^2$.

46. $x-\sqrt{xyz}+yz$ by $\sqrt{x}+\sqrt{yz}$.

47. $x\sqrt{x}-x\sqrt{y}+y\sqrt{x}-y\sqrt{y}$ by $\sqrt{x}+\sqrt{y}$.

DIVISION OF RADICALS

269. **1.** What is the exponent of a in $a^5 \div a^2$? in $a^{\frac{3}{4}} \div a^{\frac{1}{4}}$? in $a^{\frac{1}{2}} \div a^{\frac{1}{4}}$? in $a^{\frac{1}{2}} \div a^{\frac{1}{3}}$? in $\sqrt{a} \div \sqrt[3]{a}$?

2. When the fractional exponents indicate different roots, what must be done before one radical can be divided by another?

EXAMPLES

PROCESSES. — **1.** $\sqrt{60} \div \sqrt{12} = \sqrt{5}$

2. $\sqrt[3]{2} \div \sqrt{2} = \sqrt[6]{4} \div \sqrt[6]{8} = \sqrt[6]{\frac{4}{8}} = \sqrt[6]{\frac{3}{6}\frac{2}{4}} = \frac{1}{2}\sqrt[6]{32}$

3. $\sqrt[3]{x^2} \div \sqrt[4]{y} = \dfrac{(x^2)^{\frac{1}{3}}}{(y)^{\frac{1}{4}}} = \dfrac{(x^8)^{\frac{1}{12}}}{(y^3)^{\frac{1}{12}}} = \left(\dfrac{x^8}{y^3}\right)^{\frac{1}{12}} = \sqrt[12]{\dfrac{x^8}{y^3}} = \dfrac{1}{y}\sqrt[12]{x^8y^9}$

RULE. — *If necessary, reduce the radicals to the same degree. To the quotient of the coefficients annex the quotient of the radical factors under the common radical sign, and reduce the result to its simplest form.*

Find the quotient of

4. $\sqrt{50} \div \sqrt{8}$.

5. $\sqrt{72} \div 2\sqrt{6}$.

6. $4\sqrt{5} \div \sqrt{40}$.

7. $6\sqrt{7} \div \sqrt{126}$.

8. $\sqrt[3]{4} \div \sqrt{2}$.

9. $7\sqrt[3]{135} \div \sqrt[3]{9}$.

10. $7\sqrt{75} \div 5\sqrt{28}$.

11. $\sqrt[3]{16} \div \sqrt[6]{32}$.

12. $2\sqrt[3]{12} \div \sqrt{8}$.

13. $\sqrt[3]{ax} \div \sqrt{xy}$.

14. $\sqrt{2\,ab^3} \div \sqrt[4]{a^4b^4}$.

15. $\sqrt[3]{a^2x^2} \div \sqrt{2\,ax}$.

16. $\sqrt[3]{9\,a^2b^2} \div \sqrt{3\,ab}$.

17. $\sqrt[4]{4\,x^2y^2} \div \sqrt[3]{2\,xy}$.

18. $\sqrt{a-b} \div \sqrt{a+b}$.

19. $3\sqrt[3]{\frac{2}{3}} \div \sqrt{\frac{3}{4}}$.

20. Divide $\sqrt{15} - \sqrt{3}$ by $\sqrt{3}$.

21. Divide $\sqrt{6} - 2\sqrt{3} + 4$ by $\sqrt{2}$.

22. Divide $\sqrt{2} + 2 + \frac{1}{3}\sqrt{42}$ by $\frac{1}{3}\sqrt{6}$.

23. Divide $5\sqrt{2} + 5\sqrt{3}$ by $\sqrt{10} + \sqrt{15}$.

24. Divide $5 + 5\sqrt{30} + 36$ by $\sqrt{5} + 2\sqrt{6}$.

INVOLUTION AND EVOLUTION OF RADICALS

270. In finding powers and roots of radicals it is frequently convenient to use fractional exponents.

Examples

1. What is the cube of $2\sqrt{ax^3}$?

Solution. $(2\sqrt{ax^3})^3 = 2^3(ax^3)^{\frac{3}{2}} = 8\,a^{\frac{3}{2}}x^{\frac{9}{2}} = 8\sqrt{a^3x^9} = 8\,ax^4\sqrt{ax}.$

2. What is the square of $3\sqrt[6]{x^5}$?

Solution. $(3\sqrt[6]{x^5})^2 = 9(x^5)^{\frac{2}{6}} = 9\,x^{\frac{5}{3}} = 9\sqrt[3]{x^5} = 9\,x\sqrt[3]{x^2}.$

3. What is the cube of $\sqrt{2}+1$?

Solution

$$\begin{aligned}(\sqrt{2}+1)^3 &= (\sqrt{2})^3 + 3(\sqrt{2})^2\cdot 1 + 3\sqrt{2}\cdot 1^2 + 1^3\\ &= 2\sqrt{2} + 6 + 3\sqrt{2} + 1\\ &= 7 + 5\sqrt{2}.\end{aligned}$$

In such cases expand by the binomial formula.

Square:	Cube:	Involve as indicated:
4. $3\sqrt{ab}$.	**9.** $2\sqrt{5}$.	**14.** $(-2\sqrt{2\,ab})^4$.
5. $2\sqrt[3]{3\,x}$.	**10.** $3\sqrt{2}$.	**15.** $(-\sqrt{2}\,\sqrt[6]{x})^3$.
6. $x\sqrt[3]{2\,x^3}$.	**11.** $2\sqrt[3]{a^2}$.	**16.** $(-\sqrt{2}\,\sqrt[3]{ax^2})^4$.
7. $n^2\sqrt{4\,b}$.	**12.** $\sqrt[4]{a^2b^3}$.	**17.** $(-2\sqrt{x}\,\sqrt[3]{y})^5$.
8. $a\sqrt[4]{a^2b}$.	**13.** $\sqrt[6]{4\,n^3}$.	**18.** $(-3\,a^{\frac{n}{2}}x^{\frac{n}{3}})^6$.

Expand:

19. $(2+\sqrt{6})^2$	**22.** $(2-\sqrt{3})^3$.	**25.** $(\sqrt{x}\pm 1)^2$.
20. $(2+\sqrt{2})^2$	**23.** $(\sqrt{7}-\sqrt{6})^2$.	**26.** $(\sqrt{a}-\sqrt{b})^3$.
21. $(2+\sqrt{5})^3$	**24.** $(2\sqrt{2}-\sqrt{3})^2$	**27.** $\sqrt{x}\pm 1)^3$.

28. What is the cube root of $-27\sqrt{ax}$?

Solution. $\sqrt[3]{-27\sqrt{ax}} = (-27)^{\frac{1}{3}}(ax)^{\frac{1}{6}} = -3\sqrt[6]{ax}.$

29. What is the fourth root of $\sqrt{2x}$?

SOLUTION. $\sqrt[4]{\sqrt{2x}} = [(2x)^{\frac{1}{2}}]^{\frac{1}{4}} = (2x)^{\frac{1}{8}} = \sqrt[8]{2x}$.

Find the square root of

30. $\sqrt{2}$. **31.** $\sqrt[3]{5}$. **32.** $\sqrt[6]{x^2}$. **33.** $\sqrt[3]{x^n}$. **34.** $\sqrt[5]{x^{12}}$. **35.** $\sqrt[n]{a^n x^2}$.

Find the cube root of

36. $\sqrt{2x}$. **37.** $\sqrt{7a^3}$. **38.** $\sqrt[4]{8m^3x^3}$. **39.** $-27\sqrt{x^6}$. **40.** $-64\sqrt[5]{a^3y^3}$. **41.** $-\sqrt{a^n b^n}$.

Simplify the following indicated roots:

42. $\sqrt{\sqrt[3]{4a^2x^4}}$. **43.** $\sqrt[3]{\sqrt{a^{12}x^4}}$. **44.** $(\sqrt{8a^3x^3})^{\frac{1}{3}}$. **45.** $(\sqrt{x^m y^m})^{\frac{1}{mn}}$. **46.** $\sqrt{\left(\frac{x^n b^2}{a^{-2}y^n}\right)^{\frac{2}{n}}}$.

RATIONALIZATION

271. How may the fraction $\frac{1}{\sqrt{2}}$ be reduced to the form $\frac{\sqrt{2}}{2}$?

$\frac{3}{\sqrt{2}}$ to $\frac{3\sqrt{2}}{2}$? $\frac{2}{\sqrt{5}}$ to $\frac{2\sqrt{5}}{5}$? $\frac{a}{\sqrt{x}}$ to $\frac{a\sqrt{x}}{x}$?

272. The process of rendering a surd expression rational is called **Rationalization.**

The factor by which a surd expression is multiplied to render it rational is called the **Rationalizing Factor.**

The denominator of $\frac{2}{\sqrt{3}}$ is rendered rational by multiplying it by $\sqrt{3}$.

Thus, $\frac{2}{\sqrt{3}} = \frac{2\sqrt{3}}{3}$. $\sqrt{3}$ is a rationalizing factor for the denominator.

273. A binomial, one or both of whose terms are surds, is called a **Binomial Surd.**

$2+\sqrt{3}$, $\sqrt{x}+\sqrt{y}$, and $a^{\frac{1}{3}} - b^{\frac{1}{3}}$ are binomial surds.

274. Two binomial surds of the second degree whose product is rational are called **Conjugate Surds.**

$\sqrt{a}+\sqrt{b}$ and $\sqrt{a}-\sqrt{b}$ are conjugate surds; also $a+\sqrt{b}$ and $a-\sqrt{b}$.

Conjugate surds differ only in the sign of one of the terms.

275. PRINCIPLE. — *A binomial surd of the second degree may be rationalized by multiplying it by its conjugate.*

Thus, the product of $a+\sqrt{b}$ and $a-\sqrt{b}$ is a^2-b.

EXAMPLES

1. Find the simplest rationalizing factor for $\sqrt{3x}$.

SOLUTION. $\sqrt{3x}\times\sqrt{3x}=\sqrt{9x^2}=3x.$

$\therefore$ $\sqrt{3x}$ is the simplest rationalizing factor.

2. Find the simplest rationalizing factor for $\sqrt[3]{4a}$.

SOLUTION. $\sqrt[3]{4a}\times\sqrt[3]{2a^2}=\sqrt[3]{8a^3}=2a.$

$\therefore$ $\sqrt[3]{2a^2}$ is the simplest rationalizing factor.

Find the simplest rationalizing factor for

3. $\sqrt{3}$. 5. $\sqrt{ax}$. 7. $\sqrt{9x}$. 9. $\sqrt[3]{4}$.

4. $\sqrt{6}$. 6. $\sqrt{4a}$. 8. $\sqrt{8}$. 10. $\sqrt[3]{a^2}$.

11. Find the simplest rationalizing factor for $\sqrt{5}+\sqrt{3}$.

SOLUTION. $(\sqrt{5}+\sqrt{3})(\sqrt{5}-\sqrt{3})=(\sqrt{5})^2-(\sqrt{3})^2=5-3=2.$

$\therefore$ $\sqrt{5}-\sqrt{3}$ is the simplest rationalizing factor.

EXPLANATION. — Since $(\sqrt{5})^2=5$ and $(\sqrt{3})^2=3$, $\sqrt{5}+\sqrt{3}$ may be rationalized by multiplying it by some factor that will give the square of each term, but no other terms. Since the product of the sum and difference of two numbers is equal to the difference of their squares, the simplest rationalizing factor for $\sqrt{5}+\sqrt{3}$ is its conjugate, $\sqrt{5}-\sqrt{3}$ (Prin.).

12. Find the simplest rationalizing factor for $\sqrt{a}+\sqrt[3]{b^2}$.

SOLUTION. — By § 111, $\sqrt{a}+\sqrt[3]{b^2}$, or $a^{\frac{1}{2}}+b^{\frac{2}{3}}$, is exactly contained in the sum of any like odd powers of $a^{\frac{1}{2}}$ and $b^{\frac{2}{3}}$, and also in the difference of any like even powers of $a^{\frac{1}{2}}$ and $b^{\frac{2}{3}}$. Since in raising $a^{\frac{1}{2}}$ and $b^{\frac{2}{3}}$ to the same power the exponents $\frac{1}{2}$ and $\frac{2}{3}$ are multiplied by the index of the power, the lowest like powers of $a^{\frac{1}{2}}$ and $b^{\frac{2}{3}}$ that are rational numbers are the sixth powers, which are even powers. Hence, the rational expression of lowest degree in which $a^{\frac{1}{2}}+b^{\frac{2}{3}}$ is exactly contained is $(a^{\frac{1}{2}})^6-(b^{\frac{2}{3}})^6$, or a^3-b^4.

Dividing a^3-b^4 by $a^{\frac{1}{2}}+b^{\frac{2}{3}}$, or by $\sqrt{a}+\sqrt[3]{b^2}$, the rationalizing factor is found to be $a^{\frac{5}{2}}-a^2b^{\frac{2}{3}}+a^{\frac{3}{2}}b^{\frac{4}{3}}-ab^2+a^{\frac{1}{2}}b^{\frac{8}{3}}-b^{\frac{10}{3}}$.

Find the simplest rationalizing factor for

13. $\sqrt{3}+\sqrt{2}$.
14. $\sqrt{3}-\sqrt{2}$.
15. $2+\sqrt{3}$.
16. $\sqrt{a}+\sqrt{x}$.
17. $a-2\sqrt{b}$.
18. $3\sqrt{x}+2y$.
19. $\sqrt[3]{a^2}+\sqrt[3]{b}$.
20. $\sqrt[3]{a}-\sqrt[5]{x}$.
21. $\sqrt{x}+\sqrt[5]{y^3}$.
22. Rationalize the denominator of $\dfrac{3}{\sqrt{12}}$.

SOLUTION

$$\frac{3}{\sqrt{12}}=\frac{3\times\sqrt{3}}{\sqrt{12}\times\sqrt{3}}=\frac{3\sqrt{3}}{\sqrt{36}}=\frac{3\sqrt{3}}{6}=\frac{\sqrt{3}}{2}, \text{ or } \tfrac{1}{2}\sqrt{3}.$$

Rationalize the denominators:

23. $\dfrac{1}{\sqrt{3}}$.
24. $\dfrac{2}{\sqrt{5}}$.
25. $\sqrt{\dfrac{2}{3}}$.
26. $\dfrac{\sqrt{a}}{\sqrt{b}}$.
27. $\dfrac{2}{\sqrt[3]{4}}$.
28. $\dfrac{2\sqrt{a}}{\sqrt{by}}$.
29. $\dfrac{1}{\sqrt{x^7}}$.
30. $\dfrac{ax}{\sqrt{2\,ax}}$.
31. $\dfrac{\sqrt{6}}{\sqrt[3]{12}}$.
32. $\dfrac{\sqrt{a}}{\sqrt[3]{ax^2}}$.
33. $\dfrac{\sqrt{a+b}}{\sqrt{a-b}}$.
34. $\dfrac{\sqrt{x-2}}{\sqrt{x+2}}$.
35. Rationalize the denominator of $\dfrac{\sqrt{7}-\sqrt{3}}{\sqrt{7}+\sqrt{3}}$.

SOLUTION

$$\frac{\sqrt{7}-\sqrt{3}}{\sqrt{7}+\sqrt{3}}=\frac{(\sqrt{7}-\sqrt{3})(\sqrt{7}-\sqrt{3})}{(\sqrt{7}+\sqrt{3})(\sqrt{7}-\sqrt{3})}=\frac{7-2\sqrt{21}+3}{7-3}=\frac{10-2\sqrt{21}}{4}=\frac{5-\sqrt{21}}{2}.$$

Rationalize the denominators:

36. $\dfrac{\sqrt{3}+\sqrt{2}}{\sqrt{3}-\sqrt{2}}$.
37. $\dfrac{5}{\sqrt{5}-\sqrt{3}}$.
38. $\dfrac{\sqrt{2}-1}{\sqrt{2}+\sqrt{3}}$.
39. $\dfrac{5-3\sqrt{2}}{2-\sqrt{2}}$.
40. $\dfrac{1-\sqrt{7}}{\sqrt{8}-\sqrt{7}}$.
41. $\dfrac{\sqrt{x}+\sqrt{y}}{\sqrt{x}-\sqrt{y}}$.
42. $\dfrac{4\sqrt{2}+6\sqrt{3}}{3\sqrt{3}-2\sqrt{2}}$.
43. $\dfrac{\sqrt{x+1}-2}{\sqrt{x+1}+2}$.
44. $\dfrac{x-\sqrt{x^2-1}}{x+\sqrt{x^2-1}}$.
45. $\dfrac{a\sqrt{a}-\sqrt{x+1}}{\sqrt{a^3}+\sqrt{x+1}}$.

46. $\dfrac{\sqrt{x+y}-\sqrt{x-y}}{\sqrt{x+y}+\sqrt{x-y}}$.

47. $\dfrac{\sqrt{a^2+a+1}-1}{\sqrt{a^2+a+1}+1}$.

48. Find the approximate value of $\dfrac{5}{\sqrt{3}}$.

SOLUTION

$$\frac{5}{\sqrt{3}}=\frac{5\sqrt{3}}{3}=\frac{5\times 1.73205}{3}=2.88675.$$

In solving the following examples, the work will be lessened by observing that $\sqrt{2}=1.41421$, $\sqrt{3}=1.73205$, and $\sqrt{5}=2.23607$.

Find the approximate value of

49. $\dfrac{5}{\sqrt{2}}$.

50. $\dfrac{2}{\sqrt{5}}$.

51. $\dfrac{6}{\sqrt{8}}$.

52. $\dfrac{10}{\sqrt{45}}$.

53. $\dfrac{15}{\sqrt{50}}$.

54. $\dfrac{1}{\sqrt{125}}$.

55. $\dfrac{8-\sqrt{3}}{2-\sqrt{3}}$.

56. $\dfrac{1+\sqrt{2}}{2-\sqrt{2}}$.

57. $\dfrac{5+2\sqrt{5}}{5-2\sqrt{5}}$.

58. Simplify $\dfrac{\sqrt{2}-\sqrt{3}-\sqrt{5}}{\sqrt{2}+\sqrt{3}+\sqrt{5}}$.

SOLUTION

Since $(\sqrt{2}+\sqrt{3})-\sqrt{5}=(\sqrt{2}-\sqrt{5})+\sqrt{3}$,

$$\frac{\sqrt{2}-\sqrt{3}-\sqrt{5}}{\sqrt{2}+\sqrt{3}+\sqrt{5}}=\frac{(\sqrt{2}-\sqrt{5})-\sqrt{3}}{(\sqrt{2}+\sqrt{3})+\sqrt{5}}\times\frac{(\sqrt{2}-\sqrt{5})+\sqrt{3}}{(\sqrt{2}+\sqrt{3})-\sqrt{5}}$$

$$=\frac{2-2\sqrt{10}+5-3}{2+2\sqrt{6}+3-5}=\frac{4-2\sqrt{10}}{2\sqrt{6}}$$

$$=\frac{2-\sqrt{10}}{\sqrt{6}}=\frac{2\sqrt{6}-2\sqrt{15}}{6}=\frac{\sqrt{6}-\sqrt{15}}{3}.$$

Rationalize the denominators:

59. $\dfrac{\sqrt{2}-\sqrt{5}-\sqrt{7}}{\sqrt{2}+\sqrt{5}+\sqrt{7}}$.

60. $\dfrac{\sqrt{3}+\sqrt{2}}{\sqrt{3}+\sqrt{2}-\sqrt{6}}$.

61. $\dfrac{1}{\sqrt{2}+\sqrt{3}+\sqrt{5}}$.

62. $\dfrac{2\sqrt{2}-3\sqrt{3}+4\sqrt{5}}{\sqrt{2}+\sqrt{3}-\sqrt{5}}$.

276. **To find the square root of a binomial surd.**

$$(\sqrt{2}+\sqrt{6})^2 = 2 + 2\sqrt{12} + 6 = 8 + 2\sqrt{12};$$

$$(\sqrt{4}+\sqrt{3})^2 = 4 + 2\sqrt{12} + 3 = 7 + 2\sqrt{12};$$

or $$(2+\sqrt{3})^2 = 4 + 4\sqrt{3} + 3 = 7 + 4\sqrt{3}.$$

1. Since $(\sqrt{2}+\sqrt{6})^2 = 8 + 2\sqrt{12}$, what is the square root of $8 + 2\sqrt{12}$?

2. How does the product of the terms of the square root of $8 + 2\sqrt{12}$ compare with the irrational term $2\sqrt{12}$?

3. How does the sum of the squares of the terms of the square root compare with the rational term 8?

4. How, then, may the square root of $8 + 2\sqrt{12}$ be found from the terms of $8 + 2\sqrt{12}$?

5. How may the terms of the square root of $7 + 2\sqrt{12}$, or the equivalent expression $7 + 4\sqrt{3}$, be found? After the irrational term is divided by 2, what two factors of the result are selected for the terms of the root?

277. A surd of the second degree is called a **Quadratic Surd.**

$\sqrt{x}$, $4\sqrt{x}$, $\sqrt{x}+\sqrt{y}$, and $3 + 2\sqrt{5}$ are quadratic surds.

278. PRINCIPLE. — *The terms of the square root of a quadratic binomial surd that is a perfect square may be obtained by dividing the irrational term by 2 and then separating the quotient into two factors, the sum of whose squares is the rational term.*

EXAMPLES

1. Find the square root of $14 + 8\sqrt{3}$.

SOLUTION

Since, if $14 + 8\sqrt{3}$ is the square of a binomial quadratic surd, the irrational term $8\sqrt{3}$ is *twice* the product of the terms of the root (Prin.), $4\sqrt{3}$, or $\sqrt{48}$, is the product of the terms of the binomial surd. Since the two factors of $\sqrt{48}$, the sum of whose squares is 14, are $\sqrt{6}$ and $\sqrt{8}$, the required square root is equal to $\sqrt{6} + \sqrt{8}$.

$$\therefore \sqrt{14 + 8\sqrt{3}} = \sqrt{6} + \sqrt{8}.$$

2. Find the square root of $11 - 6\sqrt{2}$.

SOLUTION

$$\sqrt{11 - 6\sqrt{2}} = \sqrt{11 - 2\sqrt{18}}$$
$$= 3 - \sqrt{2}.$$

Find the square root of each of the following:

3. $12 + 2\sqrt{35}$.

4. $16 - 2\sqrt{60}$.

5. $15 + 2\sqrt{26}$.

6. $16 - 2\sqrt{55}$.

7. $11 + 2\sqrt{30}$.

8. $7 - 2\sqrt{10}$.

9. $3 - 2\sqrt{2}$.

10. $6 + 2\sqrt{5}$.

11. $12 + 4\sqrt{5}$.

12. $11 + 4\sqrt{7}$.

13. $12 - 6\sqrt{3}$.

14. $17 + 12\sqrt{2}$.

15. $15 - 6\sqrt{6}$.

16. $18 + 6\sqrt{5}$.

17. $a^2 + b + 2a\sqrt{b}$.

18. $2a - 2\sqrt{a^2 - b^2}$.

PROPERTIES OF QUADRATIC SURDS

279. *The square root of a rational number cannot be partly rational and partly a quadratic surd.*

For, if possible, let $\sqrt{y} = \sqrt{b} \pm m$.

By squaring, $y = b \pm 2m\sqrt{b} + m^2$,

and $\sqrt{b} = \pm \dfrac{y - m^2 - b}{2m}$;

that is, a surd is equal to a rational number, which is impossible. Therefore, $\sqrt{y}$ cannot be equal to $\sqrt{b} \pm m$.

280. *In any equation containing rational numbers and quadratic surds, as* $a + \sqrt{b} = x + \sqrt{y}$, *the rational parts are equal, and also the irrational parts.*

Let $a + \sqrt{b} = x + \sqrt{y}$. (1)

Since a and x are both rational, if possible, let

$$a = x \pm m. \quad (2)$$

Then, $x \pm m + \sqrt{b} = x + \sqrt{y}$, (3)

and $\sqrt{y} = \sqrt{b} \pm m$. (4)

Since, § 279, equation (4) is impossible, $a = x \pm m$ is impossible; that is, a is neither greater nor less than x.

Therefore, $a = x$, and, Eq. (1), $\sqrt{b} = \sqrt{y}$.

Hence, if $a + \sqrt{b} = x + \sqrt{y}$, $a = x$, and $\sqrt{b} = \sqrt{y}$.

281. *If* $\sqrt{a+\sqrt{b}} = \sqrt{x} + \sqrt{y}$, *then* $\sqrt{a-\sqrt{b}} = \sqrt{x} - \sqrt{y}$, *when* a, b, x, *and* y *are rational and* $a > \sqrt{b}$.

For, squaring, $a + \sqrt{b} = x + 2\sqrt{xy} + y$.

Therefore, § 280, $a = x + y$, and $\sqrt{b} = 2\sqrt{xy}$.

Hence, $a - \sqrt{b} = x + y - 2\sqrt{xy}$.

Whence, $\sqrt{a-\sqrt{b}} = \sqrt{x} - \sqrt{y}$.

Examples

1. Find the square root of $21 + 6\sqrt{10}$.

Solution

Let $\sqrt{x} + \sqrt{y} = \sqrt{21 + 6\sqrt{10}}$. (1)

Then, § 281, $\sqrt{x} - \sqrt{y} = \sqrt{21 - 6\sqrt{10}}$. (2)

Multiplying, $x - y = \sqrt{441 - 360} = \sqrt{81}$,

or $x - y = 9$. (3)

Squaring (1), $x + 2\sqrt{xy} + y = 21 + 6\sqrt{10}$.

Therefore, § 280, $x + y = 21$. (4)

Solving (4) and (3), $x = 15$, $y = 6$.

$\therefore \sqrt{x} = \sqrt{15}$, $\sqrt{y} = \sqrt{6}$.

Hence, the square root of $21 + 6\sqrt{10}$ is $\sqrt{15} + \sqrt{6}$.

Find the square root of

2. $25 + 10\sqrt{6}$.
3. $19 + 6\sqrt{2}$.
4. $45 + 30\sqrt{2}$.
5. $35 - 14\sqrt{6}$.
6. $11 + 6\sqrt{2}$.
7. $24 - 8\sqrt{5}$.
8. $16 + 6\sqrt{7}$.
9. $21 - 8\sqrt{5}$.
10. $47 - 12\sqrt{11}$.
11. $56 + 32\sqrt{3}$.
12. $35 - 12\sqrt{6}$.
13. $56 - 12\sqrt{3}$.
14. $2 + \sqrt{3}$.
15. $6 + \sqrt{35}$.
16. $1 + \frac{2}{3}\sqrt{2}$.
17. $2 + \frac{4}{5}\sqrt{6}$.
18. $30 + 20\sqrt{2}$.
19. $18 - 6\sqrt{5}$.

RADICAL EQUATIONS

282. An equation involving an irrational root of an unknown number is called an **Irrational**, or **Radical Equation.**

$x^{\frac{1}{2}} = 3$, $\sqrt{x+1} = \sqrt{x-4} + 1$, and $\sqrt[3]{x-1} = 2$ are radical equations.

283. An equation containing quadratic surds involving x may be rationalized with respect to x by writing all the terms in the first member and multiplying both members by the proper rationalizing factor.

To rationalize $$\sqrt{x-3} = 2. \tag{1}$$

Transposing, $$\sqrt{x-3} - 2 = 0. \tag{2}$$

Multiplying by the conjugate surd,

$$(\sqrt{x-3} - 2)(\sqrt{x-3} + 2) = 0, \tag{3}$$

or $$x - 3 - 4 = 0. \tag{4}$$

The rationalization of such equations, however, is more conveniently accomplished by the process of squaring.

Thus, by squaring (1), (4) may be obtained in the form

$$x - 3 = 4. \tag{5}$$

It is evident, then, that squaring an equation is equivalent to multiplying both members by the same unknown expression, an operation likely to introduce roots (§ 196). The roots introduced, if any, when an equation is rationalized are those of the equation or equations formed by placing each rationalizing factor equal to zero.

Thus, in squaring the equation $\sqrt{x-3} = 2$, the root of $\sqrt{x-3} = -2$ is introduced. But if $\sqrt{4}$ is taken to mean either $+2$ or -2, this equation has the same root as the given equation and no root has been introduced.

Repeated squaring is often necessary to free an equation of quadratic surds involving x. This corresponds to repeated rationalization with respect to particular surds.

Thus, $$\sqrt{x} - 5 = -\sqrt{x+5}.$$

Squaring, $$x - 10\sqrt{x} + 25 = +(x+5) = x + 5.$$

Simplifying, $$\sqrt{x} = 2.$$

Squaring, $$x = 4.$$

Or, transposing in the given equation,

$$\sqrt{x} - 5 + \sqrt{x+5} = 0,$$

Rationalizing with respect to $\sqrt{x+5}$,

$$(\sqrt{x}-5+\sqrt{x+5})(\sqrt{x}-5-\sqrt{x+5})=0.$$

Expanding, $$x-10\sqrt{x}+25-(x+5)=0.$$

Simplifying, $$\sqrt{x}-2=0.$$

Rationalizing, $$(\sqrt{x}-2)(\sqrt{x}+2)=0,$$

or $$x-4=0.$$

In squaring the first time, the factor $\sqrt{x}-5-\sqrt{x+5}$ is introduced; and in squaring the second time the factor $\sqrt{x}+2$, which is $\frac{1}{10}$ of the product $(\sqrt{x}+5+\sqrt{x+5})(\sqrt{x}+5-\sqrt{x+5})$, or $10\sqrt{x}+20$, is introduced.

284. It follows from the preceding discussion that:

If a radical equation is rationalized by multiplying by a rationalizing factor or by squaring, the resulting equation has all the roots of the given equation.

Whether the given radical equation has all the roots of the rational equation depends upon the method agreed upon of *verifying* radical equations.

As illustrated above, each of the equations

$$\sqrt{x}-5+\sqrt{x+5}=0, \quad (1)$$

$$\sqrt{x}-5-\sqrt{x+5}=0, \quad (2)$$

$$\sqrt{x}+5+\sqrt{x+5}=0, \quad (3)$$

and $$\sqrt{x}+5-\sqrt{x+5}=0 \quad (4)$$

is rationalized by finding the product of them all, which is $x-4=0$. Hence, the equation $x-4=0$ has the roots of the four equations; that is, each equation has the root $x=4$, or has no root.

If $x=4$, $\sqrt{x}=\sqrt{4}$ and $\sqrt{x+5}=\sqrt{9}$. If $\sqrt{4}$ is either $+2$ or -2 and $\sqrt{9}$ is $+3$ or -3, the equations are verified as follows:

(1) becomes $$2-5+3=0,$$

(2) becomes $$2-5-(-3)=0,$$

(3) becomes $$-2+5+(-3)=0,$$

(4) becomes $$-2+5-3=0.$$

To prevent confusion in making numerical substitutions, it is customary to regard only the positive or principal square root in expressions like $\sqrt{4}$, $\sqrt{9}$, $\sqrt{5}$, etc. (See § 225.)

For example, by common agreement $+\sqrt{9}$ means $+(+3)$, or $+3$, $-\sqrt{9}$ means $-(+3)$, or -3; $+\sqrt{5}$ means the positive square root of 5; etc. With this understanding equations (2), (3), and (4) cannot be verified for $x=4$, and since they have no other root, they may in this sense be regarded as *impossible* equations.

When the equations given in this section have been freed from the radical signs, the resulting equations will be found to be simple equations. Other varieties of radical equations are treated subsequently.

EXAMPLES

1. Given $\sqrt{2x} + 4 = 10$, to find the value of x.

SOLUTION

$$\sqrt{2x} + 4 = 10.$$

Transposing, $\sqrt{2x} = 6.$

Squaring, $2x = 36.$

$\therefore x = 18.$

2. Given $\sqrt{x-7} + \sqrt{x} = 7$, to find the value of x.

SOLUTION

$$\sqrt{x-7} + \sqrt{x} = 7.$$

Transposing, $\sqrt{x-7} = 7 - \sqrt{x}.$

Squaring, $x - 7 = 49 - 14\sqrt{x} + x.$

Transposing and combining, $14\sqrt{x} = 56.$

Dividing by 14, $\sqrt{x} = 4.$

Squaring, $x = 16.$

3. Given $\sqrt{14 + \sqrt{1 + \sqrt{x+8}}} = 4$, to find the value of x.

SOLUTION

$$\sqrt{14 + \sqrt{1 + \sqrt{x+8}}} = 4.$$

Squaring, $14 + \sqrt{1 + \sqrt{x+8}} = 16.$

Transposing, etc., $\sqrt{1 + \sqrt{x+8}} = 16 - 14 = 2.$

Squaring, $1 + \sqrt{x+8} = 4.$

Transposing, etc., $\sqrt{x+8} = 4 - 1 = 3.$

Squaring, $x + 8 = 9.$

$\therefore x = 9 - 8 = 1.$

VERIFICATION. $\sqrt{14 + \sqrt{1 + \sqrt{1+8}}} = \sqrt{14 + \sqrt{1+3}}$

$= \sqrt{14+2} = 4.$

4. Given $\dfrac{2\sqrt{ax}-b}{2\sqrt{ax}+b}=\dfrac{3\sqrt{ax}-2b}{3\sqrt{ax}+3b}$, to find the value of x.

SOLUTION

$$\frac{2\sqrt{ax}-b}{2\sqrt{ax}+b}=\frac{3\sqrt{ax}-2b}{3\sqrt{ax}+3b}.$$

Reducing to mixed numbers, $1-\dfrac{2b}{2\sqrt{ax}+b}=1-\dfrac{5b}{3\sqrt{ax}+3b}.$

Canceling, $-\dfrac{2b}{2\sqrt{ax}+b}=-\dfrac{5b}{3\sqrt{ax}+3b}.$

Dividing by $-b$, $\dfrac{2}{2\sqrt{ax}+b}=\dfrac{5}{3\sqrt{ax}+3b}.$

Clearing of fractions, etc., $6\sqrt{ax}-10\sqrt{ax}=5b-6b.$

$$\therefore\ \sqrt{ax}=\frac{b}{4}.$$

Squaring, etc., $$x=\frac{b^2}{16a}.$$

SUGGESTIONS. — 1. *When the equation is free from fractions, transpose so that the radical term, if there is but one, or the more complex radical term, if there is more than one, may constitute one member of the equation; then raise each member to a power of the same degree as that radical. Simplify the result. If the equation is not freed from radicals by the first involution, proceed again as at first.*

2. *It is sometimes convenient to rationalize denominators before clearing of fractions or involving.*

Solve the following equations:

5. $\sqrt{x+11}=4.$

6. $\sqrt{x+5}=3.$

7. $\sqrt{x-a^2}=b.$

8. $\sqrt[3]{x-1}=2.$

9. $\sqrt[3]{x-a^3}=a.$

10. $\sqrt[3]{x}+b=a.$

11. $1+\sqrt{x}=5.$

12. $1+2\sqrt{x}=7-\sqrt{x}.$

13. $\sqrt{x+16}-\sqrt{x}=2.$

14. $\sqrt{2x}-\sqrt{2x-15}=1.$

15. $\sqrt{x^2+x+1}=2-x.$

16. $3\sqrt{x^2-9}=3x-3.$

17. $\sqrt{x}+2=\sqrt{x+32}.$

18. $5-\sqrt{x+5}=\sqrt{x}.$

19. $2\sqrt{x}-x=x-8\sqrt{x}$.

20. $\sqrt{4x^2+6x-10}=2x+4$.

21. $\sqrt{x^2-5x+7}+2=x$.

22. $4-\sqrt{4-8x+9x^2}=3x$.

23. $\sqrt{2(1-x)(3-2x)}-1=2x$.

24. $\sqrt{2x-1}+\sqrt{2x+4}=5$.

25. $\sqrt{3x-5}+\sqrt{3x+7}=6$.

26. $\sqrt{16x+3}+\sqrt{16x+8}=5$.

27. $\sqrt{9x+8}+\sqrt{9x}-4=0$.

28. $\sqrt{1+x\sqrt{x^2+12}}=1+x$.

29. $\sqrt{7+3\sqrt{5x-16}}-4=0$.

30. $2x+\sqrt{4x^2-\sqrt{16x^2-7}}=1$.

31. $\sqrt{7+\sqrt{1+\sqrt{4+\sqrt{1+2\sqrt{x}}}}}=3$.

32. $\dfrac{5}{\sqrt{3x+2}}=\sqrt{3x+2}+\sqrt{3x-1}$.

33. $\dfrac{\sqrt{2x}+9}{\sqrt{2x}-7}=\dfrac{\sqrt{2x}+20}{\sqrt{2x}-12}$.

34. $\dfrac{\sqrt{x}+18}{\sqrt{x}+2}=\dfrac{32}{\sqrt{x}+6}+1$.

35. $\dfrac{\sqrt{x-1}}{\sqrt{x+5}}=\dfrac{\sqrt{x-3}}{\sqrt{x-1}}$.

36. $\dfrac{\sqrt{x}-6}{\sqrt{x}-1}=\dfrac{\sqrt{x}-8}{\sqrt{x}-5}$.

37. $\dfrac{\sqrt{x-3}}{\sqrt{x+1}}=\dfrac{\sqrt{x-4}}{\sqrt{x-2}}$.

38. $\dfrac{\sqrt{2x}+6}{\sqrt{2x}+4}=\dfrac{\sqrt{2x}+2}{\sqrt{2x}+1}$.

39. $\dfrac{\sqrt{11x}+\sqrt{2x+3}}{\sqrt{11x}-\sqrt{2x+3}}=\dfrac{8}{3}$.

40. $\dfrac{2\sqrt{2x}+4}{2\sqrt{2x}-4}=\dfrac{3\sqrt{x+1}+9}{3\sqrt{x+1}-9}$.

41. $\dfrac{\sqrt{\sqrt{5x}-9}}{\sqrt{\sqrt{5x}+11}}=\dfrac{\sqrt{\sqrt{5x}-21}}{\sqrt{\sqrt{5x}-16}}$.

42. $\dfrac{\sqrt{4x+3}+2\sqrt{x-1}}{\sqrt{4x+3}-2\sqrt{x-1}}=5$.

43. $\dfrac{\sqrt{x+1}-\sqrt{x-1}}{\sqrt{x+1}+\sqrt{x-1}}=\dfrac{1}{2}$.

44. $\dfrac{x-3}{\sqrt{x}-\sqrt{3}}=\dfrac{\sqrt{x}+\sqrt{3}}{2}+2\sqrt{3}$.

45. $\dfrac{\sqrt{19x}+\sqrt{2x+11}}{\sqrt{19x}-\sqrt{2x+11}}=2\frac{1}{6}$.

46. $2\sqrt{x}-\sqrt{4x-22}-\sqrt{2}=0$.

47. $1+\sqrt{(3-5x)^2+16}=2(3-x)$.

48. $\sqrt{x}+\sqrt{x-\sqrt{a^2-x}}=\sqrt{a}$.

49. $\sqrt{x}+\sqrt{x-(a-b)^2}=a+b$.

50. $\sqrt{mn-x}-\sqrt{x}\sqrt{mn-1}=\sqrt{mn}\sqrt{1-x}$.

51. $a\sqrt{x}-b\sqrt{x}=a^2+b^2-2ab$.

52. $\sqrt{5ax-9a^2}+a=\sqrt{5ax}$.

53. $\sqrt{x+3a}=\dfrac{6a}{\sqrt{x+3a}}-\sqrt{x}$.

54. $\sqrt{2x}-\sqrt{2x-7}=\dfrac{3}{\sqrt{2x-7}}$.

55. $\sqrt{2x+\sqrt{10x+1}}=\sqrt{2x}+1$.

56. $\dfrac{\sqrt{x+a}+\sqrt{x-a}}{\sqrt{x+a}-\sqrt{x-a}}=2+\dfrac{\sqrt{x^2-a^2}}{a}$.

57. $\sqrt{x}+\sqrt{2x}+\sqrt{3x}=\sqrt{a}$.

SOLUTION

$$\sqrt{x}+\sqrt{2x}+\sqrt{3x}=\sqrt{a}.$$

Factoring, $$\sqrt{x}(1+\sqrt{2}+\sqrt{3})=\sqrt{a}.$$

Multiplying by $1+\sqrt{2}-\sqrt{3}$,

$$\sqrt{x}(1+2\sqrt{2}+2-3)=\sqrt{a}(1+\sqrt{2}-\sqrt{3}).$$

$$\sqrt{x}\cdot 2\sqrt{2}=\sqrt{a}(1+\sqrt{2}-\sqrt{3}).$$

Squaring, $$8x=a(1+\sqrt{2}-\sqrt{3})^2.$$

$\therefore$ $$x=\frac{a}{8}(1+\sqrt{2}-\sqrt{3})^2.$$

58. $\sqrt{2x}+\sqrt{3x}+\sqrt{5x}=\sqrt{m}$.

59. $\sqrt{2x}+\sqrt{3x}-\sqrt{5x}=\sqrt{c}$.

60. $\sqrt{x-a}+\sqrt{2(x-a)}=\sqrt{3x+a\sqrt{2}}$.

61. $\sqrt{x-1}+\sqrt{2x-2}=\sqrt{3x-3}+\sqrt{2}$.

62. $\sqrt{2x-3}+\sqrt{4x-6}=\sqrt{2x}+\sqrt{x}$.

REVIEW

Reduce the following to their simplest forms:

1. $\dfrac{6x^3-7x^2-5x}{9x^3-25x}$.

2. $\dfrac{8x^2+18x-5}{12x^2+5x-2}$.

3. $\dfrac{a^2x^2-a\sqrt{x}+x}{\sqrt{x}}$.

4. $\dfrac{a^2-2a\sqrt{b}+b}{a-\sqrt{b}}$.

5. $\dfrac{\sqrt{2}-\sqrt{3}-\sqrt{5}}{\sqrt{2}+\sqrt{3}+\sqrt{5}}$.

6. $\dfrac{2-\sqrt{5}}{2+\sqrt{5}}+\dfrac{2\sqrt{3}}{\sqrt{243}}$.

7. $\dfrac{x-y}{x+y}-\dfrac{y+x}{y-x}-\dfrac{4x^2y^2}{x^4-y^4}$.

8. $\dfrac{\sqrt{2}-\sqrt{3}}{\sqrt{2}+\sqrt{3}}-\dfrac{\sqrt{2}+\sqrt{3}}{\sqrt{2}-\sqrt{3}}$.

9. $\dfrac{x+\sqrt{xy}+y}{\sqrt{x}+\sqrt{y}}+\dfrac{x\sqrt{x}+y\sqrt{y}}{x+y}$.

10. $\dfrac{1}{\sqrt{a}+\sqrt{b}}-1+\dfrac{1}{\sqrt{a}-\sqrt{b}}$.

11. $\dfrac{\sqrt{1+x^2}-\sqrt{1-x^2}}{\sqrt{1+x^2}+\sqrt{1-x^2}}$.

12. $\dfrac{1}{1-\sqrt{2}x}+\dfrac{1}{1+\sqrt{2}x}+\dfrac{1}{1-2x}$.

13. $\dfrac{x+\sqrt{x^2-a^2}}{x-\sqrt{x^2-a^2}}-\dfrac{x-\sqrt{x^2-a^2}}{x+\sqrt{x^2-a^2}}$.

14. $\dfrac{\sqrt{a+1}+\sqrt{a-1}}{\sqrt{a+1}-\sqrt{a-1}}-\dfrac{\sqrt{a+1}-\sqrt{a-1}}{\sqrt{a+1}+\sqrt{a-1}}$.

15. $\dfrac{a^2-2ax-3x^2}{3a^2+5ax+2x^2}\times\dfrac{6a^2+7ax+2x^2}{a^2-4ax+3x^2}$.

16. $\dfrac{a^2-b}{a^2-2a\sqrt{b}+b}\times\dfrac{a^2-4a\sqrt{b}+4b}{a^2+2a\sqrt{b}+b}$.

17. $\left(1-\dfrac{a}{b}\right)\div\left(1+\sqrt{\dfrac{a}{b}}\right)$.

18. $\dfrac{\dfrac{1+a+a^2}{1+\sqrt{a}+a}}{\dfrac{1-\sqrt{a}+a}{1-\sqrt{a}}}$.

19. $1\div\left(\sqrt{\dfrac{a}{b}}-\sqrt{\dfrac{b}{a}}\right)+\dfrac{\sqrt{ab}}{a+b}$.

20. $\dfrac{\left(\dfrac{a}{\sqrt{x}}+\dfrac{\sqrt{x}}{a}\right)\left(\dfrac{a}{\sqrt{x}}-\dfrac{\sqrt{x}}{a}\right)}{\left(\dfrac{a}{\sqrt{x}}-\dfrac{\sqrt{x}}{a}\right)\left(\dfrac{a}{\sqrt{x}}-\dfrac{\sqrt{x}}{a}\right)}$.

Expand:

21. $(a^3 - b^2)^3$.

22. $(2a - 3b)^4$.

23. $\left(\frac{a}{3} - \frac{b}{2}\right)^3$.

24. $\left(ax + \frac{1}{a}\right)^5$.

25. $(a^{-2} + a^{-1})^2$.

26. $(a^{-1} + b)^4$.

27. $(a^{\frac{1}{2}} - b^{\frac{1}{2}})^6$.

28. $(a^{\frac{1}{2}} - b^{-\frac{1}{2}})^4$.

29. $(a^{-\frac{1}{3}} - b^{-\frac{1}{3}})^6$.

30. $(a^{\frac{1}{3}} + b^{\frac{1}{2}})^6$.

31. $(a - \sqrt{b})^4$.

32. $(\sqrt{x} + \sqrt{y})^6$.

33. $(\sqrt{2} - \sqrt{3})^4$.

34. $(\sqrt{5} - 2)^6$.

35. $(\sqrt[3]{4} - \sqrt[3]{2})^3$.

36. $(\sqrt{2} - \sqrt[3]{2})^6$.

Extract the square root of

37. $\frac{9x^4}{4} + 3x^3 - x^2 - \frac{4x}{3} + \frac{4}{9}$.

38. $\frac{x^2}{4} + 4y^2 + \frac{z^2}{16} - 2xy + \frac{xz}{4} - yz$.

39. $a^2 + 12a^{\frac{3}{2}}b^{\frac{1}{2}} + 54ab + 108a^{\frac{1}{2}}b^{\frac{3}{2}} + 81b^2$.

40. $1 + 2\sqrt{x} - x - 2x\sqrt{x} + x^2$.

41. $a + 4b + 9c - 4\sqrt{ab} + 6\sqrt{ac} - 12\sqrt{bc}$.

42. $x^2 - 4x\sqrt{xy} + 6xy - 4y\sqrt{xy} + y^2$.

43. $x^2 - 12x^{\frac{5}{3}}y^{\frac{1}{2}} + 60x^{\frac{4}{3}}y - 160xy^{\frac{3}{2}} + 240x^{\frac{2}{3}}y^2 - 192x^{\frac{1}{3}}y^{\frac{5}{2}} + 64y^3$.

Find the square root of

44. 81234169.

45. 64064016.

46. .00022801.

47. .1 to four places.

48. $56 + 14\sqrt{15}$.

49. $47 - 12\sqrt{15}$.

50. $62 + 20\sqrt{6}$.

51. $51 - 36\sqrt{2}$.

Extract the cube root of

52. $x^3 - 9x + 27x^{-1} - 27x^{-3}$.

53. $27x^3 + 27x^2 - 5 + \frac{1}{3x^2} - \frac{1}{27x^3}$.

54. $x^3 + 3x^2\sqrt{x} - 5x\sqrt{x} + 3\sqrt{x} - 1$.

55. Find the cube root of $2\sqrt{2} - 6\sqrt[3]{2} + 3\sqrt{2}\sqrt[3]{4} - 2$.

56. Find the cube root of $(a + 12b + 3c)\sqrt{a} - (6a + 8b + 6c)\sqrt{b} - (3a + 12b + c)\sqrt{c} + 12\sqrt{abc}$.

57. Extract the cube root of 510,082,399.

58. Extract the cube root of 1,042,590,744.

59. Extract the cube root of 2 to three decimal places.

60. Find the first four terms of $\sqrt{1 + x - x^2}$.

61. Find the first three terms of $\sqrt[3]{1 + x^3}$.

62. Find the fourth root of

$$a^6 - 4a^4\sqrt{ab^{-1}} + 6a^3b^{-1} - 4ab^{-1}\sqrt{ab^{-1}} + b^{-2}.$$

63. Find the sixth root of

$$8 - 48\sqrt{a} + 120a - 160a\sqrt{a} + 120a^2 - 48a^2\sqrt{a} + 8a^3.$$

If $a^m \times a^n = a^{m+n}$ for all values of m and n, show that

64. $a^{-2} = \frac{1}{a^2}$.

65. $a^{\frac{3}{2}} = \sqrt{a^3} = (\sqrt{a})^3$.

66. $2a^{-\frac{1}{3}} = \frac{2\sqrt[3]{a^2}}{a}$.

67. $(ab)^0 = 1$.

68. $(abc)^3 = a^3b^3c^3$.

69. $\left(\frac{a}{b}\right)^3 = \frac{a^3}{b^3}$.

Find the values of the following:

70. $16^{\frac{3}{4}}$.

71. $27^{\frac{2}{3}}$.

72. $8^{-\frac{2}{3}}$.

73. $(a^4x^4)^{\frac{3}{2}}$.

74. $(b^2y^4)^{-\frac{3}{2}}$.

75. $(a^nb^n)^{-\frac{1}{n}}$.

76. $\left(\frac{32}{243}\right)^{-\frac{3}{5}}$.

77. $\left(\frac{36}{49}\right)^{-\frac{3}{2}}$.

78. $\left(-\frac{8}{27}\right)^{-\frac{2}{3}}$.

79. For what values of n is $(a - b)^n = (b - a)^n$?

Simplify and express with positive exponents:

80. $(36a^{-3} \div 25a^{-2})^{-\frac{1}{2}}$.

81. $(8a^3x^6 \times 64a^{-4}x^{-5})^{-\frac{1}{3}}$

82. $(a^{\frac{1}{2}}b^{\frac{1}{4}})^{\frac{1}{3}} \div (a^{\frac{1}{6}}b^{\frac{1}{4}})^2$.

83. $(\sqrt{a^3x^{-3}} \div \sqrt[3]{a^2x^{-2}})^{\frac{3}{5}}$.

84. $(\sqrt{a^{-1}b^4} \div \sqrt{a^2b})^{-\frac{1}{3}}$.

85. $(\sqrt{a} \div \sqrt[3]{a}) \div \sqrt[4]{a}$.

86. $\dfrac{a-b}{a^{\frac{1}{3}}-b^{\frac{1}{3}}}-\dfrac{a+b}{a^{\frac{1}{3}}+b^{\frac{1}{3}}}+\dfrac{2\,a^{\frac{1}{3}}b}{a^{\frac{2}{3}}-b^{\frac{2}{3}}}$.

87. $\dfrac{1+a^{-1}b}{1-a^{-1}b}\div\left(\dfrac{1+ab^{-1}+a^2b^{-2}}{1-ab^{-1}+a^2b^{-2}}\times\dfrac{1+a^{-3}b^3}{1-a^{-3}b^3}\right)$.

Solve the following equations:

88. $\dfrac{x+1}{x-1}-\dfrac{x-1}{x+1}=\dfrac{3-5\,x}{1-x^2}$.

89. $\dfrac{7-2\,x}{10}-\dfrac{2\,x-1}{5}+\frac{1}{2}\,x=\dfrac{5\,x-6\frac{1}{3}}{2\,x}-\dfrac{17+3\,x}{30}$.

90. $\dfrac{4\,x-17}{9}-\dfrac{3\frac{2}{3}-22\,x}{33}=x-\dfrac{6}{x}\left(1-\dfrac{x^2}{54}\right)$.

91. $\begin{cases}\dfrac{3\,x-5\,y}{3}-\dfrac{2\,x-8\,y-9}{12}=\dfrac{y}{2}+\dfrac{7}{12},\\ \dfrac{7}{2}\left(\dfrac{x}{7}+\dfrac{y}{4}+1\frac{1}{3}\right)-\dfrac{10}{3}\left(4\,x-\dfrac{y}{8}-24\right)=0.\end{cases}$

92. $\begin{cases}3\,x+1=2\,y,\\ (x+5)(y+7)=(x+1)(y-9)+112.\end{cases}$

93. $\begin{cases}x-y=3,\\ (x+1)(x+2)-(x-2)(x+1)=11\,y+2.\end{cases}$

Simplify and express with positive exponents:

94. $\dfrac{\left(\dfrac{a}{27}\div\dfrac{a^{-2}}{8}\right)^{-\frac{2}{3}}-x^2}{\dfrac{3\,a^{-1}+2\,x}{2}}$.

95. $\{a^{-2}[a^{\frac{3}{5}}(a^{\frac{3}{5}})^{\frac{1}{3}}]^5\}^{\frac{5}{2}}$.

96. $\left[\dfrac{\left(\dfrac{a^3b}{x^2y}\right)^{\frac{1}{2}}}{\left(\dfrac{a^3b^2}{xy^2}\right)^{\frac{1}{3}}}\right]^6-\dfrac{(ax^{-1})^3}{b}$.

97. $\left[\dfrac{x^{-\frac{1}{2}}y^{-\frac{2}{3}}}{x^{-\frac{1}{6}}y^{-1}}\div\dfrac{x^{-2}y^2}{(xy)^{-3}}\right]^{-3}$.

98. $\{(a^{\frac{1}{2}}b^{\frac{5}{2}})^{\frac{1}{5}}\div(a^{-\frac{1}{2}}b)^{-2}\}^{\frac{1}{9}}$.

99. $\dfrac{a+b}{a^{\frac{1}{3}}-b^{\frac{1}{2}}}-\dfrac{a-b}{a^{\frac{1}{3}}+b^{\frac{1}{3}}}$.

100. $\dfrac{\left[-\dfrac{a^{-1}+b^{-1}}{a^{-1}-b^{-1}}\times(a^2-b^2)\right]^{\frac{1}{2}}}{\dfrac{b+a}{ab}}$.

QUADRATIC EQUATIONS

285. 1. What is the value of x in the equation $3x = 24$? What kind of an equation is it?

2. What powers of x are found in the equation $x^2 + 2x = 3$? Which is the higher power?

3. What is the value of x in the equation $x^2 = 9$? How many values has x? How do they compare numerically?

4. Factor $x^2 - 5x + 6 = 0$, and so find the values of x. How many values has x?

286. An integral equation that contains the *square* of the unknown number, but no higher power, is called a **Quadratic Equation,** or an equation of the *second degree.*

It is evident, therefore, that quadratic equations may be of two kinds — those which contain only the second power of the unknown number, and those which contain both the second and first powers.

$x^2 = 15$ and $ax^2 + bx = c$ are quadratic equations.

PURE QUADRATICS

287. An equation that contains only the second power of the unknown number is called a **Pure Quadratic.**

$ax^2 = b$ and $ax^2 - cx^2 = bc$ are pure quadratics.

Pure Quadratics are also called *Incomplete Quadratics,* because they lack the first power of the unknown number.

288. Since pure quadratics contain only the second power of the unknown number, they may be reduced to the general form $ax^2 = b$, in which a represents the coefficient of x^2, and b the sum of the terms that do not involve x^2.

289. PRINCIPLES. — 1. *If the square root of each member of a quadratic equation is extracted and the second member of the resulting equation is given the sign* $\pm$, *the resulting equation is equivalent to the given equation.*

2. *Every pure quadratic equation has two roots numerically equal, but having opposite signs.*

For the equation $A^2 = B^2$, or $A^2 - B^2 = 0$, or $(A - B)(A + B) = 0$, is equivalent to the two equations

$$A - B = 0 \text{ and } A + B = 0,$$

or

$$A = +B \text{ and } A = -B;$$

that is, to the two equations $A = \pm B$.

EXAMPLES

1. Given $10x^2 = 99 - x^2$, to find the value of x.

SOLUTION

$$10x^2 = 99 - x^2.$$

Transposing, etc., $11x^2 = 99.$

Dividing by 11, $x^2 = 9.$

Extracting the square root of each member, Ax. 7,

$$x = \pm 3.$$

Strictly speaking, the last equation should be $\pm x = \pm 3$, which stands for the equations $+x = +3$, $+x = -3$, $-x = -3$, and $-x = +3$. But since the last two equations may be derived from the first two, the first two express *all* the values of x. For convenience, the two expressions, $x = +3$ and $x = -3$, are written $x = \pm 3$.

Consequently, in extracting the square roots of the members of an equation, it will be sufficient to write the ambiguous sign before the root of *one* member.

2. Find the roots of the equation $3x^2 = -15$.

SOLUTION

$$3x^2 = -15.$$

Dividing by 3, $x^2 = -5.$

Extracting the square root, $x = \pm\sqrt{-5}.$

Solve the following equations:

3. $7x^2 - 25 = 5x^2 + 73$.

4. $(x+4)^2 = 8x + 25$.

5. $(a-x)^2 = (3x+a)(x-a)$.

6. $ax^2 = (a-b)(a^2-b^2) - bx^2$.

7. $a^2x^2 + 2ax^2 = (a^2-1)^2 - x^2$.

8. $(x+2)^2 - 4(x+2) = 4$.

9. $\dfrac{x-8}{6} = \dfrac{6}{x+8}$.

10. $\dfrac{1}{1-x} + \dfrac{1}{1+x} = 2\frac{2}{3}$.

11. $\dfrac{x}{12} + \dfrac{x^2-15}{5x} = \dfrac{x}{5}$.

12. $\dfrac{x+3}{x-3} + \dfrac{x-3}{x+3} = 4$.

13. $\dfrac{x-2}{x+1} + \dfrac{x+2}{x-1} = -1$.

14. $\dfrac{x}{a+b} - \dfrac{a-b}{x} = 0$.

15. $\dfrac{x-3}{x-2} + \dfrac{x+3}{x+2} = 1\frac{7}{8}$.

16. $\dfrac{a}{x} + \dfrac{x}{a} = \dfrac{ab}{x}$.

17. $\sqrt{x^2+8} - \dfrac{6}{\sqrt{x^2+8}} = x$.

18. $x + \sqrt{x^2+m^2} = \dfrac{2m^2}{\sqrt{x^2+m^2}}$.

19. $\dfrac{x+a}{x+b} + \dfrac{x-a}{x-b} = \dfrac{a^2+b^2}{x^2-b^2}$.

20. $x + \sqrt{x^2+3} = \dfrac{6}{\sqrt{x^2+3}}$.

21. $\dfrac{24}{\sqrt{x^2+12}} - \sqrt{x^2+12} = x$.

22. $\dfrac{x+a}{x-a} + \dfrac{x-a}{x+a} = \dfrac{2a}{1-a}$.

23. $\dfrac{x+7}{x^2-7x} - \dfrac{x-7}{x^2+7x} = \dfrac{7}{x^2-73}$.

24. $x + \sqrt{x^2-a^2} = \dfrac{a^2}{\sqrt{x^2-a^2}}$.

25. $\sqrt{25-6x} + \sqrt{25+6x} = 8$.

26. $\dfrac{2x+\sqrt{4x^2-1}}{2x-\sqrt{4x^2-1}} = 4$.

27. $\dfrac{\sqrt{1+x}}{1+\sqrt{1+x}} + \dfrac{\sqrt{1-x}}{1+\sqrt{1-x}} = 0$.

28. $\dfrac{\sqrt{x^2+1} - \sqrt{x^2-1}}{\sqrt{x^2+1} + \sqrt{x^2-1}} = \dfrac{1}{2}$.

29. $\dfrac{1}{1+\sqrt{1-x}} - \dfrac{1}{\sqrt{1+x}+1} = \dfrac{1}{x}$.

30. $\dfrac{2}{x+\sqrt{2-x^2}}+\dfrac{2}{x-\sqrt{2-x^2}}=x.$

31. $\dfrac{\sqrt{x+2a}-\sqrt{x-2a}}{\sqrt{x-2a}+\sqrt{x+2a}}=\dfrac{x}{2a}.$

32. $\sqrt{\dfrac{x-a}{x+a}}+\sqrt{\dfrac{x+a}{x-a}}=a^2.$

Problems

1. If 25 is added to the square of a certain number, the sum is equal to the square of 13. What is the number?

2. What number is that whose square is equal to the difference of the squares of 25 and 20?

3. If a certain number is increased by 5 and also decreased by 5, the product of these results will be 75. What is the number?

4. Two numbers are as 3 to 4, and the sum of their squares is equal to the square of 15. What are the numbers?

5. Two numbers are as 4 to 3, and the sum of their squares is 400. What are the numbers?

6. A gentleman has two square rooms whose sides are as 2 to 3. He finds that it takes 9 square yards more than twice as much carpeting for the larger room as for the smaller. What is the length of a side of each room?

7. A man who owns a field 80 rods square sells one fourth of it. If the part he sells is also a square, how long is each of its sides?

8. A man had a rectangular field whose width was $\frac{2}{3}$ of its length. He built a fence across it so that one of the two parts thus formed was a square. If the square field contained 10 acres, what were the dimensions of the original field?

9. How many rods of fence will inclose a square garden whose area is $2\frac{1}{2}$ acres?

10. The sum of two numbers is 10, and their product is 21. What are the numbers?

Suggestion. — Represent the numbers by $5+x$ and $5-x$.

11. The sum of two numbers is 16, and their product is 55. What are the numbers?

12. The sum of two numbers is 26, and their product is 69. What are the numbers?

13. The sum of two numbers is 5, and their product is -14. What are the numbers?

14. Factor $a^2 + 17a + 60$ by the method suggested in the preceding problems.

SUGGESTION. $+60$ is the product of the arithmetical terms, and $+17$ is their algebraic sum.

15. Separate $a^2 + 2a - 2$ into two factors.

16. Separate $x^2 - 2x - 1$ into two factors.

17. Divide 24 into two parts whose product is 143.

18. The length of a ten-acre field was 4 times its width. What were its dimensions?

19. The sum of the squares of two numbers is 394, and the difference of their squares is 56. What are the numbers?

20. A man has two square fields that together contain $51\frac{1}{4}$ acres. If the side of one is as much longer than 50 rods as that of the other is shorter than 50 rods, what are the dimensions of each field?

AFFECTED QUADRATICS

290. A quadratic equation that contains both the second and the first powers of one unknown number is called an **Affected Quadratic.**

$x^2 + 3x = 10$, $4x^2 - x + 1 = 0$, and $ax^2 + bx + c = 0$ are affected quadratics.

Affected Quadratics are also called *Complete Quadratics.*

291. Since affected quadratic equations contain both the second and first powers of the unknown number, they may always be reduced to the general form of $ax^2 + bx + c = 0$, in which a, b, and c may represent any numbers whatever.

The term c is sometimes called the *absolute term.*

292. To solve affected quadratics by factoring.

Reduce the equations to the form $ax^2 + bx + c = 0$, and solve by the methods of § 141.

Solve the following equations by factoring:

1. $x^2 - 5x + 6 = 0$.
2. $x^2 - 5x = 24$.
3. $x^2 - 1 = 3(x + 1)$.
4. $2x^2 - 7x + 3 = 0$.
5. $2x^2 - x - 3 = 0$.
6. $3x^2 - 2x - 8 = 0$.
7. $10x^2 - 27x + 5 = 0$.
8. $6(x^2 + 1) = 13x$.
9. $x^2 - (a - b)x = ab$.
10. $2x^2 - 3ax - 2a^2 = 0$.
11. $3(b^2 + x^2) = 10bx$.
12. $x^2 - 2ax + (a + 1)(a - 1) = 0$.

13. Solve the equation $x^2 + 100x + 2491 = 0$.

SOLUTION

Since, § 99, 100 is the sum of the arithmetical terms of the factors of $x^2 + 100x + 2491$, and their product is 2491, $50 + p$ and $50 - p$ may represent the two factors of 2491 whose sum is 100.

Then, $(50 + p)(50 - p) = 2491$.

Expanding, $2500 - p^2 = 2491$.

Transposing, etc., $p^2 = 9$.

$\therefore$ $p = \pm 3$.

$50 + p = 53, \quad 50 - p = 47$.

Therefore, § 130, $x^2 + 100x + 2491 = (x + 53)(x + 47) = 0$,

and $x = -53$ or -47.

Since $p = -3$ gives no new values of $50 + p$ and $50 - p$, the negative value of p may be disregarded.

14. Solve the equation $x^2 + 3x - 208 = 0$.

SOLUTION

$x^2 + 3x - 208 = 0$.

Let $(\frac{3}{2} + p)(\frac{3}{2} - p) = -208$.

Expanding, $\frac{9}{4} - p^2 = -208$.

Solving, $p = \pm \frac{29}{2}$.

$\frac{3}{2} + p = 16, \quad \frac{3}{2} - p = -13$.

Factoring the given equation,

$(x + 16)(x - 13) = 0$.

$x = -16$ or $+13$.

Solve the following equations:

15. $x^2 + 10x + 21 = 0$.
16. $x^2 + 12x - 28 = 0$.
17. $x^2 - 20x + 51 = 0$.
18. $x^2 + 60x + 891 = 0$.
19. $x^2 - 44x + 403 = 0$.
20. $x^2 + 20x - 629 = 0$.
21. $x^2 - 30x - 2275 = 0$.
22. $x^2 + 24x + 119 = 0$.
23. $x^2 + 2x - 323 = 0$.
24. $x^2 - 6x - 475 = 0$.
25. $x^2 + 8x - 768 = 0$.
26. $x^2 + 3x - 418 = 0$.
27. $x^2 + 5x - 546 = 0$.
28. $x^2 + x - 756 = 0$.
29. $x^2 - x - 506 = 0$.
30. $x^2 + 2x - 168 = 0$.
31. $x^2 + 6x - 135 = 0$.
32. $x^2 + 3x - 154 = 0$.
33. $x^2 + 5x + 2 = 0$.
34. $x^2 + x - 10 = 0$.
35. $x^2 - x - 1 = 0$.
36. $x^2 - 2x - 4 = 0$.
37. $x^2 - 3x - 9 = 0$.
38. $x^2 + 4x + 8 = 0$.
39. $x^2 + 6x + 14 = 0$.
40. $x^2 + 8x = -25$.

293. First method of completing the square.

1. What is the square of $x + 3$? of $x + 5$? of $x + 10$?

2. If $x^2 + 20x$ are the first two terms of the square of a binomial, what is the first term of the binomial?

3. Since $20x$ is twice the product of the two terms of the binomial, and the first term of the binomial is x, how may the second term of the binomial be found?

4. Since the second term of the binomial is 10, what must be added to $x^2 + 20x$ to *complete* the square of the binomial?

5. What term must be added to $x^2 + 6x$ to complete the square of some binomial? How is the term found?

6. What term must be added to $x^2 + 8x$ to complete the square? to $x^2 - 10x$? to $x^2 - 14x$?

7. What must be added to both members of the equation $x^2 - 12x = 13$ to make the first member a perfect square?

Examples

1. Solve the equation $x^2 - 6x = 40$.

PROCESS

$$x^2 - 6x = 40$$
$$x^2 - 6x + 9 = 49$$
$$x - 3 = \pm 7$$
$$x = +7 + 3 = 10$$
$$x = -7 + 3 = -4$$

EXPLANATION. — Completing the square in the first member by adding to each member the square of half the coefficient of x, $x^2 - 6x + 9 = 49$.

Extracting the square root of each member, $x - 3 = \pm 7$.

Using first the upper sign of ± 7, the simple equation $x - 3 = +7$ gives $x = 10$. Next using the lower sign of ± 7, the simple equation $x - 3 = -7$ gives $x = -4$.

Since each of the values 10 and -4 satisfies the given equation when substituted for x, $x = 10$ or -4.

2. Solve the equation $x^2 - 5x = 14$.

SOLUTION

$$x^2 - 5x = 14.$$

Completing the square, $x^2 - 5x + (\frac{5}{2})^2 = 14 + \frac{25}{4} = \frac{81}{4}$.

Extracting the square root, $x - \frac{5}{2} = \pm \frac{9}{2}$.

Taking the upper sign, $x = \frac{5}{2} + \frac{9}{2} = 7$.

Taking the lower sign, $x = \frac{5}{2} - \frac{9}{2} = -2$.

3. Solve the equation $10x^2 + 19x = 15$.

SOLUTION

$$10x^2 + 19x = 15.$$

Dividing by coefficient of x^2, $x^2 + \frac{19}{10}x = \frac{15}{10}$.

Completing the square, $x^2 + \frac{19}{10}x + (\frac{19}{20})^2 = \frac{15}{10} + \frac{361}{400} = \frac{961}{400}$.

Extracting the square root, $x + \frac{19}{20} = \pm \frac{31}{20}$.

Taking the upper sign, $x = -\frac{19}{20} + \frac{31}{20} = \frac{3}{5}$.

Taking the lower sign, $x = -\frac{19}{20} - \frac{31}{20} = -\frac{5}{2}$.

RULE. — *Transpose so that the terms containing x^2 and x are in one member of the equation and the known terms in the other, and make the coefficient of x^2 unity by dividing both members of the equation by the coefficient of x^2.*

Add to each member of the equation the square of half the coefficient of x, and extract the square root of each member.

Solve the two simple equations thus obtained.

Find the values of x in the following equations:

4. $x^2 - 2x = 143$.
5. $x^2 + 2x = 168$.
6. $x^2 - 4x = 117$.
7. $x^2 - 6x = 160$.
8. $x^2 - 8x = 180$.
9. $x^2 + 2x = 120$.
10. $x^2 + 6x = 187$.
11. $x^2 - 12x = 189$.
12. $x^2 + 10x = 171$.
13. $x^2 - 22x = 48$.
14. $x^2 + 30x = 31$.
15. $x^2 + 3x = 10$.
16. $x^2 - 3x = 180$.
17. $x^2 + 15x = 54$.
18. $x^2 - x = 930$.
19. $x^2 + 13x = 140$.
20. $x^2 - 11x + 28 = 0$.
21. $5x^2 - 3x - 2 = 0$.
22. $6x^2 - 5x - 6 = 0$.
23. $2x^2 + 9x = 35$.
24. $3x^2 - 7x = 10$.
25. $4x^2 - 19x = 5$.

26. $\dfrac{1}{x+1} + \dfrac{3}{x-1} = \dfrac{10}{3}$.

27. $\dfrac{x^2}{x-2} - \dfrac{3x-5}{2} = \dfrac{x+2}{5}$.

28. $\dfrac{1}{x+2} + \dfrac{x-2}{x} = \dfrac{x-7}{2x}$.

29. $x^2 + (m+n)(m-n) = 2mx$.

294. Other methods of completing the square.

By the previous method, when x^2 had a coefficient, the equation was divided by that coefficient so that the *term containing x^2 might always be a perfect square.* The same result may be secured in other ways.

Thus, if the term containing x^2 is $3x^2$, it may be made a perfect square by multiplying by 3; if $8x^2$, by multiplying by 2; if ax^2, by multiplying by a.

In the completed square $a^2x^2 + 2abx + b^2$, it is evident that the third term, b^2, is the square of the quotient obtained by dividing the second term by twice the square root of the first.

EXAMPLES

1. Solve the equation $5x^2 + 12x = 9$.

SOLUTION

$5x^2 + 12x = 9.$

Multiplying by 5, $25x^2 + 60x = 45.$

Completing the square, $25x^2 + 60x + 36 = 81.$

Extracting the square root, $5x + 6 = \pm 9.$

$5x = -6 \pm 9.$

$\therefore x = \frac{3}{5}$ or -3

EXPLANATION. — Since the coefficient of x^2 is not a perfect square, it may be made a perfect square by multiplying the members of the equation by 5.

Since, if to $25x^2 + 60x$ there were added such a term as would make the trinomial a perfect square, $60x$ would be equal to twice the product of the square root of $25x^2$ and the square root of this third term, the square root of the third term is obtained by dividing $60x$ by $2\sqrt{25x^2}$; that is, by $10x$. $60x \div 10x = 6$, and 6^2, or 36, added to both members completes the square of $(5x + 6)$.

2. Solve the equation $8x^2 - 10x = 3$.

SOLUTION

$8x^2 - 10x = 3.$

Multiplying by 2, $16x^2 - 20x = 6.$

Completing the square, $16x^2 - 20x + (\frac{5}{2})^2 = 6 + \frac{25}{4} = \frac{49}{4}.$

Extracting the square root, $4x - \frac{5}{2} = \pm \frac{7}{2}.$

$4x = \frac{5}{2} \pm \frac{7}{2} = 6$ or $-1.$

$\therefore x = \frac{3}{2}$ or $-\frac{1}{4}.$

GENERAL RULE. — *Transpose so that the terms containing x^2 and x are in one member of the equation and the known terms in the other.*

If the term containing the second power of the unknown number is not a perfect square, make it such by multiplying or dividing the members of the equation by some number.

Add to each member of the equation the square of the quotient obtained by dividing the term containing the first power of the unknown number by twice the square root of the term containing the second power.

Extract the square root of each member, and solve the two simple equations.

Solve the following equations:

3. $2x^2 - 5x = 42$.
4. $6x^2 - 5x + 1 = 0$.
5. $4x^2 - 12x = 27$.
6. $8x^2 + 20x = 48$.
7. $18x^2 + 6x = 4$.
8. $3x^2 + 4x = 95$.
9. $7x^2 + 2x = 32$.
10. $8x^2 - 18x = 5$.
11. $6x^2 + 5x = 4$.
12. $5x^2 + 6x = 8$.
13. Solve the equation $ax^2 + bx + c = 0$.

SOLUTION

$$ax^2 + bx + c = 0. \quad (1)$$

Transposing c, $$ax^2 + bx = -c. \quad (2)$$

Multiplying by a, $$a^2x^2 + abx = -ac. \quad (3)$$

Completing the square, $$a^2x^2 + abx + \frac{b^2}{4} = \frac{b^2}{4} - ac. \quad (4)$$

Multiplying by 4, $$4a^2x^2 + 4abx + b^2 = b^2 - 4ac. \quad (5)$$

Extracting the square root, $$2ax + b = \pm\sqrt{b^2 - 4ac}. \quad (6)$$

$$\therefore x = \frac{-b \pm \sqrt{b^2 - 4ac}}{2a}. \quad (7)$$

It is evident that (5) can be obtained by multiplying (2) by $4a$ and adding b^2 to both members. Hence, when a quadratic has the general form of (1), if the absolute term is transposed to the second member, as in (2), the square may be completed and fractions avoided by *multiplying by 4 times the coefficient of x^2 and adding to each member the square of the coefficient of x in the given equation.*

This is called the *Hindoo* method of completing the square.

Solve the following equations by the Hindoo method:

14. $2x^2 + 3x = 27$.
15. $2x^2 + 5x = 7$.
16. $2x^2 + 7x = -6$.
17. $3x^2 - 5x = 2$.
18. $4x^2 - 15x = 4$.
19. $5x^2 - 7x = -2$.
20. $6x^2 + 5x = -1$.
21. $4x^2 - x - 3 = 0$.
22. $5x^2 - 2x - 16 = 0$.
23. $3x^2 + 7x - 110 = 0$.
24. $2x^2 - 5x - 150 = 0$.
25. $3x^2 + x - 200 = 0$.
26. $15x^2 - 7x - 2 = 0$.
27. $7x^2 - 20x - 32 = 0$.

295. To solve quadratics by a formula.

Since every quadratic can be reduced to the general form $ax^2 + bx + c = 0$, in which a, b, and c represent any numbers whatever, and since the roots of this equation are

Ex. 13, § 294, $$x = \frac{-b \pm \sqrt{b^2 - 4ac}}{2a},$$

the values of the unknown number in any affected quadratic equation may be found by substituting the coefficient of x^2 for a, the coefficient of x for b, and the absolute term for c.

EXAMPLES

1. Solve the equation $6x^2 - x - 15 = 0$.

SOLUTION. — Since $a = 6$, $b = -1$, and $c = -15$, by the above formula,

$$x = \frac{1 \pm \sqrt{(-1)^2 - 4 \times 6(-15)}}{2 \times 6}$$

$$= \frac{1 \pm 19}{12} = \frac{5}{3} \text{ or } -\frac{3}{2}.$$

Solve by the above formula:

2. $2x^2 + 5x + 2 = 0$.
3. $3x^2 + 11x + 6 = 0$.
4. $6x^2 - 7x + 2 = 0$.
5. $4x^2 + 4x - 15 = 0$.
6. $2x^2 + 3x - 9 = 0$.
7. $2x^2 + 3x + 1 = 0$.
8. $3x^2 - 13x = 10$.
9. $7x^2 + 9x = 10$.
10. $2x^2 + 3x - 1 = 0$.
11. $3x^2 + 2x - 4 = 0$.
12. $x^2 - 5x = -3$.
13. $3x^2 - 6x = -2$.
14. $4x^2 - 3x - 2 = 0$.
15. $x^2 - 6x + 10 = 0$.
16. $x^2 + 4x + 12 = 0$.
17. $x^2 - 8x = -20$.

Solve by any method:

18. $x^2 - 6x + 5 = 0$.
19. $x^2 - 8x + 7 = 0$.
20. $2x^2 - 5x = 42$.
21. $7x^2 + 2x = 32$.
22. $x^2 - 12x = 64$.
23. $18x^2 + 6x = 4$.
24. $x^2 - x - 72 = 0$.
25. $4x^2 - 12x = 27$.

26. $x^2 = 3x + 10$.

27. $x^2 - 30 = 13x$.

28. $x^2 - 12x = 28$.

29. $x^2 - 50x = 159$.

30. $x^2 + 8x = 84$.

31. $x + \frac{1}{x} - \frac{5}{2} = 0$.

32. $\frac{x^2}{9} + \frac{x}{3} = \frac{35}{4}$.

33. $\frac{x}{9(x-1)} = \frac{x-2}{6}$.

34. $\frac{4}{x^2 - 2x + 1} = \frac{1}{4}$.

35. $\frac{x^2}{4} - \frac{2x}{3} = 28$.

36. $\frac{9}{2x+1} + \frac{3}{x-3} = 4$.

37. $\frac{3x-1}{x+2} = \frac{x+1}{x-2}$.

38. $\frac{1+x}{x-3} - \frac{x-1}{x-2} = \frac{4}{5}$.

39. $\frac{x}{x-5} - \frac{x-5}{x} = \frac{3}{2}$.

40. $\frac{x+7}{x+5} + \frac{x+12}{x+6} = 7$.

41. $\frac{x+4}{x-2} + 3 = \frac{x+3}{x-3}$.

42. $\frac{4x}{x-1} - \frac{x+3}{x} = 4$.

43. $\frac{x}{x+2} + \frac{1}{2} = \frac{x+2}{2x}$.

44. $\frac{5x}{x+7} + \frac{x+6}{x+3} = 3$.

45. $\frac{x+2}{x-7} - \frac{x+5}{x-5} = 1$.

46. $\frac{x-3}{x+4} + \frac{x+2}{x-2} = \frac{23}{10}$.

47. $\frac{2x+1}{1-2x} - \frac{5}{7} = \frac{x-8}{2}$.

Literal Equations

296. 1. Solve the equation $x^2 - \frac{a}{b}x - \frac{b}{a}x + 1 = 0$.

Solution

$$x^2 - \frac{a}{b}x - \frac{b}{a}x + 1 = 0.$$

Factoring, $$\left(x - \frac{a}{b}\right)\left(x - \frac{b}{a}\right) = 0.$$

Therefore, $$x = \frac{a}{b} \text{ or } \frac{b}{a}.$$

Solve by any of the preceding methods:

2. $x^2 - ax = ab - bx$.
3. $x^2 + ax = ac + cx$.
4. $x^2 = (m - n)\,x + mn$.
5. $x^2 - 3\,bx = 2\,ax - 6\,ab$.
6. $5\,x - 2\,ax = x^2 - 10\,a$.
7. $x^2 + 3\,bx = 5\,cx + 15\,bc$.
8. $2\,abx - x^2 = 14\,ab - 7\,x$.
9. $6\,x^2 + 3\,ax = 2\,bx + ab$.
10. $acx^2 - bcx - bd + adx = 0$.
11. $x^2 + 4\,mx + 3\,nx + 12\,mn = 0$.
12. $x^2 - 2\,ax = a^2$.
13. $x^2 + 4\,bx = b^2$.
14. $x^2 = 4\,ax - 2\,a^2$.
15. $x^2 - ax + a^2 = 0$.
16. $x^2 = bx + b^2$.
17. $x^2 + px + q = 0$.
18. $x^2 - 2\,x + a = 0$.
19. $4\,ax - x^2 = 3\,a^2$.
20. $x^2 - a = 1 + ax$.
21. $x^2 - b^2 = a^2 - bx$.
22. $21\,b^2 - 4\,bx = x^2$.
23. $5\,ax + 6\,a^2 = 6\,x^2$.
24. $x^2 - 1 = 4\,ax - a^2$.
25. $x^2 + b^2 = 4(a^2 + bx)$.
26. $\dfrac{x}{a} + \dfrac{a}{x} = \dfrac{5}{2}$.
27. $\dfrac{3\,c^2x^2}{4} + \dfrac{2\,cx}{3} = \dfrac{5}{3}$.
28. $\dfrac{2\,x}{x - a} - \dfrac{3\,a}{x + a} = 3$.
29. $\dfrac{a}{x - a} - 2 = \dfrac{2\,a}{x}$.
30. $\dfrac{1}{ax + 4} = 1 - \dfrac{ax - 4}{16}$.
31. $x^2 + \dfrac{a}{b}\,x = \dfrac{a + b}{b}$.
32. $x^2 + 2 = \dfrac{(2\,a^2 + 1)\,x}{a}$.
33. $x^2 - \dfrac{2\,x}{ab} = \dfrac{4\,(ab - 1)}{ab}$.
34. $x^2 - 2\,(a - b)\,x = 4\,ab$.
35. $x^2 + 2\,(a + 8)\,x = -\,32\,a$.
36. $x^2 + x + bx + b = ax + a$.
37. $2\,ax - a + 2\,bx - b = 2\,x^2 - x$.
38. $x^2 + 4\,(a - 1)\,x = 8\,a - 4\,a^2$.
39. $a\,(x - 2\,a + b) + a\,(x + a - b) = x^2 - (a - b)^2$.

40. $\dfrac{2a+x}{2a-x}+\dfrac{a-2x}{a+2x}=\dfrac{8}{3}$.

41. $\dfrac{1}{a-x}-\dfrac{1}{a+x}=\dfrac{3+x^2}{a^2-x^2}$.

42. $\dfrac{1}{x+a}+\dfrac{1}{x+b}=\dfrac{1}{a-b}$.

43. $\dfrac{x^2+1}{x}-\dfrac{a+b}{c}=\dfrac{c}{a+b}$.

44. $\dfrac{2x-a}{b}+3=\dfrac{4a}{2x-b}$.

45. $\dfrac{bx}{a-x}+b=\dfrac{a(x+2b)}{a+b}$.

46. $\sqrt{a+x}-\sqrt{a-x}=\sqrt{2x}$.

47. $\sqrt{x-a}+\sqrt{b-x}=\sqrt{b-a}$.

48. $\sqrt{x^2-b^2}=\sqrt{x+b}\,\sqrt{a+b}$.

49. $\sqrt{a-x}+\sqrt{b-x}=\sqrt{a+b-2x}$.

50. Solve and verify $\sqrt{x+1}+\sqrt{x-2}-\sqrt{2x-5}=0$.

SOLUTION

$$\sqrt{x+1}+\sqrt{x-2}-\sqrt{2x-5}=0.$$

Transposing, $$\sqrt{x+1}+\sqrt{x-2}=\sqrt{2x-5}.$$

Squaring, $$x+1+2\sqrt{x^2-x-2}+x-2=2x-5.$$

Simplifying, $$\sqrt{x^2-x-2}=-2.$$

Squaring, $$x^2-x-2=4.$$

Solving, $$x=-2 \text{ or } 3.$$

VERIFICATION. — Substituting -2 for x in the given equation,

$$\sqrt{-1}+\sqrt{-4}-\sqrt{-9}=0;$$

that is, $$\sqrt{-1}+2\sqrt{-1}-3\sqrt{-1}=0.$$

Therefore, -2 is a root of the given equation.

Substituting 3 for x in the given equation,

$$\sqrt{4}+\sqrt{1}-\sqrt{1}=0,$$

which is not true according to the convention adopted in the discussion in § 284. Hence, 3 is not to be regarded as a root of the given equation.

NOTE. — In the previous verification, when only positive square roots are taken, the second value obtained for x does not satisfy the given equation, yet this indicates no error in the process of rationalizing, for the equation can be verified by admitting negative square roots. But, as explained in § 283, it is more convenient to regard 3 as the root of the equation $\sqrt{x+1} - \sqrt{x-2} - \sqrt{2x-5} = 0$, which has for its first member one of the rationalizing factors of the given equation.

Solve and verify:

51. $8\sqrt{x} - 8x = \frac{3}{2}$.

52. $3x + \sqrt{x} = 5\sqrt{4x}$.

53. $x - 1 + \sqrt{x+5} = 0$.

54. $x - 5 - \sqrt{x-3} = 0$.

55. $\sqrt{4x+17} + \sqrt{x+1} - 4 = 0$.

56. $\sqrt{x-1} + \sqrt{2x-1} - \sqrt{5x} = 0$.

57. $\sqrt{2x-7} - \sqrt{2x} + \sqrt{x-7} = 0$.

58. $\sqrt{x+3} + \sqrt{4x+1} - \sqrt{10x+4} = 0$.

59. $\sqrt{6+x} + \sqrt{x} - \sqrt{10-4x} = 0$.

60. $\sqrt{4x-3} - \sqrt{2x+2} = \sqrt{x-6}$.

61. $\sqrt{2x+3} - \sqrt{x+1} = \sqrt{5x-14}$.

62. $\sqrt{3x-5} + \sqrt{x-9} = \sqrt{4x-4}$.

63. $\sqrt{x+a^2} - \sqrt{x-2a^2} = \sqrt{2x-5a^2}$.

PROBLEMS

297. 1. The sum of two numbers is 8, and their product is 15. Find the numbers.

SOLUTION

Let x = one number.

Then, $8 - x$ = the other.

Since their product is 15, $8x - x^2 = 15$.

Solving, $x = 3$ or 5,

and $8 - x = 5$ or 3.

Therefore, the numbers are 3 and 5.

2. A party hired a coach for $12. In consequence of the failure of three of them to pay, each of the others had to pay 20 cents more. How many persons were in the party?

SOLUTION

Let x = the number of persons.

Then, $x - 3$ = the number who paid,

$\frac{12}{x-3}$ = the number of dollars each paid,

and $\frac{12}{x}$ = the number of dollars each should have paid.

Therefore, $\frac{12}{x-3} - \frac{1}{5} = \frac{12}{x}$.

Solving, $x = 15$ or -12.

The second value of x is evidently inadmissible. Hence, the number of persons in the party was 15.

3. A cistern can be filled by two pipes in 24 minutes. If it takes the smaller pipe 20 minutes longer to fill the cistern than the larger pipe, in what time can the cistern be filled by each pipe?

SOLUTION

Let x = the number of minutes required by the larger pipe.

Then, $x + 20$ = the number of minutes required by the smaller.

Since $\frac{1}{x}$ = the part which the larger pipe fills in one minute,

and $\frac{1}{x+20}$ = the part which the smaller pipe fills in one minute,

and $\frac{1}{24}$ = the part which both pipes fill in one minute,

$$\frac{1}{x} + \frac{1}{x+20} = \frac{1}{24}.$$

Solving, $x = 40$ or -12.

Hence, the larger pipe can fill the cistern in 40 minutes, and the smaller in 60 minutes.

4. Divide 20 into two parts whose product is 96.

5. Divide 14 into two parts whose product is 45.

6. A man purchased a flock of sheep for $75. If he had paid the same sum for a flock containing 3 more, they would have cost $1.25 less per head. How many did he purchase?

7. A rectangular garden is 12 rods longer than it is wide, and contains 1 acre. What are its dimensions?

8. If each side of a square field were lengthened 4 rods, the area would be increased 136 square rods more than $\frac{1}{8}$ of it. What are the dimensions of the field?

9. A rectangular lot is 8 rods longer than it is wide. What are its dimensions, if it contains $1\frac{1}{2}$ acres?

10. In a column of 600 soldiers each file contained 3 men more than 9 times as many men as each rank. How broad and how deep was the column?

11. A party had a dinner that cost \$60. If there had been 5 persons more, the share of each would have been \$1 less. How many persons were there in the party?

12. A man worked a certain number of days for \$30. If he had received \$1 per day less than he did, he would have been obliged to work 5 days longer to earn the same sum. How many days did he work?

13. Find two consecutive numbers the sum of whose squares is 61.

14. Find two consecutive numbers the sum of whose reciprocals is $\frac{9}{20}$.

15. A picture that was 8 inches by 12 inches was placed in a frame of uniform width. If the area of the frame was equal to that of the picture, what was the width of the frame?

16. A merchant purchased a quantity of flour for \$100, and retailed it at a gain of \$1 per barrel. After he had sold \$100 worth of it, he had 5 barrels of it left. How many barrels did he buy, and at what price?

17. A merchant sold a hunting coat for \$11, and gained a per cent equal to the number of dollars the coat cost him. What was his per cent of gain?

18. A railway train traveled 5 miles an hour slower than usual and was one hour late in making a run of 280 miles. How many miles per hour did it travel?

19. A rectangular park 56 rods long and 16 rods wide was surrounded by a street of uniform width containing 4 acres. What was the width of the street?

20. A boatman rowed 8 miles up a stream and back in 3 hours. If the velocity of the current was 2 miles an hour, what was his rate of rowing in still water?

21. A man who owned a lot 56 rods long and 28 rods wide constructed a road around it, thereby decreasing the area of the lot 2 acres. What was the width of the road?

22. A man bought two lots of cloth and paid 96 shillings for each. There were 20 yards in all, and the number of shillings per yard paid for each was the same as the number of yards of the other. How many yards of each did he buy?

23. Find the price of eggs, when 2 less for 30 cents raises the price 2 cents per dozen.

24. A and B started at the same time and traveled toward a place 75 miles distant. A traveled one mile an hour faster than B and reached the place $2\frac{1}{2}$ hours before B. At what rate did each travel?

25. A person drew a quantity of wine from a cask filled with 81 gallons of pure wine, and replaced it with water. He then drew from the mixture as many gallons as he drew before of pure wine, when it was found that the cask contained only 64 gallons of pure wine. How many gallons did he draw each time?

26. The circumference of the fore wheel of a coach is 5 feet less than that of the hind wheel. If the fore wheel makes 150 more revolutions than the hind wheel in going a mile, what is the circumference of each wheel?

27. Two pipes running together can fill a cistern in $2\frac{2}{5}$ hours. The larger pipe can fill the cistern in 2 hours less time than the smaller. How many hours will it take each pipe alone to fill the cistern?

28. It took a number of men as many days to dig a ditch as there were men. If there had been 6 more men, they would have done the work in 8 days. How many men were there?

EQUATIONS IN THE QUADRATIC FORM

298. An equation that contains but two powers of an unknown number or expression, the exponent of one power being twice that of the other, is in the **Quadratic Form.**

Equations in the quadratic form can be reduced to the general form $ax^{2n} + bx^n + c = 0$, in which n represents any number.

Examples

1. Given $x^4 + 6x^2 - 40 = 0$, to find the values of x.

Solution

$$x^4 + 6x^2 - 40 = 0.$$

Factoring, $$(x^2 - 4)(x^2 + 10) = 0.$$

$$\therefore x^2 - 4 = 0 \text{ or } x^2 + 10 = 0,$$

and $$x = \pm 2 \text{ or } \pm\sqrt{-10}.$$

2. Given $x^{\frac{1}{2}} - x^{\frac{1}{4}} = 6$, to find the values of x.

First Solution

$$x^{\frac{1}{2}} - x^{\frac{1}{4}} = 6.$$

Completing the square, $$x^{\frac{1}{2}} - x^{\frac{1}{4}} + (\tfrac{1}{2})^2 = 6\tfrac{1}{4}.$$

Extracting the square root, $$x^{\frac{1}{4}} - \tfrac{1}{2} = \pm\tfrac{5}{2}.$$

$$\therefore x^{\frac{1}{4}} = 3 \text{ or } -2.$$

Raising to the fourth power, $$x = 81 \text{ or } 16.$$

Second Solution

$$x^{\frac{1}{2}} - x^{\frac{1}{4}} = 6.$$

Let $x^{\frac{1}{4}} = p$, then, $$x^{\frac{1}{2}} = p^2, \text{ and } p^2 - p = 6.$$

$$\therefore p^2 - p - 6 = 0.$$

Factoring, $$(p - 3)(p + 2) = 0.$$

$$\therefore p = 3 \text{ or } -2;$$

that is, $$x^{\frac{1}{4}} = 3 \text{ or } -2.$$

Whence, $$x = 81 \text{ or } 16.$$

3. Solve the equation $x - 4x^{\frac{2}{3}} + 3x^{\frac{1}{3}} = 0$.

SOLUTION

Let $x^{\frac{1}{3}} = p$, then, $x^{\frac{2}{3}} = p^2$, and $x = p^3$.

Then, $p^3 - 4p^2 + 3p = 0$.

Factoring, $p(p^2 - 4p + 3) = 0$.

Whence, $p = 0$,

or $p^2 - 4p + 3 = 0$.

Factoring, $(p - 1)(p - 3) = 0$.

Whence, $p = 1$ or $p = 3$.

That is, $x^{\frac{1}{3}} = 0,\ 1,$ or 3.

$\therefore\ x = 0,\ 1,$ or 27.

4. Given $x^2 - 7x + \sqrt{x^2 - 7x + 18} = 24$, to find the value of x.

SOLUTION

$$x^2 - 7x + \sqrt{x^2 - 7x + 18} = 24. \quad (1)$$

Adding 18, $$x^2 - 7x + 18 + \sqrt{x^2 - 7x + 18} = 42. \quad (2)$$

Put p for $(x^2 - 7x + 18)^{\frac{1}{2}}$ and p^2 for $(x^2 - 7x + 18)$. (3)

Then, $$p^2 + p - 42 = 0. \quad (4)$$

Solving, $$p = 6 \text{ or } -7. \quad (5)$$

That is, $$\sqrt{x^2 - 7x + 18} = 6, \quad (6)$$

or $$\sqrt{x^2 - 7x + 18} = -7. \quad (7)$$

Squaring (6), $x^2 - 7x + 18 = 36$.

Solving, $x = 9$ or -2.

Squaring (7), $x^2 - 7x + 18 = 49$.

Solving, $x = \frac{7}{2} \pm \frac{1}{2}\sqrt{173}$.

Hence, $x = 9,\ -2,$ or $\frac{7}{2} \pm \frac{1}{2}\sqrt{173}$.

5. Solve the equation $x^6 - 9x^3 + 8 = 0$.

SOLUTION

$$x^6 - 9x^3 + 8 = 0. \quad (1)$$

Factoring, $$(x^3 - 1)(x^3 - 8) = 0. \quad (2)$$

Therefore, $$x^3 - 1 = 0, \quad (3)$$

or $$x^3 - 8 = 0. \quad (4)$$

If the values of x are found by transposing the known terms in (3) and (4) and extracting the cube root of each member, only *one* value of x will be obtained from each equation. But if the equations are factored, three values of x are obtained.

Factoring, $(x-1)(x^2+x+1)=0,$ (5)

and $(x-2)(x^2+2x+4)=0.$ (6)

Writing each factor equal to zero, and solving:

From Eq. (5), $x=1,\ -\frac{1}{2}+\frac{1}{2}\sqrt{-3},\ -\frac{1}{2}-\frac{1}{2}\sqrt{-3}.$ (7)

From Eq. (6), $x=2,\ -1+\sqrt{-3},\ -1-\sqrt{-3}.$ (8)

Since the values of x in (7) are obtained by factoring $x^3-1=0$, they may be regarded as the three cube roots of the number 1. Also, the values of x in (8) may be regarded as the three cube roots of the number 8 (§ 225).

6. Solve the equation $x^4+4x^3-8x+3=0.$

SOLUTION

Extracting the square root of the first member as far as possible,

$$\begin{array}{rl} & x^4+4x^3-8x+3 \mid x^2+2x-2 \\ & x^4 \\ \hline 2x^2+2x \mid & 4x^3 \\ & 4x^3+4x^2 \\ \hline 2x^2+4x-2 \mid & -4x^2-8x+3 \\ & -4x^2-8x+4 \\ \hline & -1 \end{array}$$

Since the first member lacks 1 of being a perfect square, the square may be completed by adding 1 to each member, giving the following equation:

$$x^4+4x^3-8x+4=1.$$

Extracting the square root, $x^2+2x-2=\pm 1.$

$$\therefore\ x^2+2x-3=0, \text{ and } x^2+2x-1=0.$$

Solving, $x=1,\ -3,\ -1\pm\sqrt{2}.$

Solve the following equations:

7. $x^4-13x^2+36=0.$

8. $x^4-25x^2+144=0.$

9. $x^4-18x^2+32=0.$

10. $3x^4+5x^2-8=0.$

11. $5x^4+6x^2-11=0.$

12. $2x^4-8x^2-90=0.$

13. $x^{\frac{1}{2}}-5x^{\frac{1}{4}}+6=0.$

14. $x^{\frac{1}{2}}+3x^{\frac{1}{4}}-28=0.$

15. $x^{\frac{1}{4}} - 3\,x^{\frac{1}{8}} = -2.$

16. $x^{\frac{2}{3}} - x^{\frac{1}{3}} = 6.$

17. $x + 2\sqrt{x} = 3.$

18. $x^{\frac{2}{3}} - 2\,x^{\frac{1}{3}} = 3.$

19. $x^3 + 8\,x^{\frac{3}{2}} - 9 = 0.$

20. $x^{\frac{3}{2}} + x^{\frac{3}{4}} - 2 = 0.$

21. $\sqrt[4]{x} + 3\sqrt{x} = 30.$

22. $ax^{2n} + bx^n + c = 0.$

23. $x^{\frac{3}{2}} - 4\,x - 5\,x^{\frac{1}{2}} = 0.$

24. $x^{\frac{7}{2}} - x^2 - 12\,x^{\frac{1}{2}} = 0.$

25. $x - 3\,x^{\frac{3}{4}} + 2\,x^{\frac{1}{2}} = 0.$

26. $5\,x = x\sqrt{x} + 6\sqrt{x}.$

27. $3\,x = x\sqrt[3]{x} + 2\sqrt[3]{x^2}.$

28. $x^{-\frac{1}{2}} - 3 - 4\,x^{\frac{1}{2}} = 0.$

29. $x^{-\frac{1}{2}} - 6\,x^{\frac{1}{2}} = 1.$

30. $x^{-3} + x^2 = 2\,x^{-\frac{1}{2}}.$

31. $x + 2\,x^{\frac{5}{3}} = 3\,x^{\frac{4}{3}}.$

32. $2\,x + \sqrt{x} = 15\,x\sqrt{x}.$

33. $\sqrt{x} + 5 + 6\,x^{-\frac{1}{2}} = 0.$

34. $x^4 = 8\,x + 7\,x^2\sqrt{x}.$

35. $(x-3)^2 + 2(x-3) = 3.$

36. $(x^2+1)^2 + 4(x^2+1) = 45.$

37. $(x^2-4)^2 - 3(x^2-4) = 10.$

38. $(x^2-2\,x)^2 - 2(x^2-2\,x) = 3.$

39. $(x^2-x)^2 - (x^2-x) - 132 = 0.$

40. $x - 5 + 2\sqrt{x-5} = 8.$

41. $x^2 - 3\,x + 6 + 2\sqrt{x^2-3\,x+6} = 24.$

42. $x^2 - 5\,x + 2\sqrt{x^2-5\,x-2} = 10.$

43. $x^2 - x - \sqrt{x^2-x+4} - 8 = 0.$

44. $x^2 - 5\,x + 5\sqrt{x^2-5\,x+1} = 49.$

45. $x + 10 = 2\sqrt{x+10} + 5.$

46. $x - 3 = 21 - 4\sqrt{x-3}.$

47. $2\,x - 6\sqrt{2\,x-1} = 8.$

48. $x = 11 - 3\sqrt{x+7}.$

49. $x + 2\sqrt{x+3} = 21.$

50. $2\,x - 3\sqrt{2\,x+5} = -5.$

51. $x^3 + x\sqrt{x} - 72 = 0.$

52. $x^{-\frac{2}{3}} - 5\,x^{-\frac{1}{3}} + 4 = 0.$

53. $\left(\frac{12}{x} - 1\right)^2 + 8\left(\frac{12}{x} - 1\right) = 33.$

54. $\left(x + \frac{1}{x}\right)^2 - 2\left(x + \frac{1}{x}\right) = \frac{5}{4}.$

55. $\left(\frac{1+x^2}{x}\right)^2+2\left(\frac{1+x^2}{x}\right)=8.$

56. $\left(\frac{1-x}{x^2}\right)^2-4\left(\frac{1-x}{x^2}\right)=\frac{17}{16}.$

57. $\left(x-\frac{1}{x}\right)^2+\frac{5}{6}\left(x-\frac{1}{x}\right)=1.$

58. $(x-a)^{\frac{2}{3}}-3\,a^{\frac{1}{3}}(x-a)^{\frac{1}{3}}+2\,a^{\frac{2}{3}}=0.$

59. Find the three cube roots of -1.

60. Find the three cube roots of -8.

61. Find the four fourth roots of 1.

Solve the following equations:

62. $x^6-28\,x^3+27=0.$

63. $x^3-\frac{8}{x^3}=7.$

64. $x^4-16=0.$

65. $x^4+2\,x^3-x=30.$

66. $x^4-4\,x^3+8\,x=-3.$

67. $x^4-2\,x^3+x=132.$

68. $x^4-6\,x^3+27\,x=10.$

69. $x^4+2\,x^3+5\,x^2+4\,x-60=0.$

70. $x^4+6\,x^3+7\,x^2-6\,x-8=0.$

71. $x^4-6\,x^3+15\,x^2-18\,x+8=0.$

72. $x^4-10\,x^3+35\,x^2-50\,x+24=0.$

73. $16\,x^4-8\,x^3-31\,x^2+8\,x+15=0.$

74. $4\,x^4-4\,x^3-7\,x^2+4\,x+3=0.$

75. $\frac{x^2}{x+1}-\frac{x+1}{x^2}=\frac{7}{12}.$

SUGGESTION. — Since the second term is the *reciprocal* of the first, put p for the first term and $-\frac{1}{p}$ for the second.

Then, $p-\frac{1}{p}=\frac{7}{12}.$

76. $\frac{x^2+x}{2}+\frac{2}{x^2+x}=2.$

77. $\frac{x^2+1}{4}+\frac{4}{x^2+1}=\frac{5}{2}.$

78. $\frac{x+2}{x^2+4}+\frac{2(x^2+4)}{x+2}=\frac{51}{5}.$

79. $\frac{x^2+1}{x-1}-\frac{4(x-1)}{x^2+1}=\frac{21}{5}.$

80. $\dfrac{x}{x^2-1}+\dfrac{x^2-1}{x}=-\dfrac{13}{6}$.

81. $x^2+x+1-\dfrac{1}{x^2+x+1}=\dfrac{8}{3}$.

82. $x^2-3x+\dfrac{2}{x^2-3x+2}=1$.

83. $x^2-2x+\dfrac{6}{x^2-2x-6}=11$.

84. $x^2-x+\dfrac{2}{x^2-x-4}=7$.

85. $x^2-2x+\dfrac{4}{x^2-2x+1}=4$.

86. $\dfrac{1}{1+x+x^2}+\dfrac{2}{\sqrt{1+x+x^2}}-3=0$.

SIMULTANEOUS EQUATIONS INVOLVING QUADRATICS

299. An equation whose terms are homogeneous with respect to the unknown numbers is called a **Homogeneous Equation**.

$x^2-xy+y^2=0$, $x^3+y^3=0$, and $ax+y=0$ are homogeneous equations.

$x^2-xy+y^2=21$ is homogeneous in the unknown terms only, since 21 is of the 0th degree in x and y; i.e., $21=21\,x^0y^0$.

300. An equation that is not affected by interchanging the unknown numbers involved in it is called a **Symmetrical Equation**.

$2x^2+xy+2y^2=32$, $x^3+y^3=28$ are symmetrical equations.

301. Many simultaneous equations involving quadratics may be solved by the rules for quadratics:

1. *If one is simple and the other quadratic.*
2. *If the equations are symmetrical.*
3. *If each is quadratic and homogeneous in the unknown terms.*

I. **Simple and quadratic.**

1. Solve the equations $\begin{cases} x+y=7, \\ 3x^2+y^2=43. \end{cases}$

SOLUTION

$$x+y=7. \tag{1}$$

$$3x^2+y^2=43. \tag{2}$$

From (1), $$y=7-x. \tag{3}$$

Substituting in (2), $$3x^2+(7-x)^2=43. \tag{4}$$

Solving, $x = 3$ or $\frac{1}{2}$. (5)

Substituting 3 for x in (3), $y = 4$. (6)

Substituting $\frac{1}{2}$ for x in (3), $y = 1\frac{3}{2}$. (7)

That is, x and y each have two values $\begin{cases} \text{when } x = 3,\ y = 4, \\ \text{when } x = \frac{1}{2},\ y = 1\frac{3}{2}. \end{cases}$

Equations of this class may be solved by finding the value of one unknown number in terms of the other in one equation, and then substituting it in the other.

Solve the following equations:

2. $\begin{cases} x^2 + y^2 = 20, \\ x = 2y. \end{cases}$

3. $\begin{cases} 10x + y = 3xy, \\ y - x = 2. \end{cases}$

4. $\begin{cases} x^2 + xy = 12, \\ x - y = 2. \end{cases}$

5. $\begin{cases} x = 6 - y, \\ x^3 + y^3 = 72. \end{cases}$

6. $\begin{cases} xy(x - 2y) = 10, \\ xy = 10. \end{cases}$

7. $\begin{cases} 3x(y + 1) = 12, \\ 3x = 2y. \end{cases}$

II. **Symmetrical.**

8. Solve the equations $\begin{cases} x + y = 7, \\ xy = 10. \end{cases}$

SOLUTION

$x + y = 7.$ (1)

$xy = 10.$ (2)

Squaring (1), $x^2 + 2xy + y^2 = 49.$ (3)

Multiplying (2) by 4, $4xy = 40.$ (4)

Subtracting (4) from (3), $x^2 - 2xy + y^2 = 9.$ (5)

Extracting the square root, $x - y = \pm 3.$ (6)

From (1) + (6), $x = 5$ or $2.$

From (1) − (6), $y = 2$ or $5.$

Such equations may be solved by the method illustrated in example 1, but the method given above of finding the value of

$x - y$, so that it may be combined with the value of $x + y$ to discover the values of x and y, is preferable.

9. Solve the equations $\begin{cases} x^2 + y^2 = 25, \\ x + y = 7. \end{cases}$

SOLUTION

$$x^2 + y^2 = 25. \quad (1)$$

$$x + y = 7. \quad (2)$$

Squaring (2), $x^2 + 2xy + y^2 = 49.$ (3)

Subtracting (1) from (3), $2xy = 24.$ (4)

Subtracting (4) from (1), $x^2 - 2xy + y^2 = 1.$ (5)

Extracting the square root, $x - y = \pm 1.$ (6)

From (2) + (6), $x = 4$ or $3.$

From (2) − (6), $y = 3$ or $4.$

10. Solve the equations $\begin{cases} x^4 + y^4 = 97, \\ x + y = 1. \end{cases}$

SOLUTION

$$x^4 + y^4 = 97. \quad (1)$$

$$x + y = 1. \quad (2)$$

4th power of (2), $x^4 + 4x^3y + 6x^2y^2 + 4xy^3 + y^4 = 1.$ (3)

Subtracting (1), $4x^3y + 6x^2y^2 + 4xy^3 = -96.$ (4)

Dividing by 2, $2x^3y + 3x^2y^2 + 2xy^3 = -48.$ (5)

$2xy \times$ square of (2), $2x^3y + 4x^2y^2 + 2xy^3 = 2xy.$ (6)

Subtracting (5) from (6), $x^2y^2 - 2xy = 48.$ (7)

Solving for xy, $xy = -6$ or $8.$ (8)

Equations (2) and (8) give two pairs of simultaneous equations,

$$\begin{cases} x + y = 1 \\ xy = -6 \end{cases} \text{ and } \begin{cases} x + y = 1 \\ xy = 8 \end{cases}$$

Solving these by previous methods,

$$x = 3, \text{ or } -2, \text{ or } \tfrac{1}{2} + \tfrac{1}{2}\sqrt{-31}, \text{ or } \tfrac{1}{2} - \tfrac{1}{2}\sqrt{-31}.$$

$$y = -2, \text{ or } 3, \text{ or } \tfrac{1}{2} - \tfrac{1}{2}\sqrt{-31}, \text{ or } \tfrac{1}{2} + \tfrac{1}{2}\sqrt{-31}.$$

Solve the following equations:

11. $\begin{cases} x^2+y^2=50, \\ xy=7. \end{cases}$

12. $\begin{cases} x+y=8, \\ x^2+y^2=34. \end{cases}$

13. $\begin{cases} x+y=9, \\ x^3+y^3=243. \end{cases}$

14. $\begin{cases} x^2+y^2=13, \\ x+y+xy=11. \end{cases}$

15. $\begin{cases} x^4+y^4=17, \\ x+y=3. \end{cases}$

16. $\begin{cases} x^4+x^2y^2+y^4=21, \\ x^2+xy+y^2=7. \end{cases}$

III. **Quadratic and homogeneous in the unknown terms.**

17. Solve the equations $\begin{cases} x^2-xy+y^2=21, \\ y^2-2xy=-15. \end{cases}$

SOLUTION

$$x^2-xy+y^2=21. \tag{1}$$

$$y^2-2xy=-15. \tag{2}$$

Assume $x=vy.$ (3)

Substituting in (1), $v^2y^2-vy^2+y^2=21.$ (4)

Substituting in (2), $y^2-2vy^2=-15.$ (5)

Solving (4) for y^2, $y^2=\dfrac{21}{v^2-v+1}.$ (6)

Solving (5) for y^2, $y^2=\dfrac{15}{2v-1}.$ (7)

Comparing the values of y^2, $\dfrac{15}{2v-1}=\dfrac{21}{v^2-v+1}.$ (8)

Clearing, etc., $5v^2-19v+12=0.$ (9)

Factoring, $(v-3)(5v-4)=0.$ (10)

$\therefore v=3$ or $\frac{4}{5}.$ (11)

Substituting 3 for v in (7) or in (6), $y=\pm\sqrt{3}$

and since $x=vy$, $x=\pm 3\sqrt{3}$

Substituting $\frac{4}{5}$ for v in (7) or in (6), $y=\pm 5$

and since $x=vy$, $x=\pm 4$

Hence, $\begin{cases} x=+3\sqrt{3}, \text{ or } -3\sqrt{3}, \text{ or } +4, \text{ or } -4. \\ y=+\sqrt{3}, \text{ or } -\sqrt{3}, \text{ or } +5, \text{ or } -5. \end{cases}$

Solve the following equations:

18. $\begin{cases} xy + 3y^2 = 20, \\ x^2 - 3xy = -8. \end{cases}$

19. $\begin{cases} x^2 + xy = 12, \\ xy + 2y^2 = 5. \end{cases}$

20. $\begin{cases} x^2 + 2y^2 = 44, \\ xy - y^2 = 8. \end{cases}$

21. $\begin{cases} x^2 - xy - y^2 = 20, \\ x^2 - 3xy + 2y^2 = 8. \end{cases}$

22. $\begin{cases} x^2 - xy + y^2 = 21, \\ x^2 + 2y^2 = 27. \end{cases}$

23. $\begin{cases} 2x^2 - 3xy + 2y^2 = 100, \\ x^2 - y^2 = 75. \end{cases}$

302. Many simultaneous equations that belong to one or more of the preceding classes, and many that belong to none of them, may be readily solved by *special devices.*

24. Solve the equations $\begin{cases} x^2 + xy = 12, \\ xy + y^2 = 4. \end{cases}$

SOLUTION

$$x^2 + xy = 12. \tag{1}$$

$$xy + y^2 = 4. \tag{2}$$

Adding, $$x^2 + 2xy + y^2 = 16. \tag{3}$$

$$\therefore x + y = +4 \text{ or } -4. \tag{4}$$

Subtracting (2) from (1), $$x^2 - y^2 = 8. \tag{5}$$

Dividing (5) by (4), $$x - y = +2 \text{ or } -2. \tag{6}$$

Combining (4) and (6), $$x = 3 \text{ or } -3;\ y = 1 \text{ or } -1.$$

25. Solve the equations $\begin{cases} x^4 + x^2y^2 + y^4 = 48, \\ x^2 - xy + y^2 = 12. \end{cases}$

SOLUTION

$$x^4 + x^2y^2 + y^4 = 48. \tag{1}$$

$$x^2 - xy + y^2 = 12. \tag{2}$$

Dividing (1) by (2), $$x^2 + xy + y^2 = 4. \tag{3}$$

From (3) − (2), $$xy = -4. \tag{4}$$

By adding (4) to (3), and subtracting (4) from (2), the values of $(x + y)^2$ and $(x - y)^2$ may be found and the solution readily completed.

26. Solve the equations $\begin{cases} x^3 - y^3 = 26, \\ x - y = 2. \end{cases}$

SOLUTION

$$x^3 - y^3 = 26. \tag{1}$$

$$x - y = 2. \tag{2}$$

Dividing (1) by (2), $x^2 + xy + y^2 = 13.$ (3)

Squaring (2), $x^2 - 2xy + y^2 = 4.$ (4)

Subtracting, dividing by 3, $xy = 3.$ (5)

By adding (5) to (3), the value of $(x + y)^2$ may be obtained and the solution completed as in previous examples.

27. Solve the equations $\begin{cases} x^4 + y^4 = 82, \\ x - y = 2. \end{cases}$

SOLUTION

$$x^4 + y^4 = 82. \tag{1}$$

$$x - y = 2. \tag{2}$$

Assume $x = u + v,$ (3)

and $y = u - v.$ (4)

Substituting these values in (1),

$$u^4 + 4u^3v + 6u^2v^2 + 4uv^3 + v^4$$

$$+ u^4 - 4u^3v + 6u^2v^2 - 4uv^3 + v^4 = 82, \tag{5}$$

and in (2), $2v = 2.$ (6)

Dividing (5) by 2, $u^4 + 6u^2v^2 + v^4 = 41.$ (7)

Dividing (6) by 2, $v = 1.$ (8)

Substituting 1 for v in (7) and solving, $u = \pm 2$ or $\pm\sqrt{-10}.$ (9)

Hence, from (3) and (4), $x = 3$ or -1 or $1 \pm \sqrt{-10},$

and $y = 1$ or -3 or $-1 \pm \sqrt{-10}.$

28. Solve the equations $\begin{cases} x^2 + y^2 + x + y = 14, \\ xy = 3. \end{cases}$

SOLUTION

$$x^2 + y^2 + x + y = 14.$$

$$xy = 3.$$

Adding twice the second equation to the first,

$$x^2 + 2xy + y^2 + x + y = 20.$$

Completing the square, $(x+y)^2 + x + y + (\frac{1}{2})^2 = 20\frac{1}{4}$.

Extracting the square root, $x + y + \frac{1}{2} = \pm\frac{9}{2}$.

$\therefore\ x + y = 4 \text{ or } -5.$

The solution may be completed by solving the equations,

$$\begin{cases} x+y=4 \\ xy=3 \end{cases} \text{ and } \begin{cases} x+y=-5 \\ xy=3 \end{cases}$$

The student will doubtless discover many other methods for solving simultaneous equations. All the preceding solutions are but illustrations of devices that are important only because they are often applicable.

Solve the following simultaneous equations:

29. $\begin{cases} x^2+y^2=53, \\ x-y=5. \end{cases}$

30. $\begin{cases} x^3+y^3=28, \\ x+y=4. \end{cases}$

31. $\begin{cases} 1+x=y, \\ x^2+y^2=61. \end{cases}$

32. $\begin{cases} 1+x=y, \\ 1+x^3=\dfrac{y^3}{4}. \end{cases}$

33. $\begin{cases} x^2+y^2=40, \\ xy=12. \end{cases}$

34. $\begin{cases} x(x+y)=x, \\ y(x-y)=-1. \end{cases}$

35. $\begin{cases} x^2+3xy-y^2=43, \\ x+2y=10. \end{cases}$

36. $\begin{cases} x^2+xy+y^2=19, \\ x^3-y^3=19. \end{cases}$

37. $\begin{cases} x^2+3xy=y^2+23, \\ x+3y=9. \end{cases}$

38. $\begin{cases} 2x^2+xy-5y^2=20, \\ 2x-3y=1. \end{cases}$

39. $\begin{cases} \dfrac{x^2}{y^2}+\dfrac{4x}{y}=21, \\ x-y=2. \end{cases}$

40. $\begin{cases} x^2-xy=48, \\ xy-y^2=12. \end{cases}$

41. $\begin{cases} x^2+xy=-6, \\ xy+y^2=15. \end{cases}$

42. $\begin{cases} 4xy=96-x^2y^2, \\ x+y=6. \end{cases}$

43. $\begin{cases} x^2-xy=8, \\ xy+y^2=12. \end{cases}$

44. $\begin{cases} x^2-xy=6, \\ x^2+y^2=61. \end{cases}$

45. $\begin{cases} x^2+xy=77, \\ xy-y^2=12. \end{cases}$

46. $\begin{cases} 2x-y=2, \\ 2x^2+y^2=\frac{3}{2}. \end{cases}$

47. $\begin{cases} 2x^2 + 3xy + y^2 = 20, \\ 5x^2 + 4y^2 = 41. \end{cases}$

48. $\begin{cases} 2xy - y^2 = 12, \\ 3xy + 5x^2 = 104. \end{cases}$

49. $\begin{cases} x^2 + xy + y^2 = 151, \\ x^2 + y^2 = 106. \end{cases}$

50. $\begin{cases} x^2 + xy + y^2 = 84, \\ x - \sqrt{xy} + y = 6. \end{cases}$

51. $\begin{cases} 4x^2 - 2xy + y^2 = 13, \\ 8x^3 + y^3 = 65. \end{cases}$

52. $\begin{cases} 6x^2 + 6y^2 = 13xy, \\ x^2 - y^2 = 20. \end{cases}$

53. $\begin{cases} x^2 + y^2 - 3(x + y) = 8, \\ x + y + xy = 11. \end{cases}$

54. $\begin{cases} 3xy + 2x + y = 25, \\ \dfrac{9x}{y} = \dfrac{4y}{x}. \end{cases}$

55. $\begin{cases} x^2 + xy = 40, \\ 27 + 2y^2 = 3xy. \end{cases}$

56. $\begin{cases} xy^2 + xy = 24, \\ xy^3 + x = 56. \end{cases}$

57. $\begin{cases} x^4 + y^4 = 82, \\ x + y = 4. \end{cases}$

58. $\begin{cases} x^4 - y^4 = 369, \\ x^2 - y^2 = 9. \end{cases}$

59. $\begin{cases} x^2 + y^2 - 78 = x + y, \\ xy + x + y = 39. \end{cases}$

60. $\begin{cases} x^2 + 2xy + 3y^2 = 43, \\ 2x^2 + 3xy + 4y^2 = 62. \end{cases}$

61. $\begin{cases} x^2 - xy + 2y^2 = 46, \\ x^2 + xy + 3y^2 = 111. \end{cases}$

62. $\begin{cases} x^2 - 7xy + 12y^2 = 0, \\ xy + 3y = 2x + 21. \end{cases}$

63. $\begin{cases} x^3 - y^3 = 37, \\ xy(y - x) = -12. \end{cases}$

64. $\begin{cases} x + y = 25, \\ \sqrt{x} + \sqrt{y} = 7. \end{cases}$

65. $\begin{cases} x^3 + y^3 = 225y, \\ x^2 - y^2 = 75. \end{cases}$

66. $\begin{cases} x^2 + xy + 2y^2 = 11, \\ 2x^2 + 5y^2 = 22. \end{cases}$

67. $\begin{cases} x^2 + y^2 = 3xy + 5, \\ x^4 + y^4 = 2. \end{cases}$

68. $\begin{cases} x^2 + y^2 = \dfrac{13}{x - y}, \\ x^2y - xy^2 = 6. \end{cases}$

69. $\begin{cases} (x + y)(x^2 + y^2) = 65, \\ (x - y)(x^2 - y^2) = 5. \end{cases}$

70. $\begin{cases} x^2 + y = x - y^2 + 42, \\ xy = 20. \end{cases}$

71. $\begin{cases} x + y + 2\sqrt{x + y} = 24, \\ x - y + 3\sqrt{x - y} = 10. \end{cases}$

72. $\begin{cases} x^2 + y^2 + 6\sqrt{x^2 + y^2} = 55, \\ x^2 - y^2 = 7. \end{cases}$

73. $\begin{cases} \dfrac{x+y}{y} - \dfrac{2x}{x+y} + \dfrac{x^3 - x^2y}{y^3 - x^2y} = \dfrac{3}{8}, \\ x^2 = y^2 + 16. \end{cases}$

74. $\begin{cases} x^2 - xy = a^2 + b^2, \\ xy - y^2 = 2ab. \end{cases}$

75. $\begin{cases} x - 2y = 2(a+b), \\ xy + 2y^2 = 2b(b-a). \end{cases}$

76. $\begin{cases} x^3 + y^3 = 2a(a^2 + 3b^2), \\ x^2y + xy^2 = 2a(a^2 - b^2). \end{cases}$

77. $\begin{cases} \dfrac{a-x}{x} + \dfrac{b+y}{y} = \dfrac{ay + bx}{a^2 - b^2}, \\ x^2 + y^2 = 2(a^2 + b^2). \end{cases}$

Problems

303. 1. The sum of two numbers is 12, and their product is 32. What are the numbers?

2. The sum of two numbers is 17, and the sum of their squares is 157. What are the numbers?

3. The difference of two numbers is 1, and the difference of their cubes 91. What are the numbers?

4. The sum of two numbers is 82, and the sum of their square roots is 10. What are the numbers?

5. It takes 52 rods of fence to inclose a rectangular garden containing 1 acre. How long and how wide is the garden?

6. The sum of the squares of the terms of a fraction is 89, and the fraction is $\frac{39}{40}$ larger than its reciprocal. What is the fraction?

7. Find two numbers such that their product is 8 greater than twice their sum and 48 less than the sum of their squares.

8. If 63 is subtracted from a certain number expressed by two digits, its digits will be transposed; and if the number is multiplied by the sum of its digits, the product will be 729. What is the number?

9. A man expended \$6 for canvas. Had it cost 4 cents less per yard, he would have received 5 yards more. How many yards did he buy, and at what price per yard?

10. If the difference of two numbers multiplied by the greater is 160, and multiplied by the less is 96, what are the numbers?

11. A rectangular flower garden containing 54 square rods was enlarged to twice its former size by making an addition of $1\frac{1}{2}$ rods on all sides. What were the original dimensions of the garden?

12. If it requires 200 rods of fence to inclose a rectangular field of 15 acres, what are its dimensions?

13. A rectangular field contains 20 acres. If its length were 20 rods less and its width 8 rods less, its area would be 8 acres less. What are its dimensions?

14. A man found that he could buy 16 more sheep than cows for \$100, and that the cost of 3 cows was \$15 greater than the cost of 4 times as many sheep. What was the price of each?

15. Eight persons contributed \$30 to pay for a set of books. One half of the amount was contributed by women, and the other half by men, each man giving \$2 more than each woman. What did each woman and what did each man contribute?

16. A man loaned \$1000 in two unequal sums at such rates that both sums yielded the same annual interest. The larger sum at the higher rate of interest would have yielded \$36 annually, the smaller sum at the lower rate, \$16 annually. What sums did he invest, and at what rates of interest?

17. If 2 is added to the numerator and subtracted from the denominator of a certain fraction, the result will be the reciprocal of the fraction; if 3 is subtracted from the numerator and added to the denominator, the result will be $\frac{3}{7}$ of the original fraction. What is the fraction?

18. The product of two numbers is 59 greater than their sum, and the sum of their squares is 170. What are the numbers?

19. A purse contained \$ 50.50 in gold and silver coins. If there were fifteen coins, and if each gold coin was worth as many dollars as there were silver coins and each silver coin was worth as many cents as there were gold coins, how many coins of each kind were there?

20. Two men working together can complete a piece of work in $6\frac{2}{3}$ days. If it would take one man 3 days longer than the other to do the work alone, in how many days can each man do the work alone?

21. The fore wheel of a carriage makes 12 revolutions more than the hind wheel in going 240 yards. If the circumference of each wheel were one yard more than it is, the fore wheel would make 8 revolutions more than the hind wheel in going 240 yards. What is the circumference of each wheel?

22. A sum of money on interest for 1 year at a certain per cent amounted to \$ 11130. If the rate had been 1% less and the principal \$ 100 more, the amount would have been the same. Find the principal and rate.

23. A number multiplied by another composed of the same two digits, but reversed, gives a product of 4032. If the first divided by the second is equal to $1\frac{3}{4}$, what are the numbers?

24. The town A is on a lake and 12 miles from B, which is 4 miles from the opposite shore. A man rows across the lake and walks to B in 3 hours. In returning he walks at the same rate as before, but rows 2 miles an hour less than before. If it takes him 5 hours to return, find his rates of walking and rowing.

25. A, B, and C started together to ride a certain distance. A and C rode the whole distance at uniform rates, A two miles an hour faster than C. B rode with C for 20 miles, and then, by increasing his speed two miles an hour, reached his destination 40 minutes earlier than C and 20 minutes later than A. Find the distance, and the rate at which each traveled.

26. Find two numbers such that their product is equal to the difference of their squares, and the difference of their cubes is equal to the sum of their squares.

PROPERTIES OF QUADRATICS

304. Every quadratic equation may be reduced to the form

$$ax^2 + bx + c = 0, \tag{1}$$

in which a is positive and b and c are positive or negative.

Denote the roots by r_1 and r_2. Then, § 294, Ex. 13,

$$r_1 = \frac{-b + \sqrt{b^2 - 4ac}}{2a} \text{ and } r_2 = \frac{-b - \sqrt{b^2 - 4ac}}{2a}. \tag{2}$$

In the following discussion of the nature of the roots of a quadratic equation, the student should keep in mind the distinctions between rational and irrational, real and imaginary. For example, 2 and $\sqrt{4}$ are *rational*, and *real* also; $\sqrt{2}$ and $\sqrt{5}$ are *irrational*, but *real*; $\sqrt{-2}$ and $\sqrt{-5}$ are *irrational*, and also *imaginary*.

1. *Suppose that* $b^2 - 4ac$ *is positive.*

Then, $\sqrt{b^2 - 4ac}$ is a positive real number and $-\sqrt{b^2 - 4ac}$ is a negative real number. Hence, the roots are real and unequal.

If $b^2 - 4ac$ is a perfect square, the roots are rational; otherwise they are irrational.

2. *Suppose that* $b^2 - 4ac = 0$.

Then, $\sqrt{b^2 - 4ac} = 0$ and the roots are real and equal.

3. *Suppose that* $b^2 - 4ac$ *is negative.*

Then, $\sqrt{b^2 - 4ac}$ and $-\sqrt{b^2 - 4ac}$ are imaginary, and consequently both roots are imaginary.

PRINCIPLES. — 1. *In any quadratic equation* $ax^2 + bx + c = 0$, *if* $b^2 - 4ac$ *is positive, the roots are real and unequal; if* $b^2 - 4ac = 0$, *the roots are real and equal; if* $b^2 - 4ac$ *is negative, both roots are imaginary.*

2. *If* $b^2 - 4ac$ *is a perfect square or is equal to zero, the roots are rational; otherwise they are irrational.*

When the roots are real, their signs are found by comparing the values of b and c.

If c is positive, $-b$ is numerically greater than $\pm\sqrt{b^2 - 4ac}$, whence both roots have the sign of $-b$; if c is negative, $-b$ is numerically less than $\pm\sqrt{b^2 - 4ac}$, whence r_1 is positive and r_2 is

negative. The root having the sign opposite to that of b is the greater numerically. Hence,

PRINCIPLE 3. — *If c is positive, both roots have the sign opposite to that of b; if c is negative, the roots have opposite signs, and the numerically greater root has the sign opposite to that of b.*

The following are special cases:

1. If $c = 0$, (1) reduces to the form $ax^2 + bx = 0$, which has two roots, $-\frac{b}{a}$ and 0.

2. If $b = 0$, (1) becomes the pure quadratic equation $ax^2 + c = 0$, whose roots are numerically equal with opposite signs.

3. If $c = 0$ and $b = 0$, (1) becomes $ax^2 = 0$, which has two zero roots.

4. If $a = 0$ or if $a = 0$ and $b = 0$, (1) ceases to be a quadratic equation. But if these coefficients differ from zero, however little, (1) is still a quadratic equation and has two roots. To discover the nature of the roots in these cases, rationalize the numerators in (2).

Then, $$r_1 = \frac{2c}{-b - \sqrt{b^2 - 4ac}} \text{ and } r_2 = \frac{2c}{-b + \sqrt{b^2 - 4ac}}. \qquad (3)$$

Suppose that a is very small as compared with b and c.

Then, the denominator of r_1 is very nearly equal to $-b - \sqrt{b^2}$, or to $-2b$, and the denominator of r_2 is very small.

Hence, the smaller a is the less will the first root differ from $-\frac{c}{b}$, the root of the simple equation $bx + c = 0$, and the greater will be the numerical value of the second root.

Suppose that a and b are very small as compared with c.

Then, both denominators in (3) are very small as compared with the numerators.

Hence, the smaller a and b are the greater will both roots be in numerical value.

EXAMPLES

1. What is the nature of the roots of $x^2 - 7x - 8 = 0$?

SOLUTION. — Since $b^2 - 4ac = 49 + 32 = 81 = 9^2$, the roots are real and unequal (Prin. 1), and rational (Prin. 2). Since c is negative, the roots have opposite signs and, b being negative, the positive root is the greater numerically (Prin. 3).

2. What is the nature of the roots of $3x^2 + 5x + 3 = 0$?

SOLUTION. — Since $b^2 - 4ac = 25 - 36 = -11$, both roots are imaginary (Prin. 1).

Find the nature of the roots of the following equations:

3. $x^2 - 5x - 75 = 0$.
4. $x^2 + 5x + 6 = 0$.
5. $x^2 + 7x - 30 = 0$.
6. $x^2 - 3x + 5 = 0$.
7. $x^2 + 3x - 5 = 0$.
8. $x^2 + x + 2 = 0$.
9. $x^2 + x - 2 = 0$.
10. $4x^2 - 4x + 1 = 0$.
11. $4x^2 + 6x - 4 = 0$.
12. $2x^2 - 9x + 4 = 0$.
13. $4x^2 + 16x + 7 = 0$.
14. $9x^2 + 12x + 4 = 0$.

305. Formation of quadratic equations.

Any quadratic equation, as $ax^2 + bx + c = 0$, may be reduced, by dividing both members by the coefficient of x^2, to the form $x^2 + px + q = 0$, whose roots are

$$r_1 = \frac{-p + \sqrt{p^2 - 4q}}{2} \text{ and } r_2 = \frac{-p - \sqrt{p^2 - 4q}}{2}.$$

Adding the roots, $r_1 + r_2 = \frac{-2p}{2} = -p$.

Multiplying the roots, $r_1 r_2 = \frac{p^2 - (p^2 - 4q)}{4} = q$. Hence,

306. PRINCIPLE. — *The sum of the roots of a quadratic equation having the form $x^2 + px + q = 0$ is equal to the coefficient of x with its sign changed, and their product is equal to the absolute term.*

Substituting $-(r_1 + r_2)$ for p, and $r_1 r_2$ for q in $x^2 + px + q = 0$,

$$x^2 - (r_1 + r_2)x + r_1 r_2 = 0.$$

Expanding, $x^2 - r_1 x - r_2 x + r_1 r_2 = 0$.

Factoring, $(x - r_1)(x - r_2) = 0$.

Hence, to form a quadratic equation when the roots are given:

RULE. — *Subtract each root from x and place the product of the remainders equal to zero.*

EXAMPLES

1. Form an equation whose roots are -5 and 2.

SOLUTION. $(x + 5)(x - 2) = 0$, or $x^2 + 3x - 10 = 0$.

Or, since the sum of the roots with their signs changed is $+5 - 2$, or 3, and the product of the roots is -10 (Prin.), the equation is $x^2 + 3x - 10 = 0$.

Form equations whose roots are

2. $6, 4.$
3. $5, -3.$
4. $3, -\frac{1}{3}.$
5. $\frac{2}{3}, \frac{5}{3}.$
6. $-2, -\frac{1}{2}.$
7. $-\frac{1}{2}, -\frac{3}{2}.$
8. $a, -3a.$
9. $a+2, a-2.$
10. $b+1, b-1.$
11. $a+b, a-b.$
12. $\sqrt{a}-\sqrt{b}, \sqrt{b}.$
13. $\frac{1}{2}(a \pm \sqrt{b}).$
14. $3+\sqrt{2}, 3-\sqrt{2}.$
15. $-2-\sqrt{5}, -2+\sqrt{5}.$
16. $2 \pm 3\sqrt{\frac{1}{3}}.$
17. $-\frac{1}{2}(3 \pm \sqrt{6}).$
18. $\frac{1}{2}(-1 \pm \sqrt{2}).$
19. $a(2 \pm 2\sqrt{5}).$

GENERAL REVIEW

307. 1. Add $x\sqrt{y}+y\sqrt{x}+\sqrt{xy}$, $x^{\frac{1}{2}}y^{\frac{1}{2}}-\sqrt{x^2y}-\sqrt{xy^2}$, $\sqrt{x^2y}-\sqrt{xy^2}-\sqrt{xy}$, and $y\sqrt{x}-x\sqrt{4y}-\sqrt{9xy}$.

2. From the sum of $2a+3b-3y$ and $2y-a-3b$ subtract $(a-b-y)-(a+b+y)$.

3. What number must be added to a to give $b-a$?

4. If $a=2$ and $b=3$, find the value of

$$\frac{a+2b}{a}+\frac{b}{a-b}-\frac{a^3-a^2b}{2a-b}.$$

5. What number must be subtracted from $a-b$ to give $b-a+c$?

6. Simplify $a-\{b-a-[a-b-(2a+b)+(2a-b)-a]-b\}$.

7. A grocer sold m pounds of sugar at a cents a pound, and a pounds of tea at b cents a pound. If the sugar cost him b cents a pound and the tea m cents a pound, what was his gain by the transaction?

8. Multiply $a^3+2a^2b+2ab^2+b^3$ by $a^3-2a^2b+2ab^2-b^3$.

9. Multiply $x^{m-1}-2y^{n-2}$ by $2x+y^2$.

10. Multiply $x\sqrt{x}+x\sqrt{y}+y\sqrt{x}+y\sqrt{y}$ by $\sqrt{x}-\sqrt{y}$.

11. Multiply $2x^{\frac{a}{2b}}-5y^{\frac{a+b}{2}}$ by $2x^{\frac{a}{2b}}+5y^{\frac{a+b}{2}}$.

12. Expand $(x^n-y^n)(x^n+y^n)(x^{2n}+y^{2n})$.

13. Divide x^4-y^4 by $x-y$.

14. Divide $x^5 - 3x^2 - 20$ by $x - 2$, using detached coefficients.

15. Prove that $x^{50} - b^{50}$ is divisible by $x + b$.

16. Divide $(a+b) + x$ by $(a+b)^{\frac{1}{3}} + x^{\frac{1}{3}}$.

17. Factor $9x^2 - 12x + 4$.

18. Factor $9x^2 + 9x + 2$.

19. Factor $x^3 - 3x + 2$.

20. Prove that $x - a$ is a factor of $x^n + 3ax^{n-1} - 4a^n$.

21. Separate $a^{12} - 1$ into six rational factors.

22. Factor $4(ad + bc)^2 - (a^2 - b^2 - c^2 + d^2)^2$.

23. Find the H. C. D. of $x^2 - y^2$, $x^2 + 2xy + y^2$, and $y^2 + xy$.

24. Find the H. C. D. of $3x^2 - x - 2$ and $6x^2 + x - 2$.

25. Find the H. C. D. of $4x^4 - 11x^2 + 11x - 12$,
$2x^4 + x^3 - 4x^2 + 7x - 15$, and $2x^4 + x^3 - x - 12$.

26. Find the L. C. M. of $4a^2bx$, $6ab^2y^2$, and $2axy$.

27. Find the L. C. M. of $x^2 - y^2$, $x + y$, and $xy - y^2$.

28. Reduce $\dfrac{x^2 - 5x + 6}{3x^2 - 4x - 4}$ to its lowest terms.

29. Reduce $\dfrac{x^3 - 5x^2 + 4}{x^3 - 2x^2 + 1}$ to its lowest terms.

30. Reduce $\dfrac{a^2 - b^2 - c^2 - 2bc}{a^2 - b^2 + c^2 + 2ac}$ to its lowest terms.

31. Simplify $\dfrac{x}{x+1} - \dfrac{x}{1-x} + \dfrac{x^2}{x^2-1}$.

32. Simplify $\dfrac{x+y}{2x-2y} + \dfrac{x-y}{2x+2y} + \dfrac{4x^2y^2}{y^4-x^4}$.

33. Simplify $\dfrac{1}{(a-b)(b-c)} - \dfrac{1}{(c-b)(c-a)} + \dfrac{1}{(c-a)(a-b)}$.

34. Simplify $\left(a + \dfrac{1}{a}\right)\left(a^2 + \dfrac{1}{a^2}\right)\left(a - \dfrac{1}{a}\right)$.

35. Simplify $\dfrac{1}{x - \dfrac{1}{x + \dfrac{1}{x}}} - \dfrac{1}{x + \dfrac{1}{x - \dfrac{1}{x}}}$.

36. Simplify $\left(\dfrac{x}{1+\dfrac{1}{x}}+1-\dfrac{1}{x+1}\right) \div \left(\dfrac{x}{1-\dfrac{1}{x}}-x-\dfrac{1}{x-1}\right)$.

37. Prove that $\dfrac{a}{b} \times \dfrac{p}{q} = \dfrac{ap}{bq}$.

38. Prove that $\dfrac{a}{b} \div \dfrac{m}{n} = \dfrac{an}{bm}$.

39. Divide $\dfrac{\sqrt{x}}{\sqrt{y}} - \dfrac{\sqrt{y}}{\sqrt{x}}$ by $\dfrac{1}{\sqrt{y}} - \dfrac{1}{\sqrt{x}}$.

40. Raise $a - b$ to the seventh power.

41. Expand $(2a + 3b)^4$.

42. Expand $(\sqrt{x} + \sqrt[3]{y})^6$.

43. Square $\sqrt{a+b-c}$.

44. Extract the square root of $a^2 + 2a\sqrt{ab} + 3ab + 2b\sqrt{ab} + b^2$.

45. Extract the cube root of $8a^3 - 36a^2b + 54ab^2 - 27b^3$.

46. Extract the square root of $a + b$ to four terms.

47. Find the sixth root of 4826809.

48. Reduce $\sqrt{\frac{2}{3}}$ to its simplest form.

49. Reduce $\sqrt[4]{25a^4}$ to its simplest form.

50. Find the approximate value of $\dfrac{1}{\sqrt{2}}$.

51. Multiply $2 + \sqrt{8}$ by $1 - \sqrt{2}$.

52. Simplify $\dfrac{\sqrt{3} + 3\sqrt{2}}{\sqrt{6} + 2}$.

53. Prove that $x^0 = 1$.

54. Prove that $ax^{-5} = \dfrac{a}{x^5}$.

55. Prove that $x^{\frac{2}{3}} = \sqrt[3]{x^2}$; also that $x^{\frac{2}{3}} = (\sqrt[3]{x})^2$.

56. Find the value of $125^{\frac{2}{3}}$; of $\left(\dfrac{x^5}{32}\right)^{-\frac{3}{5}}$.

Solve the following equations:

57. $\dfrac{1}{a-b}+\dfrac{a-b}{x}=\dfrac{1}{a+b}+\dfrac{a+b}{x}$.

58. $\dfrac{x-\frac{1}{a}}{c}+\dfrac{x-\frac{1}{b}}{a}+\dfrac{x-\frac{1}{c}}{b}=0$.

59. $mx^2-nx=mn$.

60. $x^4+\dfrac{1}{2}=\dfrac{3x^2}{2}$.

61. $x^6+8=9x^3$.

62. $(1+x)^5+(1-x)^5=242$.

63. $\sqrt{x-9}=\sqrt{x}-1$.

64. $x^2+\sqrt{x^2+16}=14$.

65. $\left(\dfrac{4}{x}+x\right)^2-\left(\dfrac{4}{x}+x\right)=20$.

66. $x+x^2+(1+x+x^2)^2=55$.

67. $\dfrac{1+x}{1+x+\sqrt{1+x^2}}=a-\dfrac{1+x}{1-x+\sqrt{1+x^2}}$.

68. $\begin{cases} x+y=8, \\ y+z=4, \\ z+x=6. \end{cases}$

69. $\begin{cases} \dfrac{1}{x}+\dfrac{1}{y}=10, \\ \dfrac{3}{x}+\dfrac{2}{y}=10. \end{cases}$

70. $\begin{cases} 2x+3y+z=9, \\ x+2y+3z=13, \\ 3x+y+2z=11. \end{cases}$

71. $\begin{cases} ax+y+z=2(a+1), \\ x+ay+z=3a+1, \\ x+y+az=a^2+3. \end{cases}$

72. $\begin{cases} x^2+xy=24, \\ y^2+xy=12. \end{cases}$

73. $\begin{cases} x^2+3xy=7, \\ xy+4y^2=18. \end{cases}$

74. $\begin{cases} x^2y+xy^2=6, \\ x^3+y^3=9. \end{cases}$

75. $\begin{cases} x^2+x=26-y^2-y, \\ xy=8. \end{cases}$

76. $\begin{cases} \sqrt{xy}=12, \\ x+y-\sqrt{x+y}=20. \end{cases}$

77. $\begin{cases} x^2-y^2=7, \\ x^4-y^4=175. \end{cases}$

78. $\begin{cases} xy-xy^2=-6, \\ x-xy^3=9. \end{cases}$

79. $\begin{cases} xy=x+y, \\ x^2+y^2=8. \end{cases}$

80. $\begin{cases} x^2y^2-4xy=5, \\ x^2+4y^2=29. \end{cases}$

81. $\begin{cases} 2x^3+2y^3=9xy, \\ x+y=3. \end{cases}$

82. $\begin{cases} x^2+xy+y^2=189, \\ x+\sqrt{xy}+y=21. \end{cases}$

83. $\begin{cases} x^{\frac{1}{2}}+y^{\frac{1}{3}}=4, \\ x^{\frac{3}{2}}+y=16. \end{cases}$

84. $\begin{cases} \sqrt{x}-\sqrt{y}=\frac{6}{5}(x-y), \\ \sqrt{xy}=\frac{1}{6}. \end{cases}$

85. A and B hired a carriage for themselves and four friends. If all had paid, A and B would each have had 4 dollars less to pay. What was the cost of hiring the carriage?

86. What number is that to which if 12 is added and from $\frac{1}{1\frac{1}{2}}$ of the sum 12 is subtracted, the remainder is 12?

87. A grocer has two kinds of sirup worth 50 and 80 cents per gallon respectively. How many gallons of each must he take to make a mixture of 45 gallons worth 60 cents a gallon?

88. How many dimes and how many quarters must be taken so that 18 coins are worth \$ 3?

89. In a certain weight of gunpowder the saltpeter was 5 pounds more than half the weight, the sulphur 2 pounds less than a fifth, and the charcoal 1 pound more than a tenth. Find the number of pounds of each.

90. How far down a river whose current runs 3 miles an hour can a steamboat go and return in 8 hours, if its rate of sailing in still water is 12 miles an hour?

91. A woman being asked what she paid for her eggs, replied, "Six dozen cost as many cents as I can buy eggs for 32 cents." What was the price per dozen?

92. A gentleman had not room in his stables for 8 of his horses, so he built an additional stable $\frac{1}{2}$ the size of the other, and then had room for 8 horses more than he had. How many horses had he?

93. In a mass of copper, lead, and tin, the copper was 5 pounds less than half the whole in weight, and the lead and tin each 5 pounds more than $\frac{1}{3}$ of the remainder. Find the weight of each.

94. At what time between 4 and 5 o'clock do the hands of a clock make a straight line?

95. A person who can walk n miles an hour has a hours at his disposal. How far may he ride in a coach that travels m miles an hour and return on foot within the allotted time?

96. A merchant sold half a car load more than half his grain; then he sold half a car load more than half the remainder, when he found that if he could sell half a car load more than half of what he still had, he would have none left. How many car loads of grain had he?

97. Four years ago A's age was $\frac{1}{2}$ of B's, and 4 years hence it will be $\frac{2}{3}$ of B's age. What is the age of each?

98. A person being asked the time of day replied that the time past noon was $\frac{3}{5}$ of the time to midnight. What was the time of day?

99. If 3 is added to each term of a certain fraction, the value of the fraction will be $\frac{5}{7}$; if 3 is subtracted from each term, the value will be $\frac{3}{5}$. What is the fraction?

100. A boatman rows such a distance down a stream that it takes him 4 hours to return. If it takes him 2 hours to row down and the current is 2 miles an hour, what is his rate of rowing in still water?

101. A man received \$ 2.50 per day for every day he worked, and he agreed to forfeit \$ 1.50 for every day he was idle. If he worked 3 times as many days as he was idle and received \$ 24, how many days did he work?

102. A jeweler has two silver cups, and a cover worth \$ 1.50. The first cup with the cover on it is worth $1\frac{7}{8}$ times as much as the second cup, and the second cup with the cover on it is worth $1\frac{1}{12}$ as much as the first cup. Find the value of each cup.

103. Some smugglers discovered a cave that would exactly hold their cargo, which consisted of 13 bales of cotton and 33 casks of wine. While they were unloading, a revenue cutter hove in sight, and they sailed away with 9 casks and 5 bales, leaving the cave two thirds full. How many bales, or how many casks, would the cave hold?

104. Twenty-eight tons of goods are to be transported in carts and wagons, and it is found that it will require 15 carts and 12 wagons, or else 24 carts and 8 wagons. How much can each cart and each wagon carry?

105. There is a number whose three digits are the same. If 7 times the sum of the digits is subtracted from the number, the remainder is 180. What is the number?

106. A and B can do a piece of work in m days, B and C in n days, A and C in p days. In what time can all together do it? How long will it take each alone to do it?

107. Two passengers together have 400 pounds of baggage and are charged, for the excess above the weight allowed free, 40 and 60 cents respectively. If the baggage had belonged to one of them, he would have been charged \$ 1.50. How much baggage is one passenger allowed without charge?

108. Divide 20 into two parts such that the sum of the two fractions formed by dividing each part by the other is $4\frac{1}{4}$.

109. It takes 1000 square tiles of a certain size to pave a hall, or 1440 square tiles whose dimensions are one inch less. Find the area of the hall floor.

110. The sum of two numbers is 16, and the difference of their squares is 128. What are the numbers?

111. Find two numbers such that their sum, their product, and the difference of their squares are all equal.

112. Divide 25 into two parts such that the difference of their square roots is 1.

113. The difference of two numbers is 6, and their product is equal to twice the cube of the less number. What are the numbers?

114. It took a number of men as many days to pave a sidewalk as there were men. Had there been 3 men more, the work would have been done in 4 days. How many men were there?

115. The product of two numbers is 8, and the sum of their squares is 14 greater than the sum of the numbers. What are the numbers?

116. A rectangular lawn 50 feet long and 40 feet wide has a walk of uniform width around it. If the area of the walk is 64 square yards, what is its width?

117. A merchant sold goods for 56 dollars and gained as many hundredths of the cost as there were dollars in the cost. Find the cost of the goods.

118. A person swimming in a stream that runs $1\frac{1}{2}$ miles per hour finds that it takes him 3 times as long to swim a certain distance up the stream as it does to swim the same distance down. What is his rate of swimming in still water?

119. A drover bought some oxen for \$ 900. After 5 had died, he sold the rest at a profit of \$ 20 each and thereby gained \$ 350. How many oxen did he buy?

120. A detachment from an army was marching in regular column with 5 men more in depth than in front. On approaching the enemy, the front was increased by 845 men, and the whole was thus drawn up in 5 lines. Find the number of men in the detachment.

121 A round iron bar weighed 36 pounds. If it had been 1 foot longer and of uniform diameter, each foot of it would have weighed $\frac{1}{2}$ a pound less. Find the length of the iron bar and its weight per foot.

122. A farmer has two cubical granaries. The side of one is 3 yards longer than the side of the other, and the difference of their solid contents is 117 cubic yards. What is the length of the side of each?

123. Two workmen, A and B, were employed at different wages. At the end of a certain number of days A received \$ 30, but B, who had been idle two days in the meantime, received only \$ 19.20. If B had worked the whole time, and A had been idle two days, they would have received equal sums. Find the number of days, and the daily wages of each.

124. By traveling 5 miles an hour less than its usual rate a train was 50 minutes late in running 300 miles. Find the usual rate of speed and the time usually required to make the trip.

125. Find two numbers such that their sum, their product, and the sum of their squares are all equal.

126. A merchant bought two lots of tea, paying for both $34. One lot was 20 pounds more than the other, and the number of cents paid per pound was in each case equal to the number of pounds bought. How many pounds of each did he buy?

127. A and B hired a pasture into which A put 4 horses, and B as many as cost him 18 shillings per week. Afterward B put in 2 additional horses, and found that he must pay 20 shillings per week. How much was paid for the pasture per week?

128. By lowering the selling price of apples 1 cent a dozen, an apple woman finds that she can sell 60 more than she used to sell for 60 cents. At what price per dozen did she sell them at first?

129. A and B are two stations 300 miles apart. Two trains start at the same time, one from A, the other from B, and travel to the opposite station. If the first train reaches B 9 hours after the trains meet, and the second train reaches A 4 hours after they meet, when do they meet, and what is the rate of each train?

130. If a carriage wheel $14\frac{2}{3}$ feet in circumference takes one second longer to revolve, the rate of traveling will be $2\frac{2}{3}$ miles less per hour. How fast is the carriage traveling?

131. A railway train, after traveling 2 hours, was detained 1 hour by an accident. It then proceeded at $\frac{3}{5}$ of its former rate, and arrived $7\frac{2}{3}$ hours behind time. If the accident had occurred 50 miles farther on, the train would have arrived $6\frac{1}{3}$ hours behind time. What was the whole distance traveled by the train?

132. A person rents a certain number of acres of land for $200. He retains 5 acres for his own use and sublets the rest at $1 an acre more than he gave. If he receives $10 more than he pays for the whole, how many acres does he rent, and at what rate per acre?

133. A and B left Chicago and walked in the same direction at uniform rates. B started 2 hours after A and overtook him at the 30th milestone. Had each traveled half a mile more per hour, B would have overtaken A at the 42d milestone. At what rate did each travel?

RATIO AND PROPORTION

308. 1. What is the relation of $10\,x$ to $5\,x$? of $3\,x$ to $12\,x$? of $8\,a$ to $2\,a$? of $14\,m$ to $7\,m$? of $4\,a$ to $8\,a$? of $2\,b$ to $6\,b$?

2. In finding the relation, or *ratio*, of $10\,a$ to $5\,a$, which is the dividend, the number that *precedes*, or the number that *follows*? Which is the divisor?

3. What is the ratio of a to b? Since b may not be exactly contained in a, how may the ratio be expressed?

4. Since the ratio of two numbers may be expressed in the form of a fraction, what operations may be performed upon the terms of a ratio without changing the ratio?

309. The relation of two numbers that is expressed by the quotient of the first divided by the second is called their **Ratio**.

310. The **Sign of Ratio** is a colon (:).

A ratio is also expressed in the form of a fraction.

The ratio of a to b is written $a : b$ or $\frac{a}{b}$.

The colon is sometimes regarded as derived from the sign of division by omitting the line.

311. The first term of a ratio is called the **Antecedent.**
It corresponds to a dividend, or numerator.

312. The second term of a ratio is called the **Consequent.**
It corresponds to a divisor, or denominator.

313. The antecedent and consequent form a **Couplet.**

In the ratio $a : b$, or $\frac{a}{b}$, a is the antecedent, b the consequent, and the terms a and b form a couplet.

314. The ratio of the reciprocals of two numbers is called the **Reciprocal,** or **Inverse Ratio** of the numbers.

It may be expressed by interchanging the terms of the ratio of the numbers.

The inverse ratio of a to b is $\frac{1}{a} : \frac{1}{b}$. Since $\frac{1}{a} \div \frac{1}{b} = \frac{b}{a}$, the inverse ratio of a to b may be written $\frac{b}{a}$, or $b : a$.

315. The ratio of the squares of two numbers is called the **Duplicate** ratio; the ratio of their cubes, the **Triplicate** ratio; the ratio of their square roots, the **Subduplicate** ratio; the ratio of their cube roots, the **Subtriplicate** ratio of the numbers.

The duplicate ratio of a to b is $a^2 : b^2$; the triplicate ratio, $a^3 : b^3$; the subduplicate ratio, $\sqrt{a} : \sqrt{b}$; the subtriplicate ratio, $\sqrt[3]{a} : \sqrt[3]{b}$.

316. PRINCIPLE. — *Multiplying or dividing both terms of a ratio by the same number does not change the ratio.*

EXAMPLES

1. What is the ratio of $8\,m$ to $4\,m$? of $4\,m$ to $8\,m$?

2. Express the ratio of $6 : 9$ in its lowest terms; $12\,x : 16\,y$; $am : bm$; $20\,ab : 10\,bc$; $(m + n) : (m^2 - n^2)$.

3. Which is the greater ratio, $2 : 3$ or $3 : 4$? $4 : 9$ or $2 : 5$?

4. What is the ratio of $\frac{1}{2}$ to $\frac{1}{4}$? $\frac{1}{2}$ to $\frac{1}{3}$? $\frac{2}{3}$ to $\frac{3}{4}$?

SUGGESTION. — When fractions have a common denominator, they have the ratio of their numerators.

5. Reduce $a : b$ and $x : y$ to ratios having the same consequent.

6. When the antecedent is $6\,x$ and the ratio is $\frac{1}{3}$, what is the consequent?

317. It is evident from § 316, that the ratio of two rational fractions may be expressed by the ratio of two integers.

For example, $\frac{m}{n} : \frac{b}{y}$ may be reduced to the form $\frac{m}{n} \times ny : \frac{b}{y} \times ny$, or $my : bn$.

But the ratio of two numbers, when one is rational and the other irrational or when they are dissimilar surds, cannot be expressed by the ratio of two integers.

Thus, the ratio $\sqrt{2} : 3$ cannot be expressed by any two integers.

318. If the ratio of two numbers can be expressed by the ratio of two integers, the numbers are called **Commensurable Numbers,** and their ratio a **Commensurable Ratio.**

319. If the ratio of two numbers cannot be expressed by the ratio of two integers, the numbers are called **Incommensurable Numbers,** and their ratio an **Incommensurable Ratio.**

The ratio $\sqrt{2} : 3 = \frac{\sqrt{2}}{3} = \frac{1.414213+}{3}$ cannot be expressed by any two integers, because there is no number that, used as a common *measure*, will be contained in both $\sqrt{2}$ and 3 an integral number of times. Hence, $\sqrt{2}$ and 3 are incommensurable, and $\sqrt{2} : 3$ is an incommensurable ratio.

It is evident that by continuing the process of extracting the square root of 2, the ratio $\sqrt{2} : 3$ may be expressed by two integers to any desired degree of approximation, but never with absolute accuracy.

320. 1. What two numbers have the same relation to each other as 2 to 3?

2. Name several couplets that express the same ratio as $2 : 5$. How may it be indicated that the ratio of 2 to 5 is the *same* as that of $2a$ to $5a$?

3. What number has the same ratio to $12a$ that $5b$ has to $3b$?

4. What number has the same ratio to $10a$ that $10a$ has to 2? How does this number times 2 compare with $10a$?

321. An equality of ratios is called a **Proportion.**

$3 : 10 = 6 : 20$ and $a : x = b : y$ are proportions.

The double colon (: :) is often used instead of the sign of equality.

The double colon has been supposed to represent the extremities of the lines that form the sign of equality.

The proportion $a : b = c : d$, or $a : b : : c : d$, is read, the ratio of a to b is equal to the ratio of c to d, or a is to b as c is to d.

322. The antecedents and consequents of the ratios that form a proportion are called the **Antecedents** and **Consequents,** respectively, of the proportion.

In $a : b = c : d$, the antecedents of the proportion are a and c, and the consequents are b and d.

323. The first and fourth terms of a proportion are called the **Extremes** of the proportion.

In the proportion $a : b = c : d$, the extremes are a and d.

324. The second and third terms of a proportion are called the **Means** of the proportion.

In the proportion $a : b = c : d$, the means are b and c.

325. The terms of a proportion are also called **Proportionals**. In the proportion $a : b = b : c$, b is called a *Mean Proportional* between a and c, and c is called a *Third Proportional* to a and b.

In the proportion $a : b = c : d$, d is called a *Fourth Proportional* to a, b, and c.

Since a proportion is an equality of ratios each of which may be expressed as a fraction, a proportion may be expressed as an equation each member of which is a fraction. Hence, it follows that:

326. General Principle. — *The changes that may be made upon a proportion without destroying the equality of its ratios are based upon the changes that may be made upon the members of an equation without destroying their equality and upon the terms of a fraction without altering the value of the fraction.*

PRINCIPLES OF PROPORTION

327. 1. Let any four numbers form a proportion, as $a : b = c : d$.

2. Express the proportion as a fractional equation.

3. If this equation is cleared of fractions, what terms of the proportion does the first member contain? the second member?

Principle 1. — *In any proportion the product of the extremes is equal to the product of the means.*

If $a : b = c : d$, then, $ad = bc$.

Since a mean proportional serves as both means of a proportion, if $a : b = b : c$, $b^2 = ac$, or $b = \sqrt{ac}$. Hence,

The mean proportional between two numbers is equal to the square root of their product.

Principle 1 may be established as follows:

Let $a : b = c : d$ represent any proportion.

Then, § 310, $\frac{a}{b} = \frac{c}{d}$.

Clearing of fractions, $ad = bc$.

Therefore, the product of the extremes is equal to the product of the means.

NUMERICAL ILLUSTRATION

$$2 : 5 = 6 : 15.$$

$$2 \times 15 = 5 \times 6.$$

$$30 = 30.$$

328. 1. Transform the proportion $a : b = c : d$ in accordance with Prin. 1.

2. Since $ad = bc$, how may the value of a be found? the value of d? What terms of the proportion are a and d?

3. How, then, may either extreme of a proportion be found? How may either mean be found?

PRINCIPLE 2. — *Either extreme of a proportion is equal to the product of the means divided by the other extreme. Either mean is equal to the product of the extremes divided by the other mean.*

If $a : b = c : d$, then, $a = \frac{bc}{d}$, $b = \frac{ad}{c}$, etc.

Demonstrate Prin. 2, and give numerical illustrations.

329. 1. If $ad = bc$, what will be the resulting proportion when both members are divided by bd and reduced?

2. What do the factors of ad, the first member of the equation, form in the proportion? What do the factors of bc form?

PRINCIPLE 3. — *If the product of two numbers is equal to the product of two other numbers, one pair of them may be made the extremes and the other pair the means of a proportion.*

If $ad = bc$, then, $a : b = c : d$, or $b : a = d : c$, etc.

Demonstrate Prin. 3, and give numerical illustrations.

330. 1. Change the proportion $a : b = c : d$ into an integral equation by Prin. 1.

2. Divide the members of this equation by cd and reduce.

3. What terms of the given proportion now form the first couplet? the second couplet?

PRINCIPLE 4. — *If four numbers are in proportion, the ratio of the antecedents is equal to the ratio of the consequents;* that is, *the numbers are in proportion by* **Alternation.**

If $a : b = c : d$, then, $a : c = b : d$.

Demonstrate Prin. 4, and give numerical illustrations.

331. 1. Change the proportion $a : b = c : d$ into an integral equation by Prin. 1.

2. Divide the members of this equation, $bc = ad$, by ac, and reduce.

3. What change has taken place in the order of the terms of each couplet?

PRINCIPLE 5. — *If four numbers are in proportion, the ratio of the second to the first is equal to the ratio of the fourth to the third;* that is, *the numbers are in proportion by* **Inversion.**

If $a : b = c : d$, then, $b : a = d : c$.

Demonstrate Prin. 5, and give numerical illustrations.

332. 1. Express the proportion $a : b = c : d$ as a fractional equation.

2. Add 1 to each member and reduce the mixed numbers to fractional form. Write in the form of a proportion.

3. How may the terms of this proportion be formed from the terms of the given proportion?

4. Since, when $a : b = c : d$, $b : a = d : c$, if the changes just indicated are made in the second proportion, how may the terms of the resulting proportion be obtained from the terms of the original proportion?

PRINCIPLE 6. — *If four numbers are in proportion, the sum of the terms of the first ratio is to either term of the first ratio as the sum of the terms of the second ratio is to the corresponding term of the second ratio ;* that is, *the numbers are in proportion by* **Composition.**

If $a : b = c : d$, then, $a + b : b = c + d : d$ and $a + b : a = c + d : c$.

Demonstrate Prin. 6, and give numerical illustrations.

333. 1. Express the proportion $a : b = c : d$ as a fractional equation.

2. Subtract 1 from each member, and reduce the mixed numbers to fractional form. Write in the form of a proportion.

3. How may the terms of this proportion be formed from the terms of the given proportion ?

4. Since, when $a : b = c : d$, $b : a = d : c$, if the changes just indicated are made in the second proportion, how may the terms of the resulting proportion be obtained from the terms of the original proportion ?

PRINCIPLE 7. — *If four numbers are in proportion, the difference between the terms of the first ratio is to either term of the first ratio as the difference between the terms of the second ratio is to the corresponding term of the second ratio ;* that is, *the numbers are in proportion by* **Division**.

If $a : b = c : d$, then, $a - b : b = c - d : d$ and $a - b : a = c - d : c$.

Demonstrate Prin. 7, and give numerical illustrations.

334. 1. Change the proportion $a : b = c : d$ according to Prin. 6, and also according to Prin. 7, using the same consequents in each transformation. Express in fractional form.

2. Divide the first equation by the second.

3. How may the terms of the resulting proportion be formed from the terms of the given proportion ?

PRINCIPLE 8. — *If four numbers are in proportion, the sum of the terms of the first ratio is to their difference as the sum of the*

terms of the second ratio is to their difference; that is, *the numbers are in proportion by* **Composition** *and* **Division**.

If $a : b = c : d$, $a+b : a-b = c+d : c-d$ and $a+b : b-a = c+d : d-c$.

Demonstrate Prin. 8, and give numerical illustrations.

335. 1. Express the proportion $a : b = c : d$ as a fractional equation.

2. Raise each member to the nth power.

3. Also express the nth root of each member.

4. How may these proportions be formed from the given proportion?

PRINCIPLE 9. — *If four numbers are in proportion, their like powers, and also their like roots, will be in proportion.*

If $a : b = c : d$, then, $a^n : b^n = c^n : d^n$ and $a^{\frac{1}{n}} : b^{\frac{1}{n}} = c^{\frac{1}{n}} : d^{\frac{1}{n}}$.

Demonstrate Prin. 9, and give numerical illustrations.

336. 1. Express $a : b = c : d$ as a fractional equation.

2. What may be done to a fraction without changing its value?

3. Multiply the terms of the first fraction by m and the terms of the second fraction by n. Write as a proportion.

4. How may the terms of this proportion be formed from the terms of the given proportion?

5. Take the given proportion by alternation and multiply the terms of the first couplet by m and those of the second couplet by n.

6. How may the terms of this proportion be formed from the terms of the given proportion?

7. How may the given proportion be formed from the proportions $ma : mb = nc : nd$ and $ma : nb = mc : nd$?

PRINCIPLE 10. — *In a proportion, if both terms of a couplet, or both antecedents, or both consequents are multiplied or divided by the same number, the resulting four numbers form a proportion.*

If $a : b = c : d$, then, $ma : mb = nc : nd$ and $ma : nb = mc : nd$; also, if $ma : mb = nc : nd$, or if $ma : nb = mc : nd$, then, $a : b = c : d$.

Demonstrate Prin. 10, and give numerical illustrations.

337. 1. Express the proportions $a : b = c : d$ and $x : y = z : w$ as fractional equations.

2. How may two equations be combined (Ax. 4 and 5)? Combine these two equations and write the results as proportions.

3. How may these proportions be formed from the given proportions?

PRINCIPLE 11. — *The products, and also the quotients, of corresponding terms of two proportions form a proportion.*

If $a : b = c : d$ and $x : y = z : w$, $ax : by = cz : dw$, also $\frac{a}{x} : \frac{b}{y} = \frac{c}{z} : \frac{d}{w}$.

Demonstrate Prin. 11, and give numerical illustrations.

338. If $a : b = c : d$ and $c : d = e : f$, how does the ratio $a : b$ compare in value with the ratio $e : f$?

PRINCIPLE 12. — *If two proportions have a common couplet, the other two couplets will form a proportion.*

If $a : b = c : d$ and $c : d = e : f$, then, $a : b = e : f$.

Demonstrate Prin. 12, and give numerical illustrations (Ax. 1).

339. A proportion that consists of three or more equal ratios is called a **Multiple Proportion.**

$2 : 4 = 3 : 6 = 5 : 10$ and $a : b = c : d = e : f$ are multiple proportions.

340. A multiple proportion in which each consequent serves also as the antecedent of the following ratio is called a **Continued Proportion.**

$2 : 4 = 4 : 8 = 8 : 16$ and $a : b = b : c = c : d$ are continued proportions.

341. 1. Form a multiple proportion, as

$$2 : 4 = 3 : 6 = 5 : 10 = 10 : 20.$$

2. How does the ratio of the sum of the antecedents to the sum of the consequents compare with the first ratio? with the second ratio? with the ratio of any antecedent to its consequent?

3. Investigate other multiple proportions.

PRINCIPLE 13. — *In any multiple proportion the sum of the antecedents is to the sum of the consequents as any antecedent is to its consequent.*

Principle 13 may be established as follows:

Let $a : b = c : d = e : f = g : h.$

It is to be proved that

$$a + c + e + g : b + d + f + h = a : b, \text{ or } c : d, \text{ etc.}$$

Denoting each of the equal ratios by r,

$$\frac{a}{b} = r, \quad \frac{c}{d} = r, \quad \frac{e}{f} = r, \quad \frac{g}{h} = r. \tag{1}$$

Hence, $$a = br, \quad c = dr, \quad e = fr, \quad g = hr. \tag{2}$$

Adding equations (2),

$$a + c + e + g = (b + d + f + h)r. \tag{3}$$

Dividing by $(b + d + f + h)$,

$$\frac{a + c + e + g}{b + d + f + h} = r.$$

Replacing r by any of the equal ratios,

$$\frac{a + c + e + g}{b + d + f + h} = \frac{a}{b} = \frac{c}{d}, \text{ etc.}$$

That is, $a + c + e + g : b + d + f + h = a : b$, or $c : d$, etc.

EXAMPLES

342. 1. In the proportion $3 : 5 = x : 55$, what is the value of x?

FIRST SOLUTION

$3 : 5 = x : 55.$

Prin. 2, $$x = \frac{3 \cdot 55}{5} = 33.$$

SECOND SOLUTION

$3 : 5 = x : 55.$

Prin. 10, $3 : 1 = x : 11.$

Prin. 1, $x = 33.$

Find the value of x in each of the following proportions:

2. $2 : 3 = 6 : x.$

3. $5 : x = 4 : 3.$

4. $1 : x = x : 9.$

5. $8 : 5 = x : 10.$

6. $x+1 : x = 8 : 6$.

7. $x : x-1 = 15 : 12$.

8. $x+2 : x = 10 : 6$.

9. $x+2 : x-2 = 3 : 1$.

10. If $x+5 : x-5 = 5 : 3$, find the value of x.

11. What two numbers are mean proportionals between 1 and 25?

12. Show that a mean proportional between any two numbers has the sign $\pm$.

When $a : b = c : d$, prove that the following proportions are true by deriving them from $a : b = c : d$:

13. $d : b = c : a$.

14. $c : d = \frac{1}{b} : \frac{1}{a}$.

15. $b^3 : d^3 = a^3 : c^3$.

16. $a^2 : b^2c^2 = 1 : d^2$.

17. $ma : \frac{b}{2} = mc : \frac{d}{2}$.

18. $ac : bd = c^2 : d^2$.

19. $\sqrt{ad} : \sqrt{b} = \sqrt{c} : 1$.

20. $a+b : c+d = a-b : c-d$.

21. $a^3 + a^2b + ab^2 + b^3 : a^3 = c^3 + c^2d + cd^2 + d^3 : c^3$.

22. $2a+3c : 2a-3c = 8b+12d : 8b-12d$.

23. Solve the equation $\frac{a^2+x^2}{ax} = \frac{41}{20}$.

SOLUTION

$$\frac{a^2+x^2}{ax} = \frac{41}{20}.$$

Dividing by 2, $$\frac{a^2+x^2}{2ax} = \frac{41}{40}.$$

Regarding this equation as a proportion,

by composition and division, $$\frac{a^2+2ax+x^2}{a^2-2ax+x^2} = \frac{81}{1}.$$

Extracting the square root, $$\frac{a+x}{a-x} = \frac{9}{1}.$$

By composition and division, $$\frac{2a}{2x} = \frac{10}{8}.$$

$$\therefore\ x = \tfrac{4}{5}a.$$

24. Solve the equation $\dfrac{\sqrt{x+7}+\sqrt{x}}{4+\sqrt{x}}=\dfrac{\sqrt{x+7}-\sqrt{x}}{4-\sqrt{x}}$.

SOLUTION

$$\frac{\sqrt{x+7}+\sqrt{x}}{4+\sqrt{x}}=\frac{\sqrt{x+7}-\sqrt{x}}{4-\sqrt{x}}.$$

By alternation, Prin. 4, $\dfrac{\sqrt{x+7}+\sqrt{x}}{\sqrt{x+7}-\sqrt{x}}=\dfrac{4+\sqrt{x}}{4-\sqrt{x}}$.

By composition and division, Prin. 8,

$$\frac{2\sqrt{x+7}}{2\sqrt{x}}=\frac{8}{2\sqrt{x}}.$$

Since the consequents are equal, the antecedents are equal.

Therefore, $2\sqrt{x+7}=8$.

Whence, reducing, $x=9$.

25. Given $\dfrac{\sqrt{x+11}+2}{\sqrt{x+11}-2}=\dfrac{\sqrt{2x+14}+2\frac{2}{3}}{\sqrt{2x+14}-2\frac{2}{3}}$, to find x.

SOLUTION

$$\frac{\sqrt{x+11}+2}{\sqrt{x+11}-2}=\frac{\sqrt{2x+14}+2\frac{2}{3}}{\sqrt{2x+14}-2\frac{2}{3}}.$$

By composition and division, Prin. 8,

$$\frac{2\sqrt{x+11}}{4}=\frac{2\sqrt{2x+14}}{\frac{16}{3}}.$$

Dividing both terms of each ratio by 2, Prin. 10,

$$\frac{\sqrt{x+11}}{2}=\frac{\sqrt{2x+14}}{\frac{8}{3}}.$$

Dividing the consequents by $\frac{2}{3}$, Prin. 10,

$$\frac{\sqrt{x+11}}{3}=\frac{\sqrt{2x+14}}{4}.$$

By alternation, Prin. 4, $\dfrac{\sqrt{x+11}}{\sqrt{2x+14}}=\dfrac{3}{4}$.

Squaring, and applying Prin. 7, $\dfrac{x+11}{x+3}=\dfrac{9}{7}$.

Solving, $x=25$.

Solve by the principles of proportion:

26. $\dfrac{\sqrt{x}+\sqrt{m}}{\sqrt{x}-\sqrt{m}}=\dfrac{m}{n}$.

27. $\dfrac{\sqrt{x}+\sqrt{2\,a}}{\sqrt{x}-\sqrt{2\,a}}=\dfrac{2}{1}$.

28. $\dfrac{x+\sqrt{x-1}}{x-\sqrt{x-1}}=\dfrac{13}{7}$.

29. $\dfrac{\sqrt{x+b}+\sqrt{x-b}}{\sqrt{x+b}-\sqrt{x-b}}=a$.

30. $\dfrac{\sqrt{a}+\sqrt{a-x}}{\sqrt{a}-\sqrt{a-x}}=\dfrac{1}{a}$.

31. $\dfrac{\sqrt{ax}-b}{\sqrt{ax}+b}=\dfrac{3\sqrt{ax}-2\,b}{3\sqrt{ax}+5\,b}$.

32. Given $\dfrac{\sqrt{x+2}+\sqrt{x}+1}{\sqrt{x+2}+\sqrt{x}-1}=\dfrac{3}{1}$, to find x.

33. Given $\dfrac{\sqrt{a}+\sqrt{a+x}}{\sqrt{a}-\sqrt{a+x}}=\dfrac{\sqrt{b}+\sqrt{x-b}}{\sqrt{b}-\sqrt{x-b}}$, to find x.

34. Given $\dfrac{a-\sqrt{2\,ax-x^2}}{a+\sqrt{2\,ax-x^2}}=\dfrac{a-b}{a+b}$, to find x.

35. Given $\dfrac{\sqrt{x+1}+\sqrt{x-2}}{\sqrt{x+1}-\sqrt{x-2}}=\dfrac{\sqrt{x-3}+\sqrt{x-4}}{\sqrt{x-3}-\sqrt{x-4}}$, to find x.

36. Divide \$ 35 between two men so that their shares shall be in the ratio of 3 to 4.

37. Two numbers are in the ratio of 3 to 2, and if each is increased by 4, the sums will be in the ratio of 4 to 3. What are the numbers?

38. Divide 16 into two parts such that their product is to the sum of their squares as 3 is to 10.

39. Divide 25 into two parts such that the greater increased by 1 is to the less decreased by 1 as 4 is to 1.

40. The sum of two numbers is 4, and the square of their sum is to the sum of their squares as 8 is to 5. What are the numbers?

41. A dealer had two casks of wine. From the larger he drew 34 gallons, and from the smaller 8 gallons, after which their contents were as 5 to 4. When half the original contents of each cask had been drawn, he put 8 gallons into the larger and 6 into the smaller. If the ratio of their contents was then 5 to 3, what was the capacity of each?

VARIATION

343. One quantity or number is said to **vary directly** as another, or simply to **vary** as another, when they depend on each other in such a manner that if one is changed the other is changed *in the same ratio.*

Thus, if a man earns a certain sum per day, the amount of wages he earns *varies* as the number of days he works.

344. The **Sign of Variation** is $\propto$. It is read 'varies as.'

345. The expression $x \propto y$ means that if x is doubled, y is doubled, or if x is divided by a number, y is divided by the same number, etc.; that is, that the ratio of x to y is always the same, or constant.

If the constant ratio is represented by k, then when $x \propto y$, $\frac{x}{y} = k$, or $x = ky$. Hence,

If x varies as y, x is equal to y multiplied by a constant.

346. One quantity or number varies **inversely** as another when it varies as the *reciprocal* of the *other.*

Thus, the time required to do a certain piece of work varies *inversely* as the number of men employed. For, if it takes 10 men 4 days to do a piece of work, it will take 5 men 8 days, or 4 men 10 days, to do it.

In $x \propto \frac{1}{y}$, if the constant ratio of x to $\frac{1}{y}$ is k, $\frac{x}{\frac{1}{y}} = k$, or $xy = k$. Hence,

If x varies inversely as y, their product is constant.

347. One quantity or number varies **jointly** as two others when it varies as their product.

Thus, the amount of money a man earns varies *jointly* as the number of days he works and the sum he receives per day. For, if he should work three times as many days, and receive twice as many dollars per day, he would receive six times as much money.

In $x \propto yz$, if the constant ratio of x to yz is k,

$$\frac{x}{yz} = k, \text{ or } x = kyz. \quad \text{Hence,}$$

If x varies jointly as y and z, x is equal to their product multiplied by a constant.

348. One quantity or number varies **directly** as a second and **inversely** as a third when it varies *jointly* as the second and the reciprocal of the third.

Thus, the time required to dig a ditch varies *directly* as the length of the ditch and *inversely* as the number of men employed. For, if the ditch were 10 times as long and 5 times as many men were employed, it would take twice as long to dig it.

In $x \propto y \cdot \frac{1}{z}$, or $x \propto \frac{y}{z}$, if k is the constant ratio,

$$x \div \frac{y}{z} = k, \text{ or } x = k\frac{y}{z}. \quad \text{Hence,}$$

If x varies directly as y and inversely as z, x is equal to $\frac{y}{z}$ multiplied by a constant.

349. *If x varies as y when z is constant, and x varies as z when y is constant, then x varies as yz when both y and z are variable.*

PROOF. — Since the variation of x depends on the variations of y and z, suppose the latter variations to take place in succession, each in turn producing a corresponding variation in x.

While z remains constant, let y change to y_1,* thus causing x to change to x'.

Then,
$$\frac{x}{x'} = \frac{y}{y_1}. \tag{1}$$

Now while y keeps the value y_1, let z change to z_1, thus causing x' to change to x_1.

Then,
$$\frac{x'}{x_1} = \frac{z}{z_1}. \tag{2}$$

* In algebraic notation x_1, x_2, x_3, etc., are read 'x sub one,' 'x sub two,' 'x sub three,' etc.

Multiplying (1) by (2), $\dfrac{x}{x_1} = \dfrac{yz}{y_1 z_1}$.

$$\therefore\ x = \frac{x_1}{y_1 z_1} \cdot yz = kyz,$$

where k is the constant $\dfrac{x_1}{y_1 z_1}$.

Hence, $x \propto yz$.

Thus, the area of a triangle varies as the base when the altitude is constant, varies as the altitude when the base is constant, and varies as the product of the base and altitude when both vary.

Similarly, if x varies as each of three or more numbers, y, z, v, $\cdots$ when the others are constant, when all vary x varies as their product.

That is, $x \propto yzv \cdots$.

Thus, the volume of a parallelopiped varies as the length, if the width and thickness are constant; as the width, if the length and thickness are constant; as the thickness, if the length and width are constant; as the product of any two dimensions, if the other is constant; or as the product of the three dimensions, if all vary.

Examples

350. 1. If x varies inversely as y, and $x = 6$ when $y = 8$, what is the value of x when $y = 12$?

Solution

Since $x \propto \dfrac{1}{y}$, let k be the constant ratio of x to $\dfrac{1}{y}$.

Then, § 346, $xy = k$. (1)

Hence, when $x = 6$ and $y = 8$,

$k = 6 \times 8$, or 48. (2)

Since k is constant, $k = 48$ when $y = 12$.

Hence, Eq. (1) becomes $12x = 48$.

Therefore, when $y = 12$, $x = 4$.

2. The volume of a cone varies jointly as its altitude and the square of the diameter of its base. When the altitude is 15 and the diameter of the base is 10, the volume is 392.7. What is the volume, when the altitude is 5 and the diameter of the base is 20?

SOLUTION

Let V, H, and D denote the volume, altitude, and diameter of the base, respectively, of any cone, and v the volume of a cone whose altitude is 5 and the diameter of whose base is 20.

Since $V \propto HD^2$, or $V = kHD^2$,

and $V = 392.7$ when $H = 15$ and $D = 10$,

$$392.7 = k \times 15 \times 100. \quad (1)$$

Also, since V becomes v when $H = 5$ and $D = 20$,

$$v = k \times 5 \times 400. \quad (2)$$

Dividing (2) by (1), $$\frac{v}{392.7} = \frac{5 \times 400}{15 \times 100} = \frac{4}{3}. \quad (3)$$

$$\therefore v = \tfrac{4}{3} \text{ of } 392.7 = 523.6.$$

3. If $x \propto y$ and $y \propto z$, prove that $x \propto z$.

PROOF

Since $x \propto y$ and $y \propto z$, let m represent the constant ratio of x to y, and n the constant ratio of y to z.

Then, § 345, $$x = my, \quad (1)$$

and $$y = nz. \quad (2)$$

Substituting nz for y in (1), $$x = mnz. \quad (3)$$

Hence, since mn is constant, $x \propto z$.

4. The circumference of a circle varies as its diameter. If the circumference of a circle whose diameter is 1 foot is 3.1416 feet, what is the circumference of a circle whose diameter is 100 feet?

5. The area of a circle varies as the square of its diameter. If the area of a circle whose diameter is 10 feet is 78.54 square feet, what is the area of a circle whose diameter is 20 feet?

6. The distance a body falls from rest varies as the square of the time of falling. If a stone falls 64.32 feet in 2 seconds, how far will it fall in 5 seconds?

7. The area of a triangle varies jointly as its base and altitude. The area of a triangle whose base is 12 inches and altitude 6 inches is 36 square inches. What is the area of a triangle whose base is 8 inches and altitude 10 inches? What is the constant ratio?

8. A wrought iron bar 1 square inch in cross section and 1 yard long weighs 10 pounds. If the weight of a uniform bar of given material varies jointly as its length and the area of its cross section, what is the weight of a wrought iron bar 36 feet long, 4 inches wide, and 4 inches thick?

9. The weight of a beam varies jointly as the length, the area of the cross section, and the material of which it is composed. If wood is $\frac{1}{12}$ as heavy as wrought iron, what is the weight of a wooden beam 24 feet long, 12 inches wide, and 12 inches thick?

10. What is the weight of a brick 2 in. $\times$ 4 in. $\times$ 8 in., if the material is $\frac{1}{4}$ as heavy as wrought iron?

11. If 10 men can do a piece of work in 20 days, how long will it take 25 men to do it?

12. If a men can do a piece of work in b days, how many men will be required to do it in c days?

13. The distances, from the fulcrum of a lever, of two weights that balance each other vary inversely as the weights. If two boys weighing 80 and 90 pounds, respectively, are balanced on the ends of a board $8\frac{1}{2}$ feet long, how much of the board has each?

14. A water carrier carries two buckets of water suspended from the ends of a 4-foot stick that rests on his shoulder. If one bucket weighs 60 pounds and the other 100 pounds, and they balance each other, what point of the stick rests on his shoulder?

15. The weight of a body near the earth varies inversely as the square of its distance from the center of the earth. If the radius of the earth is 4000 miles, what would be the weight of a 4-lb. brick at the distance of 4000 miles from the earth's surface?

16. A boy wishes to ascertain the height of a tower. He knows that it is 31 feet 6 inches from his window to the pavement below, and that the distance through which a body falls varies as the square of the time of falling. He drops a marble from his window and finds that it strikes the pavement in 1.4 seconds. Then he throws a stone to the top of the tower and observes that it takes just 3 seconds for it to descend. What is the height of the tower?

17. A horse tied with a rope 45 feet long to a stake in the center of a pasture eats all the grass within reach in $1\frac{1}{2}$ days. If his rope were 15 feet longer, how many days would it take him to eat all the grass within reach?

18. The illumination from a source of light varies inversely as the square of the distance. How far must a screen that is 10 feet from a lantern be moved so as to receive one fourth as much light?

19. The number of times a pendulum oscillates in a given time varies inversely as the square root of its length. If a pendulum 39.1 inches long oscillates once a second, what is the length of a pendulum that oscillates twice a second?

20. How long must a pendulum be to oscillate once in three seconds?

21. If $x \propto \frac{y}{z}$, and if $x = 2$ when $y = 12$ and $z = 2$, what is the value of x when $y = 84$ and $z = 7$?

22. If $x \propto \frac{y}{z}$, and if $x = 60$ when $y = 24$ and $z = 2$, what is the value of y when $x = 20$ and $z = 7$?

23. If x varies jointly as y and z and inversely as the square of w, and if $x = 30$ when $y = 3$, $z = 5$, and $w = 4$, what is the value of x expressed in terms of y, z, and w?

24. If $x \propto \frac{1}{y}$ and $y \propto \frac{1}{z}$, prove that $x \propto z$.

25. If $x \propto y$ and $z \propto y$, prove that $(x \pm z) \propto y$.

26. Three spheres of lead whose radii are 6, 8, and 10 in., respectively, are united into one. Find the radius of the resulting sphere, if the volume of a sphere varies as the cube of its radius.

27. The volume of a cone varies jointly as its altitude and the square of the diameter of its base. The altitudes of three cones, S, P, and R, are 30 ft., 10 ft., and 5 ft., respectively. The diameter of the base of P is 5 ft. and that of R is 10 ft. If the volume of S is equivalent to that of P and R combined, what is the diameter of the base of S?

PROGRESSIONS

351. 1. How does each of the numbers 2, 4, 6, 8, 10, 12, ... compare with the number that follows it? How may any *term* after the first be obtained from the preceding term?

2. How may any term of 2, $2\frac{1}{2}$, 3, $3\frac{1}{2}$, ... after the first be obtained from the preceding term?

3. Write a *series* of six terms beginning with a and increasing by a constant number d.

4. How may any term, after the first, of the series 3, 6, 12, 24, 48, ... be obtained from the preceding term?

5. How may any term, after the first, of the series 1, $\frac{1}{2}$, $\frac{1}{4}$, $\frac{1}{8}$, ... be obtained from the preceding term?

6. Write a series of six terms beginning with a and increasing by a constant multiplier r.

352. A succession of numbers, each of which after the first is derived from the preceding number or numbers according to some fixed law, is called a **Series**.

353. The successive numbers are called the **Terms** of the series. The first and last terms of a series are the *Extremes*, the intervening terms the *Means*.

In the series a, $a + d$, $a + 2\,d$, $a + 3\,d$, $a + 4\,d$, the terms a and $a + 4\,d$ are the extremes and the other terms are the means.

354. A series consisting of a limited number of terms is called a **Finite Series**.

355. A series consisting of an unlimited number of terms is called an **Infinite Series**.

ARITHMETICAL PROGRESSION

356. A series each term of which after the first is derived from the preceding by the addition of a constant number is called an **Arithmetical Series,** or an **Arithmetical Progression.**

357. The number added to any term to produce the next is called the **Common Difference.**

2, 4, 6, 8, ··· and 15, 12, 9, 6, ··· are arithmetical progressions. In the first, the common difference is 2 and the series is ascending; in the second, the common difference is -3 and the series is descending.

A.P. is an abbreviation of the words *Arithmetical Progression.*

358. To find the *n*th, or last term.

1. In the arithmetical progression x, $x+2$, $x+4$, $x+6$, what is the common difference? How many times does it enter into the second term? into the third term? into the fourth term?

2. From the first term of the series a, $a+d$, $a+2d$, $a+3d$, ··· how is the second term formed? the third term? the fourth term? the fifth term? the nth term, or any term?

3. What is the nth term of the series a, $a-d$, $a-2d$, ···?

359. When a represents the first term of an A.P., d the common difference, l the nth, or last term, and n the number of terms,

$$l = a + (n-1)d. \qquad \text{(I)}$$

Examples

1. What is the 10th term of the series 3, 6, 9, ···?

PROCESS

$l = a + (n-1)d$
$l = 3 + (10-1)3$
$l = 30$

EXPLANATION. — Since the series 3, 6, 9, ··· is an A.P. the common difference of whose terms is 3, substituting 3 for a, 3 for d, and 10 for n in the formula for the last term, the last term is found to be 30.

2. Find the 20th term of the series 7, 11, 15, ···.

3. Find the 16th term of the series 2, 7, 12, ···.

4. Find the 24th term of the series 1, 16, 31, ···.

5. Find the 18th term of the series 1, 8, 15, ….

6. Find the 13th term of the series -3, 1, 5, ….

7. Find the 49th term of the series 1, $1\frac{1}{3}$, $1\frac{2}{3}$, ….

8. Find the 15th term of the series 45, 43, 41, ….

SUGGESTION. — The common difference is -2.

9. Find the 10th term of the series 5, 1, -3, ….

10. Find the 16th term of the series a, $3a$, $5a$, ….

11. Find the 12th term of the series $a-b$, $a+b$, $a+3b$, ….

12. Find the 7th term of the series $x-3y$, $x-2y$, ….

13. A body falls $16\frac{1}{12}$ feet the first second, 3 times as far the second second, 5 times as far the third second, etc. How far will it fall during the 10th second?

360. To find the sum of n terms of a series.

1. Express 5 terms of the series a, $a+d$, $a+2d$, ….

2. How may the term before the last term be obtained from the last term? If l represents the last term and d the common difference, what will be the term next to the last? the second term from the last? the third term from the last?

3. How, then, may the series a, $a+d$, ⋯ be written in reverse order, if the last term is l?

361. Let a represent the first term of an A.P., d the common difference, l the last term, n the number of terms, and s the sum of the terms.

Writing the sum of n terms in the usual order and then in the reverse order, and adding the two equal series,

$$s = a + (a+d) + (a+2d) + (a+3d) + \cdots + l.$$

$$s = l + (l-d) + (l-2d) + (l-3d) + \cdots + a.$$

$$2s = (a+l) + (a+l) + (a+l) + (a+l) + \cdots + (a+l).$$

$$\therefore 2s = n(a+l).$$

$$s = \frac{n}{2}(a+l), \text{ or } n\left(\frac{a+l}{2}\right). \qquad \text{(II)}$$

EXAMPLES

1. What is the sum of 20 terms of the series 2, 5, 8, ⋯ ?

PROCESS

$$l = a + (n-1)\,d = 2 + (20-1) \times 3 = 59$$

$$s = n\left(\frac{a+l}{2}\right) = 20\left(\frac{2+59}{2}\right) = 610$$

EXPLANATION. — Since the last term is not given, it is found by the previous case and substituted for l in the formula for the sum.

2. What is the sum of 16 terms of the series 1, 5, 9, ⋯ ?

3. What is the sum of 10 terms of the series -2, 0, 2, ⋯ ?

4. What is the sum of 6 terms of the series 1, $3\frac{1}{2}$, 6, ⋯ ?

5. What is the sum of 8 terms of the series a, $3\,a$, $5\,a$, ⋯ ?

6. What is the sum of n terms of the series 1, 7, 13, ⋯ ?

7. What is the sum of a terms of the series x, $x + 2\,a$, ⋯ ?

8. What is the sum of 7 terms of the series 4, 11, 18, ⋯ ?

9. What is the sum of 10 terms of the series 1, -1, -3, ⋯ ?

10. What is the sum of 10 terms of the series 1, $\frac{1}{2}$, 0, ⋯ ?

11. How many times does a common clock strike in 12 hours?

12. A body falls $16\frac{1}{12}$ feet the first second, 3 times as far the second second, 5 times as far the third second, etc. How far will it fall in 10 seconds?

13. Thirty flower pots are arranged in a straight line 4 feet apart. How far must a lady walk who, after watering each plant, returns to a well 4 feet from the first plant and in line with the plants, assuming that she starts at the well?

14. A boy took a 30-day job on the following terms: he was to receive 5 cents the first day, 10 cents the second day, 15 cents the third day, etc. How much was he paid for the thirtieth day, and what was the whole amount of his earnings?

362. The two fundamental formulæ,

$$\text{(I)}\ \ l = a + (n-1)d \ \text{ and } \ \text{(II)}\ \ s = \frac{n}{2}(a+l),$$

contain *five elements*, a, d, l, n, and s. Since these formulæ are independent simultaneous equations, if they contain but two unknown elements they may be solved. Hence, if any *three* of the five elements *are known*, the other two may be found.

Examples

1. The last term of an A. P. is 58, the common difference is 3, and the sum of the series is 260. Find the number of terms and the first term.

Solution

Substituting 58 for l, 3 for d, and 260 for s in both (I) and (II),

(I) becomes $$58 = a + (n-1)3. \qquad (1)$$

(II) becomes $$260 = \frac{n}{2}(a+58). \qquad (2)$$

(1) $\times\ n$, $$58\,n = na + 3\,n^2 - 3\,n. \qquad (3)$$

(2) $\times\ 2$, $$520 = na + 58\,n. \qquad (4)$$

(3) $-$ (4), $$58\,n - 520 = 3\,n^2 - 61\,n. \qquad (5)$$

$$3\,n^2 - 119\,n + 520 = 0.$$

$$(n-5)(3\,n-104) = 0.$$

$\therefore\ n = 5$, the number of terms.

Substituting in (1), $a = 46$, the first term.

Since the number of terms must be expressed by a positive integer, fractional or negative values of n are rejected.

2. How many terms are there in the A. P. 2, 5, 8, $\cdots$, if the sum is 610?

Solution

Since a, d, and s are given, and n, but not l, is required, n may be found by eliminating l from (I) and (II) and solving the resulting equation.

From (I) and (II), $\quad l = a + (n-1)d = \dfrac{2\,s - an}{n}.$

Substituting 2 for a, 3 for d, and 610 for s, and solving,

$$n = 20.$$

3. How many terms are there in the series 2, 6, 10, $\cdots$ 66?

4. What is the sum of the series 1, 6, 11, $\cdots$ 61?

5. How many terms are there in the series $-1, 2, 5, \cdots$, if the sum is 221?

6. Determine the series 2, 9, 16, $\cdots$ 86.

7. Determine the series $-10, -8\frac{1}{2}, -7, \cdots$ to 10 terms.

8. The sum of the series $\cdots$ 22, 27, 32, $\cdots$ is 714. If there are 17 terms, what are the first and last terms?

9. If $s = 113\frac{2}{3}$, $a = \frac{1}{3}$, and $d = 2$, find n.

10. What is the sum of the series $-16, -11, -6, \cdots 34$?

11. What is the sum of the series $\cdots -1, 3, 7, \cdots 23$, if the number of terms is 16?

12. What are the extremes of the series $\cdots$ 8, 10, 12, $\cdots$, if $s = 300$, and $n = 20$?

13. How many terms are there in the series 1, 5, 9, $\cdots l$?

14. What is the sum of an A. P. whose extremes are x and y, if the number of terms is b?

363. To insert arithmetical means.

EXAMPLES

1. Insert 5 arithmetical means between 1 and 31.

SOLUTION. — Since there are 5 means, there must be 7 terms. Hence, in $l = a + (n-1)d$, $l = 31$, $a = 1$, $n = 7$, and d is unknown.

Solving, $d = 5$.

Or, since there are 5 means, there must be 6 terms after the first.

Hence, $$d = \frac{31 - 1}{6} = 5.$$

$\therefore$ 1, 6, 11, 16, 21, 26, 31, is the series.

2. Insert 9 arithmetical means between 1 and 6.

3. Insert 10 arithmetical means between 24 and 2.

4. Insert 7 arithmetical means between 10 and -14.

5. Insert 6 arithmetical means between -1 and 2.

6. Insert 14 arithmetical means between 15 and 20.

7. Insert 3 arithmetical means between $a - b$ and $a + b$.

8. Deduce the formula for the common difference when m arithmetical means are to be inserted between a and l. Find the first mean.

9. What is the arithmetical mean between 2 and 6? between 10 and 20? between -3 and 5? between a and b?

364. PRINCIPLE. — *The arithmetical mean between two numbers is equal to half their sum.*

The above principle may be established as follows:

Let a and b represent any two numbers, and A their arithmetical mean.

It is to be proved that $A = \frac{a+b}{2}$.

Since the two numbers and their arithmetical mean form the arithmetical progression a, A, b,

§ 356, $$A - a = b - A,$$

$$2A = a + b.$$

$$\therefore A = \frac{a+b}{2}.$$

EXAMPLES

Find the arithmetical mean between

1. $\frac{2}{3}$ and $\frac{1}{2}$.
2. $a + b$ and $a - b$.
3. $(a + b)^2$ and $(a - b)^2$.
4. $\frac{x+y}{x-y}$ and $\frac{x-y}{x+y}$.
5. $1 - x$ and $\frac{(1-x)^2}{1+x}$.

PROBLEMS

365. Problems in Arithmetical Progression involving two unknown elements commonly suggest series of the form

$$x,\ x + y,\ x + 2y,\ x + 3y,\ \text{etc.}$$

Frequently, however, the solution of problems is more readily accomplished by representing the series as follows:

1. When there are *three* terms, the series may be written

$$x - y,\ x,\ x + y.$$

2. When there are *five* terms, the series may be written,

$$x - 2y,\ x - y,\ x,\ x + y,\ x + 2y.$$

3. When there are *four* terms, the series may be written,

$$x - 3y,\ x - y,\ x + y,\ x + 3y.$$

The sum of the terms of a series represented as above evidently contains but one unknown number.

1. The sum of three numbers in arithmetical progression is 30, and the sum of their squares is 462. What are the numbers?

SOLUTION

Let the series be $x - y,\ x,\ x + y.$

Then, $(x - y) + x + (x + y) = 30,$ (1)

and $(x - y)^2 + x^2 + (x + y)^2 = 462.$ (2)

From (1), $3x = 30.$ (3)

$\therefore$ $x = 10.$ (4)

From (2), $3x^2 + 2y^2 = 462.$ (5)

Substituting 10 for x, $2y^2 = 162.$ (6)

Solving, $y = \pm 9.$

Forming the series from $x = 10$ and $y = \pm 9$, the terms are

1, 10, 19, or 19, 10, 1.

2. The sum of three numbers in arithmetical progression is 18, and their product is 120. What are the numbers?

3. The sum of three numbers in arithmetical progression is 21, and the sum of their squares is 155. What are the numbers?

4. There are three numbers in arithmetical progression the sum of whose squares is 93. If the third is 4 times as large as the first, what are the numbers?

5. The product of the extremes of an arithmetical progression of 3 terms is 4 less than the square of the mean. What are the numbers, if their sum is 24?

6. The sum of four numbers in arithmetical progression is 14, and the product of the means is 12. What are the numbers?

7. The sum of seven numbers in arithmetical progression is 98, and the sum of their squares is 1484. What are the numbers?

8. The sum of five numbers in arithmetical progression is 15, and the product of the extremes is 3 less than the product of the terms next to the extremes. What are the numbers?

9. A number is expressed by three digits in arithmetical progression. If the number is divided by the sum of its digits, the quotient is $20\frac{1}{2}$; and if the number is increased by 594, the result is the number with its digits in the reverse order. What is the number?

10. Find the sum of the odd numbers from 1 to 100.

11. The product of the extremes of an arithmetical progression of 10 terms is 70, and the sum of the series is 95. What are the extremes?

12. Fifty-five logs are to be piled so that the top layer shall consist of 1 log, the next layer of 2 logs, the next layer of 3 logs, etc. How many logs must be placed in the bottom layer?

13. It cost Mr. Smith \$19.00 to have a well dug. If the cost of digging was \$1.50 for the first yard, \$1.75 for the second, \$2.00 for the third, etc., how deep was the well?

14. The product of the extremes of an arithmetical progression of 15 terms is 93, and the sum of the first and last means is 34. What is the progression?

15. How many arithmetical means must be inserted between 5 and 37, so that the ratio of the first mean to the last mean may be $\frac{3}{11}$?

16. How many arithmetical means must be inserted between 4 and 25, so that the sum of the series may be 116?

17. Prove that the equimultiples of the terms of an arithmetical progression are in arithmetical progression.

18. Prove that the difference of the squares of consecutive integers are in arithmetical progression, and that the common difference is 2.

19. Prove that the sum of n consecutive odd integers, beginning with 1, is n^2.

GEOMETRICAL PROGRESSION

366. A series of numbers each of which after the first is derived by multiplying the preceding number by some constant multiplier is called a **Geometrical Series,** or a **Geometrical Progression.**

2, 4, 8, 16, 32 and a^4, a^3, a^2, a are geometrical progressions.

In the first series the constant multiplier is 2; in the second it is $\frac{1}{a}$.

G. P. is an abbreviation of the words *Geometrical Progression.*

367. The constant multiplier is called the **Ratio.**

It is evident that the terms of a geometrical progression increase or decrease numerically according as the ratio is numerically greater or less than 1.

368. To find the *n*th, or last term.

1. In the geometrical progression 3, 6, 12, 24, what is the ratio of 6 to 3? of 12 to 6? of 24 to 12?

2. In the geometrical progression a, ar, ar^2, ar^3, $\cdots$ what is the ratio? How many times does the ratio enter as a factor into the second term? into the third term? into the fourth term?

369. When a represents the first term of a G. P., r the ratio, and l the last or nth term,

$$l = ar^{n-1}. \qquad \text{(I)}$$

Examples

1. Find the 9th term of the series 1, 3, 9, $\cdots$.

PROCESS

$l = ar^{n-1}$

$l = 1 \times 3^8$

$l = 6561$

Explanation. — In this example $a = 1$, $r = 3$, and $n = 9$.

Substituting these values in the formula for l, the last term is 6561.

2. Find the 10th term of the series 1, 2, 4, $\cdots$.

3. Find the 8th term of the series $\frac{1}{4}$, $\frac{1}{2}$, 1, $\cdots$.

4. Find the 9th term of the series 6, 12, 24, $\cdots$.

5. Find the 11th term of the series $\frac{1}{2}$, 1, 2, ···.

6. Find the 7th term of the series 2, 6, 18, ···.

7. Find the 6th term of the series 4, 20, 100, ···.

8. Find the 6th term of the series 6, 18, 54, ···.

9. Find the 10th term of the series 1, $\frac{1}{2}$, $\frac{1}{4}$, ···.

10. Find the 10th term of the series 1, $\frac{2}{3}$, $\frac{4}{9}$, ···.

11. Find the 8th term of the series $\frac{1}{2}$, $\frac{1}{3}$, $\frac{2}{9}$, ···.

12. Find the 11th term of the series $a^{19}b$, $a^{18}b^2$, ···.

13. Find the nth term of the series 2, $\sqrt{2}$, 1, ···.

14. A man worked for 25 cents the first day, 50 cents the second day, \$1 the third day, and so on for 10 days. How much did he receive the tenth day?

15. If a man begins business with a capital of \$200 and doubles it every year for 6 years, how much will he have at the end of the sixth year?

16. If the population of the United States is 76 millions in 1900 and doubles itself every 25 years, what will it be in the year 2000?

17. A man's salary was raised $\frac{1}{4}$ every year for 5 years. If his salary was \$512 the first year, what was it the sixth year?

18. The population of a city at a certain time was 20,736, and increased in geometrical progression 25% each decade. What was the population at the end of 40 years?

19. A man who wanted 10 bushels of wheat thought \$1 a bushel too high a price. But he agreed to pay 2 cents for the first bushel, 6 cents for the second, 18 cents for the third, and so on. What did the last bushel cost him?

20. From a grain of corn there grew a stalk that produced an ear of 150 grains. These grains were planted, and each produced an ear of 150 grains. This process was repeated until there were 4 harvestings. If 75 ears of corn make 1 bushel, how many bushels were there the fourth year?

370. To find the sum of a finite series.

Let a represent the first term, l the nth term, or the last term, r the ratio, n the number of terms, and s the sum of the terms.

Then, $$s = a + ar + ar^2 + ar^3 + \cdots + ar^{n-1}. \quad (1)$$

(1) $\times r$, $$rs = ar + ar^2 + ar^3 + \cdots + ar^{n-1} + ar^n. \quad (2)$$

(2) $-$ (1), $$s(r-1) = ar^n - a.$$

$$s = \frac{ar^n - a}{r-1}, \text{ or } \frac{a(r^n-1)}{r-1}. \quad \text{(II)}$$

But, since $ar^{n-1} = l$, $ar^n = rl$.

Substituting rl for ar^n in (II),

$$s = \frac{rl - a}{r-1}, \text{ or } \frac{a - rl}{1-r}. \quad \text{(III)}$$

EXAMPLES

1. Find the sum of 6 terms of the series 3, 9, 27, ….

PROCESS

$$s = \frac{ar^n - a}{r-1}$$

$$s = \frac{3 \times 3^6 - 3}{3-1} = 1092$$

EXPLANATION. — Since the first term a, the ratio r, and the number of terms n, are given, and formula II gives the sum in terms of a, r, and n, formula II is used.

2. Find the sum of 8 terms of the series 1, 2, 4, ….
3. Find the sum of 8 terms of the series 1, $\frac{1}{2}$, $\frac{1}{4}$, ….
4. Find the sum of 10 terms of the series 1, $1\frac{1}{2}$, $2\frac{1}{4}$, ….
5. Find the sum of 7 terms of the series 2, $-\frac{2}{3}$, $\frac{2}{9}$, ….
6. Find the sum of 12 terms of the series $-\frac{1}{2}$, $\frac{1}{4}$, $-\frac{1}{8}$, ….
7. Find the sum of 7 terms of the series 1, $2x$, $4x^2$, ….
8. Find the sum of 7 terms of the series 1, $-2x$, $4x^2$, ….
9. Find the sum of n terms of the series 1, x^2, x^4, ….
10. Find the sum of n terms of the series 1, 2, 4, ….

11. Find the sum of n terms of the series $1, \frac{1}{3}, \frac{1}{9}, \cdots$.

12. The extremes of a geometrical series are 1 and 729, and the ratio is 3. What is the sum of the series?

13. What is the sum of the series $3, 6, 12, \cdots, 192$?

14. What is the sum of the series $7, -14, 28, \cdots, -224$?

371. To find the sum of an infinite geometrical series.

If the ratio r is numerically less than 1, it is evident that the successive terms of a geometrical series become numerically less and less. Hence, in an infinite decreasing geometrical series, the nth term l, or ar^{n-1}, can be made less than any assignable number, though not absolutely equal to zero.

(III) may be written $s = \frac{a}{1-r} - \frac{rl}{1-r}$.

Since, by taking enough terms, l and consequently rl can be made less than any assignable number, the second fraction may be neglected.

Hence, the formula for the sum of an infinite decreasing geometrical series is

$$s = \frac{a}{1-r}.$$

EXAMPLES

1. Find the sum of the series $1, \frac{1}{10}, \frac{1}{100}, \cdots$.

SOLUTION

Substituting 1 for a and $\frac{1}{10}$ for r in (IV),

$$s = \frac{1}{1-\frac{1}{10}} = \frac{1}{\frac{9}{10}} = \frac{10}{9}.$$

2. Find the value of $.185185185\cdots$.

SOLUTION

Since $.185185185\cdots = .185 + .000185 + .000000185 + \cdots$, $a = .185$ and $r = .001$.

Substituting in (IV), $.185185185\cdots = s = \frac{.185}{1-.001} = \frac{5}{27}$.

Find the value of

3. $1 + \frac{1}{2} + \frac{1}{4} + \cdots$.
4. $3 + \frac{3}{4} + \frac{3}{16} + \cdots$.
5. $1 - \frac{1}{3} + \frac{1}{9} - \cdots$.
6. $.407407 \cdots$.
7. $.363636 \cdots$.
8. $1.94444 \cdots$.

372. To insert geometrical means between two terms.

EXAMPLES

1. Insert 3 geometrical means between 2 and 162.

PROCESS

$l = ar^{n-1}$

$162 = 2r^4$

$r = \pm 3$

EXPLANATION. — Since there are three means, there are five terms, and $n - 1 = 4$. Solving for r and neglecting imaginary values, $r = \pm 3$.

Therefore, the series is either 2, 6, 18, 54, 162, or 2, −6, 18, −54, 162.

2. Insert 3 geometrical means between 1 and 625.
3. Insert 5 geometrical means between $4\frac{1}{2}$ and $\frac{2048}{81}$.
4. Insert 4 geometrical means between $\frac{343}{16}$ and $\frac{64}{49}$.
5. Insert 4 geometrical means between 5120 and 5.
6. Insert 4 geometrical means between $4\sqrt{2}$ and 1.
7. Insert 5 geometrical means between a^6 and b^6.
8. Insert 6 geometrical means between -2 and $\frac{1}{8}\sqrt{2}$.
9. Insert 4 geometrical means between x and $-y$.

373. PRINCIPLE. — *The geometrical mean between two numbers is equal to the square root of their product.*

The above principle may be established as follows:

Let a and b represent any two numbers, and G their geometrical mean.

It is to be proved that $G = \sqrt{ab}$.

Since the two numbers and their geometrical mean form the geometrical progression a, G, b,

§ 366,

$$\frac{G}{a} = \frac{b}{G},$$

$$G^2 = ab.$$

$$\therefore G = \sqrt{ab}.$$

Find the geometrical mean between

1. 8 and 50.
2. $\frac{1}{2}$ and $3\frac{5}{9}$.
3. $1\frac{1}{16}$ and $\frac{3}{4}$.
4. $(a+b)^2$ and $(a-b)^2$.
5. $\frac{a^2+ab}{a^2-ab}$ and $\frac{ab+b^2}{ab-b^2}$.
6. $25x^2-10x+1$ and $x^2+10x+25$.

374. Since formulæ I and II, or III, which is equivalent to II, are two independent simultaneous equations containing five elements, if *three* elements *are known*, the other *two* may be found by elimination.

Problems

375. 1. Given r, l, and s, to find a.

2. The ratio of a geometrical progression is 5, the last term is 625, and the sum is 775. What is the first term?

3. The ratio of a geometrical progression is $\frac{1}{10}$, the sum is $\frac{1}{3}$, and the series is infinite. What is the first term?

4. Find l in terms of a, r, and s.

5. Find the last term of the series 5, 10, 20, ···, the sum of whose terms is 155.

6. If $\frac{1}{8}+\frac{1}{8}\sqrt{2}+\frac{1}{4}+\cdots=1\frac{7}{8}(1+\sqrt{2})$, what is the last term, and the number of terms?

7. Deduce the formula for r in terms of a, l, and s.

8. If the sum of the geometrical progression $32 \cdots 243$ is 665, what is the ratio? Write the series.

9. The sum of a geometrical progression is 700 greater than the first term and 525 greater than the last term. What is the ratio? If the first term is 81, what is the progression?

10. Deduce the formula for r in terms of a, n, and l.

11. The first term of a geometrical progression is 3, the last term is 729, and the number of terms is 6. What is the ratio? Write the series.

12. Find l in terms of r, n, and s.

13. The sum of the 12 terms of a geometrical progression whose ratio is 2 is 4095. What is the 12th term?

14. The velocity of a sled at the bottom of a hill is 100 feet per second. How far will it go on the level, if its velocity decreases each second $\frac{1}{5}$ of that of the previous second?

15. From a cask of vinegar $\frac{1}{3}$ was drawn off and the cask was filled by pouring in water. Show that if this is done 6 times, the contents of the cask will be more than $\frac{9}{10}$ water.

16. A ball thrown vertically into the air 100 feet falls and rebounds 40 feet the first time, 16 feet the second time, and so on. What is the whole distance through which the ball will have passed when it finally comes to rest?

17. Show that the amount of \$1 for 1, 2, 3, 4, 5 years at compound interest varies in geometrical progression.

18. Show that equimultiples of numbers in geometrical progression are also in geometrical progression.

19. The sum of three numbers in geometrical progression is 19, and the sum of their squares is 133. What are the numbers?

SUGGESTION. — When there are but three terms in the series they may be represented by x^2, xy, y^2, or by x, $\sqrt{xy}$, y.

20. The product of three numbers in geometrical progression is 8, and the sum of their squares is 21. What are the three numbers?

21. If 4 is a geometrical mean between two numbers whose sum is 10, what are the numbers?

22. The product of three numbers in geometrical progression is 64, and the sum of their cubes is 584. What are the numbers?

23. The sum of the first and second of four numbers in geometrical progression is 15, and the sum of the third and fourth is 60. What are the numbers?

SUGGESTION. — Four unknown numbers in geometrical progression may be represented by $\frac{x^2}{y}$, x, y, $\frac{y^2}{x}$.

24. The sum of the first and third of three numbers in geometrical progression is 130, and their product is 625. What are the numbers?

25. Divide \$700 among three persons so that the first shall receive \$300 more than the third, and the share of the second shall be a geometrical mean between the shares of the first and third.

26. If a, b, and c are in geometrical progression, show that their reciprocals also are in geometrical progression.

27. The difference between two numbers is 24, and their arithmetical mean exceeds their geometrical mean by 6. What are the numbers?

HARMONICAL PROGRESSION

376. 1. Examine the series $1, \frac{1}{2}, \frac{1}{3}, \frac{1}{4}, \cdots$. Has it a constant difference? Has it a constant ratio?

2. Take the reciprocal of each term. What kind of a series is thus formed? How, then, may the series $1, \frac{1}{2}, \frac{1}{3}, \frac{1}{4}, \cdots$, be described?

377. A series the reciprocals of whose terms form an arithmetical progression is called a **Harmonical Series,** or a **Harmonical Progression.**

$3, \frac{3}{2}, 1, \frac{3}{4}, \frac{3}{5}, \frac{1}{2}, \cdots$ is a harmonical progression, because $\frac{1}{3}, \frac{2}{3}, 1, \frac{4}{3}, \frac{5}{3}, 2, \cdots$ the reciprocals of its terms form an arithmetical progression.

H. P. is an abbreviation for the words *Harmonical Progression.*

378. Problems in harmonical progression are commonly solved by taking the reciprocals of the terms and employing the principles of arithmetical progression. There is no general method, however, for finding the sum of the terms of a harmonical progression.

379. Principle 1. — *The harmonical mean between two numbers is equal to twice their product divided by their sum.*

The above principle may be established as follows:

Let H represent the harmonical mean between a and b.

It is to be proved that $H = \frac{2ab}{a+b}$.

§ 377, $\frac{1}{a}, \frac{1}{H}, \frac{1}{b}$ are in arithmetical progression.

Hence, § 356, $\frac{1}{b} - \frac{1}{H} = \frac{1}{H} - \frac{1}{a}.$

Clearing of fractions, $aH - ab = ab - bH.$

Transposing, $aH + bH = 2ab.$

$$\therefore H = \frac{2ab}{a+b}.$$

380. PRINCIPLE 2. — *The geometrical mean between two numbers is also the geometrical mean between their arithmetical and harmonical means.*

The above principle may be established as follows:

§ 364, $$A = \frac{a+b}{2}. \tag{1}$$

§ 373, $$G = \sqrt{ab}. \tag{2}$$

§ 379, $$H = \frac{2ab}{a+b}. \tag{3}$$

Multiplying (1) by (3), $$AH = ab. \tag{4}$$

Taking the square root, $$\sqrt{AH} = \sqrt{ab}. \tag{5}$$

From (2) and (5), Ax. 1, $$G = \sqrt{AH}.$$

Hence, § 373, G is the geometrical mean between A and H.

EXAMPLES

1. Find the 12th term of the H. P. 6, 3, 2, ···.

SOLUTION. — The reciprocals of the terms form the arithmetical progression

$$\tfrac{1}{6},\ \tfrac{1}{3},\ \tfrac{1}{2},\ \cdots$$

in which $a = \frac{1}{6}$ and $d = \frac{1}{6}$.

Substituting $\frac{1}{6}$ for a, $\frac{1}{6}$ for d, and 12 for n in (I),

§ 359, $$l = \tfrac{1}{6} + (12 - 1)\tfrac{1}{6} = 2.$$

Therefore, § 377, the 12th term of the given harmonical progression is $\frac{1}{2}$.

2. Find the 10th term of the harmonical series $\frac{1}{2}, \frac{1}{4}, \frac{1}{6}, \cdots$.

3. Insert 6 harmonical means between $1\frac{1}{2}$ and 12.

4. Insert 2 harmonical means between 2 and 5.

5. Insert 7 harmonical means between $12\frac{1}{2}$ and $2\frac{1}{2}$.

6. Insert 3 harmonical means between b and a.

7. Find the nth term of the H. P. $\frac{1}{5}, \frac{1}{8}, \frac{1}{11}, \cdots$.

8. The 3d and 4th terms of a H. P. are $2\frac{1}{2}$ and $1\frac{7}{8}$. Write the first 6 terms.

Find the harmonical mean between

9. 2 and 3.

10. $\frac{1}{2}$ and $\frac{1}{3}$.

11. $2\frac{1}{2}$ and $1\frac{1}{4}$.

12. $2\frac{1}{2}$ and 10.

13. $a - c$ and $a + c$.

14. $1 - \sqrt{a}$ and $1 + \sqrt{a}$.

15. a and $\frac{1}{a}$.

16. $\sqrt{6}$ and $\sqrt{3}$.

17. The 5th term of a harmonical progression is $\frac{1}{12}$, and the 11th term is $\frac{1}{24}$. What is the first term?

18. The arithmetical mean between two numbers is 5, and their harmonical mean is $3\frac{1}{3}$. What are the numbers?

19. If one number exceeds another by 2, and their arithmetical mean exceeds their harmonical mean by $\frac{1}{3}$, what are the numbers?

20. If a, b, and c are in harmonical progression, prove that $a - b : b - c = a : c$.

21. If a, b, c, and d are in harmonical progression, prove that $ab : cd = b - a : d - c$.

22. If b is the harmonical mean between a and c, prove that

$$\frac{1}{b-a} + \frac{1}{b-c} = \frac{1}{a} + \frac{1}{c}.$$

23. When $b - a : c - b = a : x$, prove that $x = a$, if a, b, and c are in arithmetical progression; that $x = b$, if a, b, and c are in geometrical progression; and that $x = c$, if a, b, and c are in harmonical progression.

24. The harmonical mean between two numbers is $5\frac{7}{13}$ and their arithmetical mean is $6\frac{1}{2}$. What is their geometrical mean?

25. Prove that $x + xy$, $2xy$, and $xy + xy^2$ are in harmonical progression.

26. If $b + c$, $c + a$, and $a + b$ are in harmonical progression, prove that a^2, b^2, c^2 are in arithmetical progression.

IMAGINARY AND COMPLEX NUMBERS

381. 1. If from $\sqrt{-25}$ the rational factor $\sqrt{25}$ is removed, what irrational factor remains?

2. Simplify $\sqrt{-25}$, $\sqrt{-16}$, $\sqrt{-a^2}$. What common part, or *unit*, have the indicated square roots of negative numbers?

3. What is the square of $\sqrt{4}$? of $\sqrt{5}$? of $\sqrt{9}$? of $\sqrt{2x}$?

What is the effect of squaring a radical of the second degree? What, then, is the square of $\sqrt{-4}$? of $\sqrt{-a}$? of $\sqrt{-1}$?

382. Up to this point the only numbers whose nature has been discussed have been numbers that differ from arithmetical numbers in having a sign, + or −, to indicate quality or direction. These numbers are called real numbers, and may be briefly described as *numbers whose squares are positive.*

There are numbers, however, *whose squares are negative.* They constitute one class of imaginary numbers, defined in § 257. In this chapter only imaginary numbers of the second degree are treated.

Let $-a$ be any negative real number.

Then, $\sqrt{-a}$ will represent an imaginary number.

Since $\quad +\sqrt{-a} = +\sqrt{a} \cdot \sqrt{-1} = +\sqrt{-1} \cdot \sqrt{a}$

and $\quad -\sqrt{-a} = -\sqrt{a} \cdot \sqrt{-1} = -\sqrt{-1} \cdot \sqrt{a},$

the positive imaginary unit is $+\sqrt{-1}$, and the negative imaginary unit is $-\sqrt{-1}$.

Since the square of the square root of a number is the number itself,

$$(\sqrt{-1})^2 = -1.$$

This relation is sufficient to explain operations with imaginary numbers.

383. Relation between the units $+1$, -1, $\sqrt{-1}$, and $-\sqrt{-1}$.

In the accompanying figure the *length* of any radius of the circle represents the arithmetical unit 1. The line drawn from O to A, called the line OA, represents the positive unit $+1$, and the line OA'' represents the negative unit -1. Every real number lies somewhere on the line $X'X$, which is supposed to extend indefinitely in both directions from O. $X'X$ is called the axis of real numbers.

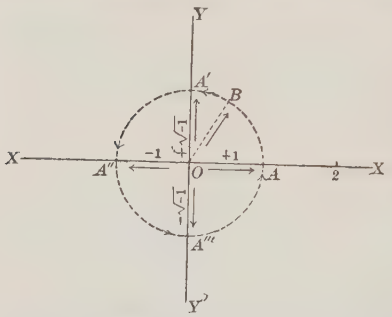

The *direction* of any line drawn from O, as OB, that is, the quality or *direction sign* of the number represented by that line, is determined with reference to the fixed line OA by finding what part of a revolution is required to swing the line from the position OA to the required position. By common consent revolution of the line OA is performed in a direction opposite to that of the hands of a clock, as shown by the arrows. OB is reached after $\frac{1}{8}$ of a revolution, OA' after $\frac{1}{4}$ of a revolution, OA'' after $\frac{1}{2}$ of a revolution, etc.

Since OA'', or -1, represents $\frac{1}{2}$ of a revolution of OA, the square of OA'', or $(-1)^2$, represents 1 revolution of OA, which produces OA, or $+1$. Hence, OA'', or -1, represents the square root of $+1$, or $(+1)^{\frac{1}{2}}$.

Similarly, since OA' represents $\frac{1}{2}$ of $\frac{1}{2}$ of a revolution of OA, and OA'' represents $\frac{1}{2}$ of a revolution of OA, OA' represents the square root of OA'', or of -1; that is, $OA' = \sqrt{-1}$.

If OA'' is swung $\frac{1}{4}$ of a revolution from the position OA'' to the position OA''', OA'' will be multiplied by $\sqrt{-1}$ just as OA is multiplied by $\sqrt{-1}$ to produce OA'. Hence, the result $OA''' = -1 \cdot \sqrt{-1} = -\sqrt{-1}$.

$+1$, represented by OA, and -1, represented by OA'', are the units for real numbers, that is, are *real units*. Just as the real number $+a$ is represented by a line a units long extending from O toward X, and the real number $-a$ by a line a units long extending from O in the opposite direction, so the imaginary number $+a\sqrt{-1}$, or $(+\sqrt{-1}) \times a$, is represented by a line a units long extending from O toward Y, and the imaginary number $-a\sqrt{-1}$, or $(-\sqrt{-1}) \times a$, by a line a units long extending from O in the opposite direction, toward Y'. Hence, $+\sqrt{-1}$ and $-\sqrt{-1}$ are the units for imaginary numbers, that is, they are *imaginary units*; $+a\sqrt{-1}$ is called a *positive imaginary* number and $-a\sqrt{-1}$ a *negative imaginary* number.

$Y'Y$ is called the axis of imaginary numbers. If $Y'Y$ is taken as the axis of real numbers, then $X'X$ becomes the axis of imaginary numbers. Hence, it is seen that imaginary numbers have as much reality as real numbers. Imaginary numbers were named before their nature was understood.

384. In the graphical illustration of the relation between real and imaginary numbers it was assumed that $+1 \cdot \sqrt{-1} = \sqrt{-1}$, or $\sqrt{-1} \cdot 1$; that is, the Commutative Law for multiplication was assumed to apply when imaginary numbers were involved. It is evident, if the discussion of number is to proceed, that in any operation imaginary numbers must obey all the laws of real numbers except those which determine the quality of the result; and that the quality of the result is determined, as far as the imaginary numbers are concerned, by the relation $(\sqrt{-1})^2 = -1$.

385. Powers of $\sqrt{-1}$.

$$(\sqrt{-1}) = +\sqrt{-1};$$

$$(\sqrt{-1})^2 = -1;$$

$$(\sqrt{-1})^3 = (\sqrt{-1})^2\,\sqrt{-1} = (-1)\sqrt{-1} = -\sqrt{-1};$$

$$(\sqrt{-1})^4 = (\sqrt{-1})^2(\sqrt{-1})^2 = (-1)(-1) = +1;$$

$$(\sqrt{-1})^5 = (\sqrt{-1})^4\,\sqrt{-1} = (+1)\sqrt{-1} = +\sqrt{-1};$$

and so on. Hence, if $n = 0$ or a positive integer,

$$(\sqrt{-1})^{4n+1} = +\sqrt{-1}; \quad (\sqrt{-1})^{4n+2} = -1;$$

$$(\sqrt{-1})^{4n+3} = -\sqrt{-1}; \quad (\sqrt{-1})^{4n+4} = +1.$$

Hence, *any even power of* $\sqrt{-1}$ *is real and any odd power is imaginary.*

386. Operations involving imaginary numbers.

EXAMPLES

Find the value of

1. $(\sqrt{-1})^6$.
2. $(\sqrt{-1})^7$.
3. $(\sqrt{-1})^{10}$.
4. $(\sqrt{-1})^{21}$.
5. $(\sqrt{-1})^{18}$.
6. $(\sqrt{-1})^{15}$.
7. $(-\sqrt{-1})^3$.
8. $(-\sqrt{-1})^8$.
9. Add $\sqrt{-a^4}$ and $\sqrt{-16\,a^4}$.

SOLUTION

$$\sqrt{-a^4} + \sqrt{-16\,a^4} = a^2\sqrt{-1} + 4\,a^2\sqrt{-1} = 5\,a^2\sqrt{-1}.$$

Simplify the following:

10. $\sqrt{-4}+\sqrt{-49}$.
11. $\sqrt{-9}+\sqrt{-64}$.
12. $2\sqrt{-4}+3\sqrt{-1}$.
13. $\sqrt{-12}+4\sqrt{-3}$.
14. $5\sqrt{-18}-\sqrt{-72}$.
15. $3\sqrt{-20}-\sqrt{-80}$.
16. $(\sqrt{-a}+3\sqrt{-b})+(\sqrt{-a}-3\sqrt{-b})$.
17. $(\sqrt{-9xy}-\sqrt{-xy})-(\sqrt{-4xy}+\sqrt{-xy})$.
18. $\sqrt{-x^2}+\sqrt{-4x^2}-\sqrt{-x^3}+3x\sqrt{-x}$.
19. $\sqrt{-16}-3\sqrt{-4}+\sqrt{-18}+\sqrt{-50}+\sqrt{-25}$.
20. $\sqrt{-8}+a\sqrt{-2}-\sqrt{-98}-5\sqrt{-2a^2}$.
21. $\sqrt{-16a^2x^2}+\sqrt{-a^2x^2}-\sqrt{-9a^2x^2}$.
22. $\sqrt{1-5}-3\sqrt{1-10}+2\sqrt{5-30}$.

23. Multiply $3\sqrt{-10}$ by $2\sqrt{-8}$.

PROCESS

$$\begin{aligned}3\sqrt{-10}\times 2\sqrt{-8} &= 3\sqrt{10}\sqrt{-1}\times 2\sqrt{8}\sqrt{-1}\\ &= 6\sqrt{10}\times\sqrt{8}\times(-1)\\ &= -6\sqrt{80}=-24\sqrt{5}.\end{aligned}$$

EXPLANATION. — In order to determine the sign of the product, each imaginary number is reduced to the form $b\sqrt{-1}$. The numbers are then multiplied together as ordinary radicals, observing, however, that $\sqrt{-1}\times\sqrt{-1}=-1$.

24. Multiply $\sqrt{-2}+3\sqrt{-3}$ by $4\sqrt{-2}-\sqrt{-3}$.

FIRST SOLUTION

$$\begin{aligned}&\sqrt{-2}+3\sqrt{-3}=(\sqrt{2}+3\sqrt{3})\sqrt{-1}\\ &\underline{4\sqrt{-2}-\sqrt{-3}=(4\sqrt{2}-\sqrt{3})\sqrt{-1}}\\ &(\sqrt{2}+3\sqrt{3})(4\sqrt{2}-\sqrt{3})(-1)\\ &=(8+12\sqrt{6}-\sqrt{6}-9)(-1)\\ &=1-11\sqrt{6}\end{aligned}$$

SECOND SOLUTION

$$\begin{array}{r}\sqrt{-2}+3\sqrt{-3}\\ \underline{4\sqrt{-2}-\sqrt{-3}}\\ -4\sqrt{4}-12\sqrt{6}\\ +3\sqrt{9}+\sqrt{6}\\ \hline 1-11\sqrt{6}\end{array}$$

Multiply:

25. $3\sqrt{-5}$ by $2\sqrt{-15}$.
26. $4\sqrt{-27}$ by $\sqrt{-12}$.
27. $2\sqrt{-8}$ by $5\sqrt{-3}$.
28. $8\sqrt{-1}$ by $\sqrt{-b^3}$.
29. $\sqrt{-125}$ by $\sqrt{-108}$.
30. $\sqrt{-100}$ by $\sqrt{-30}$.

31. $\sqrt{-6}+\sqrt{-3}$ by $\sqrt{-6}-\sqrt{-3}$.

32. $\sqrt{-ab}+\sqrt{-a}$ by $\sqrt{-ab}-\sqrt{-a}$.

33. $\sqrt{-xy}+\sqrt{-x}$ by $\sqrt{-xy}+\sqrt{-x}$.

34. $\sqrt{-50}-\sqrt{-12}$ by $\sqrt{-8}-\sqrt{-75}$.

35. $\sqrt{-a}+\sqrt{-b}+\sqrt{-c}$ by $\sqrt{-a}+\sqrt{-b}-\sqrt{-c}$.

36. Divide $\sqrt{-12}$ by $\sqrt{-3}$.

SOLUTION

$$\frac{\sqrt{-12}}{\sqrt{-3}}=\frac{\sqrt{12}\sqrt{-1}}{\sqrt{3}\sqrt{-1}}=\frac{\sqrt{12}}{\sqrt{3}}=\sqrt{4}=2.$$

37. Divide $\sqrt{12}$ by $\sqrt{-3}$.

SOLUTION

$$\frac{\sqrt{12}}{\sqrt{-3}}=\frac{\sqrt{12}}{\sqrt{3}\sqrt{-1}}=\frac{\sqrt{4}}{\sqrt{-1}}=\frac{2}{\sqrt{-1}}$$
$$=\frac{2\sqrt{-1}}{-1}=-2\sqrt{-1}.$$

38. Divide 5 by $(\sqrt{-1})^3$.

SOLUTION

$$\frac{5}{(\sqrt{-1})^3}=\frac{5(+1)}{(\sqrt{-1})^3}=\frac{5(\sqrt{-1})^4}{(\sqrt{-1})^3}=5\sqrt{-1}.$$

Divide:

39. $\sqrt{-18}$ by $\sqrt{-3}$.

40. $\sqrt{27}$ by $\sqrt{-3}$.

41. $14\sqrt{-5}$ by $2\sqrt{-7}$.

42. $-\sqrt{-a^2}$ by $\sqrt{-b^2}$.

43. 1 by $\sqrt{-1}$.

44. $(\sqrt{-1})^4-\sqrt{-1}$ by $\sqrt{-1}$.

45. $\sqrt{-3}+(\sqrt{-1})^2$ by $\sqrt{-1}$.

46. $\sqrt{8}+3\sqrt{14}$ by $\sqrt{-2}$.

47. $\sqrt{12}+\sqrt{3}$ by $\sqrt{-3}$.

48. -2 by $\sqrt{-1}$.

49. $(\sqrt{-1})^5$ by $\frac{1}{3}\sqrt{-1}$.

50. $(\sqrt{-1})^3$ by $(\sqrt{-1})^{15}$.

51. $\sqrt{4ab}$ by $\sqrt{-bc}$.

52. $\sqrt{-20}-\sqrt{-2}$ by $2\sqrt{-1}$.

53. $\sqrt{-16}-\sqrt{-6}$ by $2\sqrt{-2}$

54. $(\sqrt{-1})^{14}$ by $-\frac{1}{2}\sqrt{-1}$.

55. $(\sqrt{-1})^{10}$ by $(\sqrt{-1})^{-2}$.

56. $\sqrt{-a^2}+b\sqrt{-1}$ by $\sqrt{-ab}$

57. $\sqrt{-4}$ by $\sqrt{-2}\cdot\sqrt{-2}\cdot\sqrt{-1}$.

387. For brevity $\sqrt{-1}$ is often written i.

Including all intermediate fractional and incommensurable values, the scale of real numbers may be written

$$\cdots -3 \cdots -2 \cdots -1 \cdots 0 \cdots +1 \cdots +2 \cdots +3 \cdots \qquad (1)$$

and the scale of imaginary numbers, composed of real multiples of $+i$ and $-i$, may be written

$$\cdots -3i \cdots -2i \cdots -i \cdots 0 \cdots +i \cdots +2i \cdots +3i \cdots \qquad (2)$$

Since the square of every real number except 0 is positive and the square of every imaginary number except $0\,i$, or 0, is negative, the scales (1) and (2) have no number in common except 0. Hence,

An imaginary number cannot be equal to a real number nor cancel any part of a real number.

388. The algebraic sum of a real number and an imaginary number is called a **Complex Number.**

$2 + 3\sqrt{-1}$, or $2 + 3i$, and $a + b\sqrt{-1}$, or $a + bi$, are complex numbers. $a^2 + 2ab\sqrt{-1} - b^2$ is a complex number, since $a^2 + 2ab\sqrt{-1} - b^2 = (a^2 - b^2) + 2ab\sqrt{-1}$.

389. Two complex numbers that differ only in the signs of their imaginary terms are called **Conjugate Complex Numbers.**

$a + b\sqrt{-1}$ and $a - b\sqrt{-1}$, or $a + bi$ and $a - bi$, are conjugate complex numbers.

390. *The sum and product of two conjugate complex numbers are both real.*

Let $a + b\sqrt{-1}$ and $a - b\sqrt{-1}$ be conjugate complex numbers.

Their sum is $2a$.

Since $(\sqrt{-1})^2 = -1$, their product is,

§ 97, $$a^2 - (b\sqrt{-1})^2 = a^2 - (-b^2)$$
$$= a^2 + b^2.$$

391. *If two complex numbers are equal, their real parts are equal and also their imaginary parts.*

Let $$a + b\sqrt{-1} = x + y\sqrt{-1}.$$

Then, $$a - x = (y - b)\sqrt{-1},$$

which, § 387, is impossible unless $a = x$ and $y = b$.

392. *If* $a + b\sqrt{-1} = 0$, *a and b being real, then* $a = 0$ *and* $b = 0$.

For, squaring, $a^2 + 2ab\sqrt{-1} - b^2 = 0$,

$$a^2 - b^2 = -2ab\sqrt{-1},$$

which, § 387, is true only when $a = 0$ and $b = 0$.

393. Graphical representation of a complex number.

The sum of 3 positive real units and 2 positive imaginary units is found by counting 3 units along OX in the positive direction from O and from that point, D, measuring 2 units upward at right angles to OX in the direction of the axis of imaginary numbers. The line OP represents, by its *length* and *direction*, the combined effect or sum of the directed lines OD and DP, that is, the complex number $3 + 2i$.

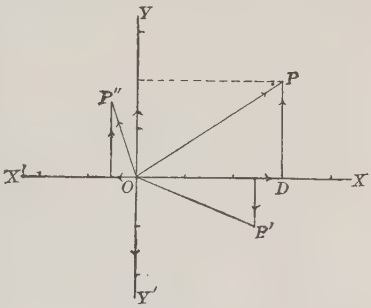

The same result may be obtained by counting 2 units along OY upward from O and from the end of the second division measuring 3 units toward the right at right angles to OY in the direction of the axis of real numbers. Hence, the line OP represents either $3 + 2i$ or $2i + 3$.

Similarly, the line OP' represents by its length and direction $2\frac{1}{2} - i$ or $-i + 2\frac{1}{2}$, and the line OP'' represents $-\frac{1}{2} + \frac{3}{2}i$ or $\frac{3}{2}i - \frac{1}{2}$.

Represent the following numbers graphically:

1. $3 + 4i$.
2. $2 - 3i$.
3. $5 + 2i$.
4. $5 - 2i$.
5. $i - 2$.
6. $4i - 1$.

394. Relation of complex numbers to real and imaginary numbers.

Let a and b represent any real numbers.

In the figure of § 393 let P represent any point a units distant from $Y'Y$ and b units distant from $X'X$.

Then OP, or the complex number $a + b\sqrt{-1}$, represents *any number whatever.*

If P lies on the axis of real numbers, $b = 0$ and the complex number $a + b\sqrt{-1} = a$, a real number.

If P lies on the axis of imaginary numbers, $a = 0$ and the complex number $a + b\sqrt{-1} = b\sqrt{-1}$, an imaginary number.

If P lies in both axes, $a = 0$ and $b = 0$, and the complex number $a + b\sqrt{-1} = 0$.

395. Operations involving complex numbers.

EXAMPLES

1. Add $3 - 2\sqrt{-1}$ and $2 + 5\sqrt{-1}$.

SOLUTION

$$3 - 2\sqrt{-1} + 2 + 5\sqrt{-1} = (3 + 2) + (-2\sqrt{-1} + 5\sqrt{-1})$$
$$= 5 + 3\sqrt{-1}.$$

EXPLANATION. — Since, § 387, the imaginary terms cannot unite with the real terms, the simplest form of the sum is obtained by uniting the real and the imaginary terms separately and indicating the algebraic sum of the results.

Simplify the following:

2. $(5 + \sqrt{-4}) + (\sqrt{-9} - 3)$.

3. $(2 - \sqrt{-16}) + (3 + \sqrt{-4})$.

4. $(3 - \sqrt{-8}) + (4 + \sqrt{-18})$.

5. $(\sqrt{-20} - \sqrt{16}) + (\sqrt{-45} + \sqrt{4})$.

6. $(4 + \sqrt{-25}) - (2 + \sqrt{-4})$.

7. $(3 - 2\sqrt{-5}) - (2 - 3\sqrt{-5})$.

8. $(2 - 2\sqrt{-1} + 3) - (\sqrt{16} - \sqrt{-16})$.

9. $\sqrt{-49} - 2 - 3\sqrt{-4} - \sqrt{-1} + 6$.

10. Expand $(a + b\sqrt{-1})(a + b\sqrt{-1})$.

SOLUTION

§ 91, $(a + b\sqrt{-1})(a + b\sqrt{-1}) = a^2 + 2ab\sqrt{-1} + (b\sqrt{-1})^2$

§ 384, $= a^2 + 2ab\sqrt{-1} - b^2$.

11. Expand $(\sqrt{5} - \sqrt{-3})^2$.

SOLUTION

$$(\sqrt{5} - \sqrt{-3})^2 = 5 - 2\sqrt{-15} + (-3)$$
$$= (5 - 3) - 2\sqrt{-15}$$
$$= 2 - 2\sqrt{-15}.$$

Expand the following:

12. $(2 + 3\sqrt{-1})(1 + \sqrt{-1})$.

13. $(5 - \sqrt{-1})(1 - 2\sqrt{-1})$.

14. $(\sqrt{2} + \sqrt{-2})(\sqrt{8} - \sqrt{-8})$

15. $(2 + 3i)^2$.

16. $(2 - 3i)^2$.

17. $(a - bi)^2$.

18. Show that $(1+\sqrt{-3})(1+\sqrt{-3})(1+\sqrt{-3})=-8$.

19. Show that $(-1+\sqrt{-3})(-1+\sqrt{-3})(-1+\sqrt{-3})=8$.

20. Show that $(-\frac{1}{2}+\frac{1}{2}\sqrt{-3})(-\frac{1}{2}+\frac{1}{2}\sqrt{-3})(-\frac{1}{2}+\frac{1}{2}\sqrt{-3})=1$.

21. Divide $8+\sqrt{-1}$ by $3+2\sqrt{-1}$.

First Solution

$$\begin{array}{l|l} 8+\sqrt{-1}=6+\sqrt{-1}+2 & 3+2\sqrt{-1} \\ \underline{\quad 6+4\sqrt{-1} \quad} & \underline{\quad 2-\sqrt{-1} \quad} \\ -3\sqrt{-1}+2 & \\ \underline{-3\sqrt{-1}+2} & \end{array}$$

The real term of the dividend may always be separated into two parts, one of which will exactly contain the real term of the divisor.

Second Solution

$$\frac{8+\sqrt{-1}}{3+2\sqrt{-1}}=\frac{(8+\sqrt{-1})(3-2\sqrt{-1})}{(3+2\sqrt{-1})(3-2\sqrt{-1})}=\frac{26-13\sqrt{-1}}{9+4}=2-\sqrt{-1}.$$

Divide:

22. 3 by $1-\sqrt{-2}$.

23. 2 by $1+\sqrt{-1}$.

24. $4+\sqrt{4}$ by $2-\sqrt{-2}$.

25. $9+\sqrt{-3}$ by $3-\sqrt{-3}$.

26. $16+4\sqrt{-5}$ by $3-\sqrt{-5}$.

27. a^2+b^2 by $a-b\sqrt{-1}$.

28. $a+bi$ by $ai+b$.

29. $(1+i)^2$ by $1-i$.

30. Find by inspection the square root of $3+2\sqrt{-10}$.

Solution

$$3+2\sqrt{-10}=(5-2)+2\sqrt{5\cdot-2}=5+2\sqrt{5\cdot-2}+(-2).$$

$$\therefore\ \sqrt{3+2\sqrt{-10}}=\sqrt{5+2\sqrt{5\cdot-2}+(-2)}=\sqrt{5}+\sqrt{-2}.$$

Find by inspection the square root of

31. $4+2\sqrt{-21}$.

32. $1+2\sqrt{-6}$.

33. $6-2\sqrt{-7}$.

34. $9+2\sqrt{-22}$.

35. $12\sqrt{-1}-5$.

36. $b^2+2ab\sqrt{-1}-a^2$.

37. Verify that $-1+\sqrt{-1}$ and $-1-\sqrt{-1}$ are roots of the equation $x^2+2x+2=0$.

38. Expand $(\frac{1}{2}+\frac{1}{2}\sqrt{-3})^3$.

396. *If* $\sqrt{a+bi}=\sqrt{x}+i\sqrt{y}$, *then* $\sqrt{a-bi}=\sqrt{x}-i\sqrt{y}$, *when* a *and* b *are real and* x *and* y *are positive.*

For suppose that $\sqrt{a+bi}=\sqrt{x}+i\sqrt{y}$.

Squaring, $a+bi=x+2i\sqrt{xy}-y$.

$\therefore$ § 391, $a=x-y$ and $bi=2i\sqrt{xy}$.

$$a-bi=x-2i\sqrt{xy}-y$$
$$=(\sqrt{x}-i\sqrt{y})^2.$$

Hence, $\sqrt{a-bi}=\sqrt{x}-i\sqrt{y}$.

Examples

1. Find the square root of $-5-12\sqrt{-1}$.

Solution

Let $\sqrt{x}-i\sqrt{y}=\sqrt{-5-12\sqrt{-1}}$. (1)

Then, § 396, $\sqrt{x}+i\sqrt{y}=\sqrt{-5+12\sqrt{-1}}$. (2)

Multiplying, $x+y=\sqrt{25+144}$,

or $x+y=13$. (3)

Squaring (1), $x-2i\sqrt{xy}-y=-5-12\sqrt{-1}$.

Therefore, § 391, $x-y=-5$. (4)

Solving (3) and (4), $x=4,\ y=9$.

$\therefore\ \sqrt{x}=2,\ i\sqrt{y}=3\sqrt{-1}$.

Hence, by (1), $\sqrt{-5-12\sqrt{-1}}=2-3\sqrt{-1}$.

This result may be verified by squaring $2-3\sqrt{-1}$.

2. Find the square root of $-5+12\sqrt{-1}$.

Solution

By the preceding example, $\sqrt{-5-12\sqrt{-1}}=2-3\sqrt{-1}$.

Therefore, § 396, $\sqrt{-5+12\sqrt{-1}}=2+3\sqrt{-1}$.

Find the square root of

3. $\frac{1}{3}+\frac{4}{9}\sqrt{-1}$.

4. $\frac{7}{4}-\sqrt{-15}$.

5. $-\frac{1}{2}-\frac{1}{2}\sqrt{-3}$.

6. $\frac{1}{2}-\frac{1}{2}\sqrt{-3}$.

INEQUALITIES

397. One number is said to be *greater* than another when the remainder obtained by subtracting the second from the first is *positive*, and to be *less* than another when the remainder obtained by subtracting the second from the first is *negative*.

If $a - b$ is a positive number, a is greater than b; but if $a - b$ is a negative number, a is less than b.

Any negative number is regarded as less than 0; and, of two negative numbers, that more remote from 0 is the less.

Thus, -1 is less than 0; -2 is less than -1; -3 is less than -2; etc.

An algebraic expression indicating that one number is greater or less than another is called an **Inequality**.

398. The **Sign of Inequality** is $>$ or $<$.

It is placed between two unequal numbers with the opening toward the greater.

Thus, *a is greater than b* is written $a > b$; *a is less than b* is written $a < b$.

The expressions on the left and right, respectively, of the sign of inequality are termed the *first* and *second members* of the inequality.

399. When the first members of two inequalities are each greater or each less than the corresponding second members, the inequalities are said to *subsist in the same sense*.

When the first member is greater in one inequality and less in another, the inequalities are said to *subsist in a contrary sense*.

$x > a$ and $y > b$ subsist in the same sense, also $x < 3$ and $y < 4$; but $x > b$ and $y < a$ subsist in a contrary sense.

400. 1. If 2 is added to each member of the inequality $8 > 5$, how will the two inequalities subsist? How will they subsist, if 2 is subtracted from each member?

2. Investigate other inequalities.

PRINCIPLE 1. — *If the same number or equal numbers are added to or subtracted from both members of an inequality, the resulting inequality will subsist in the same sense.*

Let $a > b$.

Then, § 397, $a - b = p$, a positive number.

Adding $c - c = 0$, Ax. 2, $a + c - (b + c) = p$.

Therefore, $a + c > b + c$.

401. 1. What is the effect of adding 2 to each member of the inequality $x - 2 > y$? What is the effect of subtracting 2 from each member of the inequality $a + 2 > b$?

2. If a term is transposed from one member of an inequality to the other, what must be done to its sign?

PRINCIPLE 2. — *A term may be transposed from one member of an inequality to the other, provided its sign is changed.*

Let $a - b > c - d$.

Adding b to each side, Prin. 1, $a > b + c - d$.

Adding $-c$ to each side, Prin. 1, $a - c > b - d$.

402. PRINCIPLE 3. — *If the signs of all the terms of an inequality are changed, the resulting inequality will subsist in a contrary sense.*

Let $a - b > c - d$.

Transposing every term, Prin. 2,

$$-c + d > -a + b;$$

that is, $$-a + b < -c + d.$$

403. 1. If both members of the inequality $10 > 8$ are multiplied by 2, how will the two inequalities subsist? How will they subsist, if both members are divided by 2?

2. How will they subsist in each case, if the multiplier or divisor is -2?

PRINCIPLE 4. — *If both members of an inequality are multiplied or divided by the same number, the resulting inequality will subsist in the same sense if the multiplier or divisor is positive, but in the contrary sense if the multiplier or divisor is negative.*

Let $a > b$.

Then, § 397, $a - b = p$, a positive number.

Multiplying by m, $ma - mb = mp$.

If m is positive, mp is positive,

and $ma > mb$.

If m is negative, mp is negative,

and $mb > ma$, or $ma < mb$.

Putting $\frac{1}{m}$ for m, the principle holds also for division.

404. 1. If the corresponding members of the inequalities $6 > 5$ and $4 > 2$ are added, how will the resulting inequality subsist? How, if $-5 > -6$ and $-2 > -4$ are added?

PRINCIPLE 5. — *If the corresponding members of any number of inequalities subsisting in the same sense are added together, the resulting inequality will subsist in the same sense.*

Let $a > b$, $c > d$, $e > f$, etc.

Then, § 397, $a - b$, $c - d$, $e - f$, etc., are positive numbers.

Hence, their sum, $a + c + e + \cdots - (b + d + f + \cdots)$, is a positive number; that is, $a + c + e + \cdots > b + d + f + \cdots$.

405. PRINCIPLE 6. — *If each member of an inequality is subtracted from the corresponding members of an equation, the resulting inequality will subsist in a contrary sense.*

Let $a > b$ and let c be any number.

Then, § 397, $a - b$ is a positive number.

Since a number is diminished by subtracting a positive number from it,

$$c - (a - b) < c.$$

Transposing, $c - a < c - b$.

That is, if each member of the inequality $a > b$ is subtracted from the corresponding member of the equation $c = c$, the result is an inequality subsisting in a contrary sense.

406. It is evident that the difference of two inequalities subsisting in the same sense, or the sum of two inequalities subsisting in a contrary sense, or the product, or the quotient of two inequalities, member by member, may have its first member greater than, equal to, or less than its second.

For example, take the inequality $12 > 6$.

Subtracting $8 > 2$, or adding $-8 < -2$, the result is $4 = 4$.

Subtracting $8 > 1$, or adding $-8 < -1$, the result is $4 < 5$.

Multiplying and dividing by $3 > 2$, the results are $36 > 12$ and $4 > 3$.

Multiplying by $-2 > -4$, the result is $-24 = -24$. Dividing by $4 > 2$, the result is $3 = 3$.

Multiplying and dividing by $-2 > -3$, the results are $-24 < -18$ and $-6 < -2$.

Examples

407. 1. Find one limit of x in the inequality $3x - 10 > 11$.

Solution

$$3x - 10 > 11.$$

Prin. 2, $$3x > 21.$$

Prin. 4, $$x > 7.$$

Therefore, the *inferior* limit of x is 7; that is, x may have any value greater than 7.

2. Find the limits of x in the simultaneous inequalities $3x + 5 < 38$ and $4x < 7x - 18$.

Solution

$$3x + 5 < 38. \qquad (1)$$

$$4x < 7x - 18. \qquad (2)$$

Transposing in (1), Prin. 2, $$3x < 33.$$

$\therefore$ Prin. 4, $$x < 11.$$

Transposing in (2), Prin. 2, $$-3x < -18.$$

Changing signs, Prin. 3, $$3x > 18.$$

$\therefore$ Prin. 4, $$x > 6.$$

The *inferior* limit of x is 6, and the *superior* limit is 11; that is, the given inequalities are satisfied simultaneously by any value of x *between* 6 and 11.

3. Find the limits of x and y in $3x - y > -14$ and $x + 2y = 0$.

SOLUTION

$$3x - y > -14. \tag{1}$$

$$x + 2y = 0. \tag{2}$$

Multiplying (1) by 2, Prin. 4,

$$6x - 2y > -28. \tag{3}$$

Adding (2) and (3), $7x > -28.$

$$\therefore x > -4. \tag{4}$$

Multiplying (2) by 3, $3x + 6y = 0.$ (5)

Subtracting (5) from (1), Prin. 1,

$$-7y > -14.$$

Dividing by -7, Prin. 4, $y < 2.$

That is, x is greater than -4, and y is less than 2.

Find the limits of x in the following:

4. $6x - 5 > 13.$

5. $5x - 1 < 6x + 4.$

6. $3x - \frac{1}{2}x < 30.$

7. $4x + 1 < 6x - 11.$

8. $\begin{cases} 4x - 11 > \frac{1}{3}x, \\ 20 - 2x > 10. \end{cases}$

9. $\begin{cases} 3 - 4x < 7, \\ 5x + 10 < 20. \end{cases}$

10. $x + \dfrac{2x}{3} + \dfrac{5x}{6} > 25$ and $< 30.$

11. Find the limits of x in $x^2 + 3x > 28.$

SOLUTION

$$x^2 + 3x > 28.$$

Transposing, Prin. 2, $x^2 + 3x - 28 > 0.$

Factoring, $(x - 4)(x + 7) > 0.$

That is, $(x - 4)(x + 7)$ is positive.

If $(x - 4)(x + 7)$ is positive, either both factors are positive or both are negative. Both factors are positive, when $x > 4$; both factors are negative, when $x < -7$.

Therefore, x can have all values except 4 and -7 and intermediate values.

Find the limits of x in the following:

12. $x^2 + 3x > 10$.

13. $x^2 + 8x > 20$.

14. $x^2 + 5x > 24$.

15. $(x - 2)(3 - x) > 0$.

16. $x^2 > 9x - 18$.

17. $x^2 + 40x > 3(4x - 25)$.

18. $x^2 + bx > ax + ab$.

19. $(x - 3)(5 - x) > 0$.

Find the limits of x and y in the following, and, if possible, one positive integral value for each unknown number:

20. $\begin{cases} 2x - 3y < 2, \\ 2x + 5y = 25. \end{cases}$

21. $\begin{cases} 3x + 2y = 42, \\ 3x - \frac{y}{7} > 16. \end{cases}$

22. $\begin{cases} x + y = 10, \\ 4x < 3y. \end{cases}$

23. $\begin{cases} y = 3x + 4, \\ 25 < 2y + 3x. \end{cases}$

24. $\begin{cases} y - x > 9, \\ \frac{7x}{20} + \frac{y}{15} = 9. \end{cases}$

25. $\begin{cases} x > y + 4, \\ x - 2y = 8. \end{cases}$

If a, b, and c are positive and unequal,

26. Which is the greater, $\frac{a+b}{a+2b}$ or $\frac{a+2b}{a+3b}$?

27. Prove that $a^2 + b^2 > 2ab$.

Suggestion. — Whether $a - b$ is positive or negative, $(a - b)^2$ is positive

28. Prove that $a^2 + b^2 + c^2 > ab + ac + bc$.

29. Prove that $a^3 + b^3 > a^2b + ab^2$.

30. Which is the greater, $\frac{a^2+b^2}{a+b}$ or $\frac{a^3+b^3}{a^2+b^2}$?

31. Prove that $\frac{a}{3b} + \frac{3b}{4a} > 1$, except when $2a = 3b$.

32. Prove that $(a - 2b)(4b - a) < b^2$, except when $a = 3b$.

33. Prove that $a^3 + b^3 + c^3 > 3abc$.

34. Prove that the sum of any positive real number, except 1, and its reciprocal is always greater than 2.

VARIABLES AND LIMITS

408. A number that has the same value throughout a discussion is called a **Constant.**

Arithmetical numbers are constants. A literal number, as a or x, is constant in a discussion, if it keeps the same value throughout that discussion.

409. A number that under the conditions imposed upon it may have a series of different values is called a **Variable.**

Variables are usually represented by x, y, z, etc.

The numbers .3, .33, .333, .3333, . . . are successive values of a variable approaching the constant $\frac{1}{3}$.

The commensurable numbers 1, 1.4, 1.41, 1.414, 1.4142, . . . are successive values of a variable approaching the constant $\sqrt{2}$.

410. An expression whose value depends upon the value of a variable is called a **Function** of that variable.

$2x+1$ is a function of x, because, if successive values are given to x, $2x+1$ will take successive values. For example, if $x=0$, $2x+1=1$; if $x=1$, $2x+1=3$; if $x=2$, $2x+1=5$, etc. x^2-2x and $\frac{1}{1-x}$ are also functions of x.

$x^2+2xz-5z^2$ is a function of x and z.

Every function of a single variable is a variable.

The variable to which different values may be given at pleasure or according to some law is called the *Independent Variable*, and the function of the independent variable is called the *Dependent Variable.*

In the first illustration x is the independent variable and $2x+1$, the function of x, is the dependent variable.

411. To discuss functions of a variable it is necessary to suppose that the variable takes its successive values according to some definite law of change.

Where a variable takes a series of values that approach nearer and nearer a given constant, so that by taking a sufficient number of steps the difference between the variable and the constant can be made numerically less than any conceivable number however small, the constant is called the **Limit** of the variable, and the variable is said to *approach its limit*.

The variable .3, .33, .333, .3333, . . ., whose increase at each step is $\frac{1}{10}$ of the previous increase, approaches $\frac{1}{3}$ as a limit. For .3 differs from $\frac{1}{3}$ by less than $\frac{1}{10}$, .33 by less than $\frac{1}{100}$, .333 by less than $\frac{1}{1000}$, etc., and by taking a sufficient number of steps it is possible to obtain a value of the variable differing from $\frac{1}{3}$ by less than any number that can be conceived of, however small.

412. The difference between a variable and its limit is a variable whose limit is zero.

As .3, .33, .333, . . . approaches its limit $\frac{1}{3}$, the variable difference $\frac{1}{3} - .3$, $\frac{1}{3} - .33$, $\frac{1}{3} - .333$, . . ., or $\frac{1}{30}$, $\frac{1}{300}$, $\frac{1}{3000}$, . . . approaches the limit zero.

A variable may approach a constant without approaching it as a limit.

The variable 6.6, 6.66, 6.666, . . ., in approaching $6\frac{2}{3}$ as a limit, approaches 7 also, but not as a limit.

A variable in approaching its limit may be always less than its limit, or always greater, or sometimes greater and sometimes less.

The variable .3, .33, .333, . . . is always less than its limit $\frac{1}{3}$.

The variable, .7, .67, .667, . . . is always greater than its limit $1 - \frac{1}{3}$.

The sum of the first n terms of the geometrical series $1, -\frac{1}{2}, \frac{1}{4}, -\frac{1}{8}, \frac{1}{16}, -\frac{1}{32}, \ldots$ is a variable whose successive values $1, \frac{1}{2}, \frac{3}{4}, \frac{5}{8}, \frac{11}{16}, \frac{21}{32}, \ldots$ are alternately greater and less than the limit $\frac{2}{3}$.

A variable may increase or decrease according to its law of change and become numerically greater or less than any assignable number.

The variable $1, -2, 4, -8, 16, \ldots$ may become numerically greater than any number that can be assigned. The variable $1, \frac{1}{2}, \frac{1}{4}, \frac{1}{8}, \frac{1}{16}, \ldots$ may become numerically less than any number that can be assigned.

413. A variable that may become numerically greater than any assignable number is said to be **Infinite**.

The symbol of an infinite number is ∞.

414. A variable that may become numerically less than any assignable number is said to be **Infinitesimal**.

An infinitesimal is a variable whose limit is zero.

The character 0 is used as a symbol for an infinitesimal number as well as for absolute zero, the result obtained by subtracting a number from itself.

415. A number that cannot become either infinite or infinitesimal is said to be **Finite.**

416. Interpretation of $\frac{a}{0}$.

If the numerator of the fraction $\frac{a}{x}$ is constant while the denominator decreases regularly until it becomes numerically less than any assignable number, the quotient will increase regularly and become numerically greater than any assignable number.

$$\therefore \frac{a}{0} = \infty. \quad \text{That is,}$$

If a finite number is divided by an infinitesimal number, the quotient will be an infinite number.

417. Interpretation of $\frac{a}{\infty}$.

If the numerator of the fraction $\frac{a}{x}$ is constant while the denominator increases regularly until it becomes numerically greater than any assignable number, the quotient will decrease regularly and become numerically less than any assignable number.

$$\therefore \frac{a}{\infty} = 0. \quad \text{That is,}$$

If a finite number is divided by an infinite number, the quotient will be an infinitesimal number.

418. The symbol $\doteq$ is read '*approaches as a limit.*'

The abbreviation *lim.* is used for *limit.*

$x \doteq a$ is read 'x approaches a as its limit.' The expression lim. $x = a$ is equivalent to $x \doteq a$, and is read 'the limit of x is a.'

Though ∞ represents a variable that may transcend all finite values, it is convenient to use the expression $x \doteq \infty$ to indicate that x increases numerically *without limit.*

Thus, as $x \doteq \infty$, $\frac{1}{x} \doteq 0$.

419. PRINCIPLE 1. — *A variable cannot approach two unequal limits at the same time.*

For in approaching the more remote as a limit the variable would reach a value intermediate between the two, and thereafter in approaching one as a limit it would recede from the other, which, therefore, could not be a limit.

420. PRINCIPLE 2. — *If two variables are always equal and each approaches a limit, their limits are equal.*

For in their values the two variables are but one.

Hence, Prin. 1, the limit of their common values is their common limit.

421. 1. Since the limit of $.333\cdots$ is $\frac{1}{3}$, what is the limit of $2 + .333\cdots$, or $2.333\cdots$? of $4 + .333$, or $4.333\cdots$? of $5.333\cdots$? of $2 - .333\cdots$, or $1.666\cdots$? of $.333\cdots - .13$, or $.203\cdots$?

2. What is the limit of the algebraic sum of a constant and a variable?

PRINCIPLE 3. — *The limit of the algebraic sum of a constant and a variable is the algebraic sum of the constant and the limit of the variable.*

422. 1. Since the limit of $.333\cdots$ is $\frac{1}{3}$, what is the limit of $.666\cdots$? of $.111\cdots$?

2. Since the limit of $1 + \frac{1}{2} + \frac{1}{4} + \cdots$ is 2, what is the limit of $3 + \frac{3}{2} + \frac{3}{4} + \cdots$? of $\frac{1}{10} + \frac{1}{20} + \frac{1}{40} + \cdots$?

3. How may the limit of the product of a variable and a constant be obtained from the limit of the variable?

PRINCIPLE 4. — *The limit of the product of a variable and a finite constant is equal to the product of the constant and the limit of the variable.*

The above principle may be established as follows:

CASE 1. — *When the limit of x is 0.*

Let k be any finite constant.

It is to be proved that $kx \doteq 0$.

However small any number, as q, may be, since $x \doteq 0$, x may be made numerically less than $q \div k$.

Hence, kx may be made numerically less than q; that is, kx may be made numerically less than any number however small.

Therefore, § 411, $kx \doteq 0$.

CASE 2. — *When the limit of x is not 0.*

Let k be any finite constant, a the limit of x, and y the variable that must be added to x to produce a.

It is to be proved that $kx \doteq ka$.

Since $x + y = a$, $x = a - y$;

$\therefore kx = ka - ky$.

Prin. 2, $\lim. (kx) = \lim. (ka - ky)$

Prin. 3, $= ka - \lim. (ky)$.

But since, § 412, $y \doteq 0$, by Case 1, $\lim. ky = 0$.

Hence, $\lim. (kx) = ka - 0 = ka$;

that is, $kx \doteq ka$.

NOTE. — The principle holds for the limit of a variable *divided* by a constant, since dividing by k is equivalent to multiplying by $\frac{1}{k}$.

423. PRINCIPLE 5. — *The limit of the variable sum of any finite number of variables is equal to the sum of their limits.*

The above principle may be established as follows:

Let $x \doteq a$, $y \doteq b$, $z \doteq c$, etc., to any finite number of variables, as n.

It is to be proved that $\lim. (x + y + z + \cdots) = a + b + c + \cdots$.

Let v_1, v_2, v_3, $\cdots$ be the variable differences between x, y, z $\cdots$ and their respective limits.

Then, $x + y + z + \cdots = (a + b + c + \cdots) - (v_1 + v_2 + v_3 + \cdots)$,

and $\lim. (x + y + z + \cdots) = \lim. [(a + b + c + \cdots) - (v_1 + v_2 + v_3 + \cdots)]$

Prin. 3, $= a + b + c + \cdots - \lim. (v_1 + v_2 + v_3 + \cdots)$.

Since, § 412, $v_1 \doteq 0$, $v_2 \doteq 0$, $v_3 \doteq 0$, etc., however small any number, as q, may be, each of the n variables, v_1, v_2, v_3, etc., may be made less than $q \div n$, and hence their sum may be made less than q.

Therefore, § 411, $\lim. (v_1 + v_2 + v_3 + \cdots) = 0$.

Hence, $\lim. (x + y + z + \cdots) = a + b + c + \cdots$.

424. PRINCIPLE 6. — *The limit of the variable product of two or more variables is equal to the product of their limits.*

The above principle may be established as follows:

Given, $x \doteq a$ and $y \doteq b$.

It is to be proved that $\lim. (xy) = ab$.

Let $v_1 = a - x$ and $v_2 = b - y$.

Then, $xy = (a - v_1)(b - v_2)$,

and $\lim. (xy) = \lim. [ab - bv_1 - av_2 + v_1v_2]$

Prin. 5, Prin. 4, $= ab - b \lim. v_1 - a \lim. v_2 + \lim. (v_1v_2)$

§ 412, $= ab + \lim. (v_1v_2)$.

Since when v_1 and v_2 are near their common limit 0, their product is much less than either v_1 or v_2,

$$\text{lim. } (v_1 v_2) = 0.$$

Hence, $$\text{lim. } (xy) = ab + 0 = ab.$$

Similarly, the principle may be established for any number of variables.

425. PRINCIPLE 7. — *The limit of the variable quotient of two variables is equal to the quotient of their limits, provided the limit of the divisor is not 0.*

The above principle may be established as follows:

Let $x = \frac{y}{z}$; and let lim. z be not 0.

It is to be proved that $$\text{lim. } x = \frac{\text{lim. } y}{\text{lim. } z}.$$

Since $x = \frac{y}{z}$, $$y = xz.$$

Prin. 6, $$\text{lim. } y = \text{lim. } x \cdot \text{lim. } z.$$

Therefore, $$\text{lim. } x = \frac{\text{lim. } y}{\text{lim. } z}.$$

The principle has no meaning when $z \doteq 0$, since lim. y cannot be divided by 0.

426. When by causing a variable x to approach sufficiently near to a it is possible to make the value of a given function of x approach as near as we please to a finite constant l, l is called the **limit of the function when** $x \doteq a$.

Suppose that .1, .11, .111, .1111, ... are successive values of x approaching $\frac{1}{9}$ as a limit. Then, the corresponding values of $1 - 2x$, a function of x, are .8, .78, .778, .7778, values of a variable approaching $\frac{7}{9}$ as a limit. As $x \doteq \frac{1}{9}$, the function of x, $1 - 2x$, $\doteq \frac{7}{9}$; for by causing x to approach sufficiently near to $\frac{1}{9}$ it is possible to make $1 - 2x$ approach as near as we please to $\frac{7}{9}$.

The expression

$$\text{lim. } [\text{function of } x]_{x \doteq a}$$

is read 'limit of function of x as x approaches a as a limit.'

Thus, $\text{lim. } (1 - 2x)_{x \doteq \frac{1}{9}} = \frac{7}{9}$ indicates that as x approaches its limit $\frac{1}{9}$, $1 - 2x$ approaches the limit $\frac{7}{9}$.

427. In finding the limiting values of the functions given in the following examples, the student is expected to apply the principles that have been established above.

Finding the limiting value of a function of x as $x \doteq a$ is called **evaluating** the function for $x = a$.

EXAMPLES

If $x \doteq a$, $y \doteq 2$, and $z \doteq 0$, find the limit of

1. $x + y + z$.
2. $axy - x^2$.
3. $\frac{x}{2} - \frac{y}{a}$.
4. $x - \frac{1}{2}y + ax - y^2$.
5. $(x + y)x - (x - y)z$.
6. $\frac{a + x + z}{x - y} + \frac{x + y}{a}$.

Find the value of

7. $\text{Lim.}\left[\frac{x^2 - 5x + 8}{x - 2}\right]_{x \doteq 3}$
8. $\text{Lim.}\left[\frac{x^3 + 4x + 1}{x^4 + x^2 + 1}\right]_{x \doteq -1}$
9. $\text{Lim.}\left[\frac{x^2 - 3x + 4}{x + 6}\right]_{x \doteq 2}$
10. $\text{Lim.}\left[\frac{1 + x^n}{1 + x}\right]_{x \doteq 1}$

428. Indeterminate forms $\frac{0}{0}$, $\frac{\infty}{\infty}$, $0 \times \infty$, $\infty \times 0$, $\infty - \infty$.

For all values of a and x,

$$\frac{\frac{a}{x}}{\frac{1}{x}} = \frac{a}{x} \cdot \frac{x}{1} = a. \qquad (1)$$

If $x \doteq \infty$, (1) becomes $\frac{0}{0} = 0 \times \infty = a$.

If $x \doteq 0$, (1) becomes $\frac{\infty}{\infty} = \infty \times 0 = a$.

Since a denotes any number whatever, $\frac{0}{0}$, $\frac{\infty}{\infty}$, $0 \times \infty$, and $\infty \times 0$ are symbols for *indeterminate numbers*.

If k is any constant, $\infty_1 + k = \infty_2$; $\therefore\ \infty_2 - \infty_1 = k$.

Hence, $\infty - \infty$ is a symbol for an indeterminate number.

429. Since every function of a single variable is a variable, it is evident that the preceding principles apply to *functions* of a variable. Thus, to apply to functions of a variable, Prin. 5, 6, and 7 may be stated as follows:

The limit of the sum of a finite number of functions of x is equal to the sum of their limits.

The limit of the product of a finite number of functions of x is equal to the product of their limits.

The limit of the quotient of two functions of x is equal to the quotient of their limits, provided the limit of the divisor is not zero.

These principles fail to give a limit whenever the result obtained involves one of the indeterminate forms,

$$\infty - \infty,\ 0 \times \infty,\ \infty \times 0,\ \frac{0}{0},\ \frac{\infty}{\infty}.$$

430. The preceding principles of limits lead to the conclusion that the limit of a function is found by *substituting* the limits of the variables for the variables, except when such a substitution gives an indeterminate form (§ 429).

Thus, if lim. $x = 5$ and lim. $y = 2$, the limit of $4x - 3y$ is found by substituting 5 for x and 2 for y in the function $4x - 3y$. But if substitution is employed directly to evaluate the functions $\frac{1}{x-1} - \frac{1}{x(x-1)}$, $\frac{a}{y} \times y$, and $(x^2 - 1) \div (x - 1)$ when $x \doteq 1$ and $y \doteq 0$, these functions take the forms $\infty - \infty$, $\infty \times 0$, and $0 \div 0$, respectively.

When the method of evaluation by substitution in the given function fails, the evaluation of the function is performed by the aid of Prin. 2.

Thus, to evaluate $(x^2 - 1) \div (x - 1)$ when $x \doteq 1$, find another function of x, as $x + 1$, equal to the given function $(x^2 - 1) \div (x - 1)$ for all values assumed by x while approaching the limit 1.

If x takes the successive values

$$2,\ \tfrac{3}{2},\ \tfrac{5}{4},\ \tfrac{9}{8},\ \tfrac{17}{16},\ \tfrac{33}{32},\ \ldots, \text{ approaching 1,}$$

then both functions $(x^2 - 1) \div (x - 1)$ and $x + 1$, take the successive values

$$3,\ \tfrac{5}{2},\ \tfrac{9}{4},\ \tfrac{17}{8},\ \tfrac{33}{16},\ \tfrac{65}{32},\ \ldots, \text{ approaching 2.}$$

Since the two functions are equal for all values of x as x approaches its limit 1, by Prin. 2 they have the same limit. This limit is lim. $(x + 1)_{x \doteq 1}$, which by substituting lim. x for x is found to be $1 + 1$, or 2.

EXAMPLES

Find the value of

1. $\text{Lim.}\left[\dfrac{x^3-8}{x^2-4}\right]_{x\doteq 2}$

2. $\text{Lim.}\left[\dfrac{1-x^5}{1-x}\right]_{x\doteq 1}$

3. $\text{Lim.}\left[\dfrac{x^4-a^4}{x^3+a^3}\right]_{x\doteq a}$

4. $\text{Lim.}\left[\dfrac{x^3+b^3}{x^2-b^2}\right]_{x\doteq -b}$

5. $\text{Lim.}\left[\dfrac{x^2-5x+6}{x^2-4}\right]_{x\doteq 2}$

6. $\text{Lim.}\left[\dfrac{x^4-3x^3+5x^2-2x-1}{x^3-8x^2+7}\right]_{x\doteq 1}$

7. Find the limiting value of $\dfrac{4x^3-2x^2+3x+1}{3x^3-x^2+x+2}$ when $x\doteq 0$ and also when $x\doteq\infty$.

SOLUTION. — As x approaches the limit 0, the first three terms of the numerator and also of the denominator become infinitely small as compared with the fourth, and, consequently, may be neglected. Hence, when $x\doteq 0$, the fraction approaches the limiting value $\frac{1}{2}$.

As $x\doteq\infty$, that is, as x becomes indefinitely greater, the last three terms of the numerator and also of the denominator become infinitely small as compared with the first, and, consequently, may be neglected. Hence, when $x\doteq\infty$, the fraction approaches the limiting value $\dfrac{4x^3}{3x^3}$, or $\dfrac{4}{3}$.

Find the limiting values of the following when $x\doteq 0$ and when $x\doteq\infty$:

8. $\dfrac{1+x^2+x^4+x^6}{1-x^2-x^4-2x^6}$.

9. $\dfrac{5x^3-x^2+4x+2}{2x^3+3x^2-x+1}$.

10. $\dfrac{4x^4-3x^3+x+1}{2x^4-x^3-x^2+x+1}$.

11. $\dfrac{2x^4-3x^3+2x^2-2}{x^4-2x^2+x+1}$.

12. $\dfrac{5x+10}{x^2+2x+2}$.

13. $\dfrac{3x-4}{x^2-x-8}$.

14. $\dfrac{2x^2-4x+1}{2x-1}$.

15. $\dfrac{4x^3+5x^2+2x}{2x^3+x+1}$.

INCOMMENSURABLE NUMBERS

431. Though an incommensurable number (§ 227) cannot be expressed by any integer or by any fraction with integral terms, a commensurable number can always be found to differ from any incommensurable number by less than any number that may be assigned, however small.

For example, though $\sqrt{2}$ cannot be expressed by a decimal that terminates, commensurable numbers can be found to approximate to the true value of $\sqrt{2}$. For by the process of evolution a commensurable number can be found to differ from $\sqrt{2}$ by less, successively, than .1, .01, .001, .0001, ···, the difference finally becoming smaller than any number, however small, that can be assigned.

To generalize: let p and q be variables each of which may take any integral value whatever. Then, any commensurable number may be exactly represented by $\frac{p}{q}$, and since q may be made as large as we please and p may be given any integral value whatever, any incommensurable number may be represented by $\frac{p}{q}$ to any required degree of approximation.

Thus, any incommensurable number may be included between $\frac{p}{q}$ and $\frac{p+1}{q}$, each of which differs from it by less than $\frac{1}{q}$; and since q may be made as large as we please, the limit of this difference is zero.

Hence, *an incommensurable number may be regarded as the limit of a variable commensurable number.*

Thus, $\sqrt{2}$ is the limit of the series $1 + \frac{4}{10} + \frac{1}{100} + \frac{4}{10000} + \cdots$, the sum of n terms of which is 1, 1.4, 1.41, 1.414, ···, as n takes the successive values 1, 2, 3, 4, ···.

432. By § 429, the principle of § 420 may be stated as follows:

If two functions of the same variable or variables are equal for all values of the variables, the limits of the two functions, as the variables approach their respective limits, are equal.

Thus, $x + y$ and $y + x$ are equal for all values of x and y, and if x and y approach limits, $\lim.\ (x+y) = \lim.\ (y + x)$.

433. Commutative, Associative, and Distributive Laws.

Let a, b, and c be incommensurable constants, the limits, § 431, of the commensurable variables, x, y, and z, respectively.

1. *Commutative Law for Addition and Subtraction.*

§ 55, $$x + y = y + x.$$

Hence, § 432, $$\lim.\ (x + y) = \lim.\ (y + x);$$

that is, § 423, $$a + b = b + a.$$

Similarly, $$a - b = -b + a.$$

2. *Commutative Law for Multiplication and Division.*

§ 82, $$xy = yx.$$

Hence, § 432. $$\lim.\ (xy) = \lim.\ (yx);$$

that is, § 424, $$ab = ba.$$

Similarly, § 106, $$a \cdot \frac{1}{b} = \frac{1}{b} \cdot a.$$

3. *Distributive Law for Multiplication and Division.*

§§ 85, 87, z being either a monomial or a polynomial,

$$(x + y)z = xz + yz.$$

Hence, § 432, $$\lim.\ [(x + y)z] = \lim.\ (xz + yz);$$

that is, §§ 424, 423, $$(a + b)c = ac + bc.$$

Similarly, § 106, $$(a + b)\frac{1}{c} = a \cdot \frac{1}{c} + b \cdot \frac{1}{c};$$

that is, $$(a + b) \div c = a \div c + b \div c.$$

4. *Associative Law.*

The Associative Law follows from the Commutative Law, subject to the rules for signs given in § 68, 2 and § 104, 2.

434. Meaning of a^n when n is incommensurable.

Since an incommensurable number is neither even nor odd, if a is negative or imaginary, the rule for the sign of a power given in § 218, Prin. 1, cannot be used to find the sign of $(a)^n$ when n is incommensurable. In the following discussion, then, a will denote a positive real number.

Since $\sqrt{3}$ lies between corresponding terms of the two series

$$1,\ \frac{17}{10},\ \frac{173}{100},\ \frac{1732}{1000},\ \cdots,\ \frac{p}{q},\ \cdots,$$

and

$$2,\ \frac{18}{10},\ \frac{174}{100},\ \frac{1733}{1000},\ \cdots,\ \frac{p+1}{q},\ \cdots,$$

it may be inferred that $a^{\sqrt{3}}$ lies between corresponding terms of

$$a^1,\ a^{\frac{17}{10}},\ a^{\frac{173}{100}},\ a^{\frac{1732}{1000}},\ \cdots,\ a^{\frac{p}{q}},\ \cdots,$$

and

$$a^2,\ a^{\frac{18}{10}},\ a^{\frac{174}{100}},\ a^{\frac{1733}{1000}},\ \cdots,\ a^{\frac{p+1}{q}},\ \cdots,$$

provided $a^{\frac{1}{q}}$ is restricted to indicate the principal qth root.

Passing to the general case, in a^x let n be the incommensurable limit of the variable exponent x.

Then two values of x, as $\frac{p}{q}$ and $\frac{p+1}{q}$, can be found to include n between them; and by taking q sufficiently great the difference between the values of x, and, consequently, the difference between n and either value of x, may be made as small as we please.

It will now be proved that the difference between the *powers* $a^{\frac{p+1}{q}}$ and $a^{\frac{p}{q}}$, and, consequently, the difference between a^n and either power, can be made as small as we please by taking the difference between the corresponding *exponents* sufficiently small; that is, that

$$\lim.\left(a^{\frac{p+1}{q}} - a^{\frac{p}{q}}\right)_{q \doteq \infty} = 0.$$

1. *When* $a > 1$.

Since $a > 1$, $a^{\frac{1}{q}} > 1$ and $a^{\frac{1}{q}} - 1$ is positive. Let $a^{\frac{1}{q}} - 1 = z$.

$$\therefore\ a^{\frac{1}{q}} = 1 + z,\ \text{and}\ a = (1+z)^q = 1 + qz + \cdots,$$

every term of which is positive, z being positive.

Therefore, $a > 1 + qz$, whence $z < \frac{a-1}{q}$,

which approaches 0 as $q \doteq \infty$.

Hence, when $a > 1$, $\lim.\ (a^{\frac{1}{q}} - 1)_{q \doteq \infty} = 0.$ (1)

Since $a^{\frac{p}{q}} < a$ when $q > p$, $a^{\frac{p}{q}}$ remains finite as $q \doteq \infty$. Hence, § 424 and (1), $\lim.\ [a^{\frac{p}{q}}(a^{\frac{1}{q}} - 1)]_{q \doteq \infty} = 0$, or $\lim.\ (a^{\frac{p+1}{q}} - a^{\frac{p}{q}})_{q \doteq \infty} = 0.$

2. *When* $a = 1$, $a^{\frac{p+1}{q}} - a^{\frac{p}{q}} = 0.$

3. *When* a *is positive and* < 1.

In this case $\frac{1}{a} > 1$ and $\left(\frac{1}{a}\right)^{\frac{1}{q}} - 1$, or $a^{-\frac{1}{q}} - 1$, is positive.

Hence, by (1), $\lim.\ (a^{-\frac{1}{q}} - 1)_{q \doteq \infty} = 0.$ (2)

Since a is positive and < 1, $a^{\frac{p+1}{q}}$ cannot become greater than 1 however great q becomes. Therefore, § 424 and (2),

$$\lim.\ [-a^{\frac{p+1}{q}}(a^{-\frac{1}{q}} - 1)]_{q \doteq \infty} = 0, \text{ or } \lim.\ (a^{\frac{p+1}{q}} - a^{\frac{p}{q}})_{q \doteq \infty} = 0.$$

It has been proved that $\lim.\ (a^{\frac{p+1}{q}} - a^{\frac{p}{q}})_{q \doteq \infty} = 0$ *for all positive real values of the base* a. This formula is true when $\frac{1}{a}$ is substituted for a, since $\frac{1}{a}$ is positive and real when a is positive and real.

Therefore, $\lim.\ (a^{-\frac{p+1}{q}} - a^{-\frac{p}{q}})_{q \doteq \infty} = 0,$

in which the values of x are negative. Hence,

When a *is any positive real base, the difference between two values of* a^x *that include* a^n *between them, as* $a^{\frac{p+1}{q}}$ *and* $a^{\frac{p}{q}}$, *or* $a^{-\frac{p+1}{q}}$ *and* $a^{-\frac{p}{q}}$, *can be made as small as we please by taking the difference between the corresponding commensurable exponents sufficiently small.*

Therefore, when n is incommensurable and a is positive and real, a^n *is defined as the limit of* a^x *when* $x \doteq n$.

435. When the change in a function of a variable corresponding to an infinitesimal change in the variable is an infinitesimal, the function is called a **Continuous Function** of the variable, or the function is said to *vary continuously* with the variable.

a^x is a continuous function of x when a is positive and real.

436. Proofs of the laws of exponents.

Let m and n be incommensurable constant exponents, and a any positive real number. Then, m and n may be defined by the relations $x \doteq m$ and $y \doteq n$, and by § 434, a^m and a^n may be defined by the relations $a^x \doteq a^m$ and $a^y \doteq a^n$, x and y being variable commensurable numbers.

I. § 240, $$a^x \cdot a^y = a^{x+y}. \tag{1}$$

§ 432, $$\lim.(a^x \cdot a^y) = \lim. a^{x+y}. \tag{2}$$

§ 424, $$\lim.(a^x \cdot a^y) = (\lim. a^x)(\lim. a^y)$$

by definition, $$= a^m \cdot a^n. \tag{3}$$

By definition, $$\lim. a^{x+y} = a^{m+n}. \tag{4}$$

By (3) and (4), $$a^m \cdot a^n = a^{m+n}. \tag{5}$$

II. By law I, $$a^{m-n} \cdot a^n = a^{m-n+n} = a^m.$$

$$a^{m-n} = a^m \div a^n. \tag{6}$$

III. § 249, $$(a^x)^y = a^{xy}. \tag{7}$$

By definition, $$(a^x)^y - (a^x)^n \doteq 0 \text{ when } y \doteq n, \tag{8}$$

and $$(a^x)^n - (a^m)^n \doteq 0 \text{ when } x \doteq m. \tag{9}$$

(8) + (9), § 423, $$(a^x)^y - (a^m)^n \doteq 0;$$

that is, when $x \doteq m$ and $y \doteq n$, $\lim.(a^x)^y = (a^m)^n$. (10)

Again, by definition, $$\lim. a^{xy} = a^{\lim.(xy)}$$

$$= a^{\lim. x \lim. y}$$

$$= a^{mn}. \tag{11}$$

Since, § 432, by (7), $\lim.(a^x)^y = \lim. a^{xy}$,

by (10) and (11), $$(a^m)^n = a^{mn}.$$

IV. § 250, $$\sqrt[y]{a^x} = a^{x \div y},$$

or $$(a^x)^{\frac{1}{y}} = a^{x \cdot \frac{1}{y}}.$$

Hence, by the preceding proof,

$$\sqrt[n]{a^m} = a^{m \div n}.$$

V. § 251, $$(ab)^x = a^x b^x.$$

§ 432, $$\lim.(ab)^x = \lim.(a^x b^x).$$

By definition and § 424, $$(ab)^n = a^n b^n.$$

INTERPRETATION OF RESULTS

437. When the roots obtained by solving an *equation* satisfy the equation, the solution has been properly performed; but the results found in solving a *problem* may sometimes be at variance with some condition of the problem. Consequently, the interpretation of results becomes important.

POSITIVE RESULTS

438. Since the numbers sought in the solution of a problem are arithmetical rather than algebraic, when positive results are obtained, it is not likely that they will conflict with the conditions of the problem. Sometimes, however, even a positive result violates one or more of the conditions of a problem.

In such cases the problem is *impossible.*

439. 1. A club consisting of 25 members raised the sum of \$13 by assessing the men 80 cents each and the women 40 cents each. How many men were there, and how many women?

SOLUTION

Let x = the number of men.

Then, $25 - x$ = the number of women;

$$\tfrac{4}{5}x + \tfrac{2}{5}(25 - x) = 13;$$

whence, $x = 7\tfrac{1}{2}$,

and $25 - x = 17\tfrac{1}{2}$.

Though the numbers found will satisfy the equation, yet since the number of men and the number of women cannot be fractional, the problem is *impossible.*

2. The second digit of a number expressed by two digits is twice the first, and 4 times the first digit is 9 greater than the second. What is the number?

SOLUTION

Let x = the first digit.

Then, $2x$ = the second digit;

$\therefore$ $4x = 2x + 9$;

whence, $x = 4\frac{1}{2}$, the first digit,

and $2x = 9$, the second digit.

While these numbers satisfy the equation, they fail to satisfy the implied condition that the digits must be integers.

Hence, the problem is *impossible.*

NEGATIVE RESULTS

440. A few examples will suggest the methods to be employed in the interpretation of negative results.

1. If A is 40 years old and B is 30, in how many years will A be twice as old as B?

SOLUTION

Let x = the number of years before A will be twice as old as B.

Then, $40 + x = 2(30 + x)$;

whence, $x = -20$.

Though the result is *algebraically* correct, inasmuch as -20 substituted for x satisfies the equation, nevertheless it is *arithmetically* absurd. Hence, the conditions of the problem are inconsistent with each other. Had the result been $+20$, the statement that A would be twice as old as B in 20 years would have been arithmetically reasonable. However, since $-x = +20$, the equation will give a result arithmetically reasonable, if $-x$ is substituted for x; that is, if x is taken to represent the number of years *since* A was twice as old as B.

The conditions of the problem should, therefore, be modified as follows: If A is 40 years old and B is 30, how many years ago was A twice as old as B?

2. How much money has A, if $\frac{1}{4}$ of his money is 5 dollars more than $\frac{1}{3}$ of it?

SOLUTION

Let x = the number of dollars A has.

Then, $\frac{x}{4} - \frac{x}{3} = 5.$

Solving $x = -60.$

While the result -60 satisfies the equation, it violates the supposition, made in the problem, that A has some money.

If $-x$ is substituted for x, the equation becomes

$$\frac{x}{3} - \frac{x}{4} = 5; \text{ whence, } x = 60.$$

The problem when modified to express conditions *arithmetically* reasonable will be: How much money has A, if $\frac{1}{4}$ of it is 5 dollars *less* than $\frac{1}{3}$ of it; or, if -60 dollars is interpreted as 60 dollars *in debt:* How much money does A *owe,* if $\frac{1}{3}$ of what he owes is 5 dollars more than $\frac{1}{4}$ of it?

441. From the above discussions we may infer:

1. *A negative result indicates that some quantity in the problem has been applied in the wrong direction.*

2. *A possible problem analogous to the given problem may be formed by changing the absurd conditions to their opposites.*

PROBLEMS

442. Interpret arithmetically the negative results obtained by solving the following:

1. If A is 40 years old and B is 25, in how many years will B be half as old as A?

2. Find the numbers whose sum is 6 and difference 10.

3. What fraction is equal to $\frac{3}{5}$ if 1 is added to its numerator, or to $\frac{2}{3}$, if 1 is added to its denominator?

4. A boy bought some apples for 24 cents. Had he received 4 more for that sum, the cost of each would have been 1 cent less How many did he buy?

5. A man worked 7 days, during which he had his son with him 3 days, and received 22 shillings. He afterwards worked 5 days, during which he had his son with him 1 day, and received 18 shillings. What were the daily wages of each?

ZERO RESULTS

443. When the result obtained by solving a problem is zero, it may sometimes indicate that the problem is impossible, and sometimes it may be the proper answer to the question.

1. A dealer had two kinds of tea worth 75 and 60 cents per pound, respectively. How many pounds of each must he take to make a mixture of 45 pounds worth \$27?

SOLUTION

Let x = the number of pounds of the better kind.

Then, $45 - x$ = the number of pounds of the poorer kind;

$$\therefore \tfrac{3}{4}x + \tfrac{3}{5}(45 - x) = 27;$$

whence, $$x = 0.$$

This result means that no such mixture can be made. In fact, 45 pounds of the poorer tea is worth \$27.

2. A is 48 years old, and B is 16 years old. After how many years will A be 3 times as old as B?

SOLUTION

Let x = the required number of years.

Then, $$48 + x = 3(16 + x).$$

Solving, $$x = 0.$$

This result indicates that A is *now* 3 times as old as B.

3. What number is equal to the square of itself?

SOLUTION

Let x = the number.

Then, $$x = x^2,$$

$$x(x - 1) = 0;$$

$$\therefore x = 1 \text{ or } 0.$$

These results indicate that no number except 1 is equal to the square of itself.

INDETERMINATE RESULTS

444. 1. A lady being asked her age replied, "If from 3 times my age you take 4 years and divide the difference by 2, you will have twice my age less half of my age 4 years hence." What was her age?

SOLUTION

Let x = the number of years.

Then,
$$\frac{3x-4}{2} = 2x - \frac{x+4}{2}, \tag{1}$$
$$3x - 4 = 4x - x - 4, \tag{2}$$
$$(3-3)x = 0; \tag{3}$$
$$\therefore\ x = \frac{0}{0}. \tag{4}$$

Since (2) may be reduced to the identity $3x - 4 = 3x - 4$, it may be satisfied by any value of x whatever. This relation, § 428, is expressed by (4). Hence, the problem is *indeterminate*.

PROBLEMS

445. 1. If twice a certain number is subtracted from the square of the number, the result will be 1 less than the square of a number 1 less. What is the number?

2. A father is 30 years older than his son, and the sum of their ages is 30 years less than twice their father's age. What is the son's age?

3. The sum of the first and third of three consecutive integers is equal to twice the second. What are the integers?

4. A bought 400 sheep in two flocks, paying \$1.50 per head for the first flock and \$2 per head for the second. He lost 30 of the first flock and 56 of the second, but by selling the rest of the first flock at \$2 per head and the rest of the second at \$2.50 per head, he neither lost nor gained. How many sheep were there in each flock originally?

5. A and B receive the same monthly salary. A is employed 10 months in the year and his annual expenses are \$600. B is employed 8 months in the year and his annual expenses are \$480. If A saves as much money in 4 years as B saves in 5 years, what is the monthly salary of each?

INFINITE RESULTS

446. An infinite result indicates that the problem is *impossible.*

1. If a man's yearly income is a dollars and his yearly expenses are a dollars, in how many years will he have saved b dollars?

SOLUTION

Let $x =$ the required number of years.

Then, $$x = \frac{b}{a-a} = \frac{b}{0}, \text{ or } \infty.$$

That is, he will *never* have saved b dollars in this way.

2. A reservoir is fitted with three pipes. One pipe can fill the reservoir in 15 hours, the second can fill it in $\frac{2}{3}$ of that time, and the third pipe can empty it in 6 hours. If the reservoir is full and the three pipes are opened, in what time will it be emptied?

SOLUTION

Let $x =$ the required number of hours.

Then, $$\frac{1}{15} + \frac{1}{10} - \frac{1}{6} = \frac{1}{x}.$$

Solving, $$x = \frac{60}{0}, \text{ or } \infty.$$

That is, the reservoir will *never* be emptied under these conditions.

3. What number added to both terms of the fraction $\frac{1}{2}$ will make the fraction equal to 1?

SOLUTION

Let $x =$ the number.

Then, $$\frac{1+x}{2+x} = 1.$$

Clearing, $$1 + x = 2 + x.$$

Solving, $$x = \frac{1}{0} \text{ or } \frac{-1}{0};$$

that is, $$x = +\infty \text{ or } -\infty.$$

Consequently, there is no such number; but the larger the number in numerical value, the nearer will the resulting fraction approach the value 1.

THE PROBLEM OF THE COURIERS

447. Two couriers, A and B, travel on the same road in the direction from X to Y at the rates of m and n miles an hour, respectively. At a certain time, say 12 o'clock, A is at P, and B is at Q, a miles from P. Find when and where they are together.

Solution

Suppose that time reckoned from 12 o'clock toward a later time is positive and toward an earlier time, negative; also, that distances measured from P toward the right are positive, and toward the left, negative.

Let x represent the number of hours from 12 o'clock, and y the number of miles from P, when A and B are together. Then, they will be together $y - a$ miles from Q.

Since A travels mx miles and B travels nx miles before they are together,

$$y = mx, \tag{1}$$

and

$$y - a = nx. \tag{2}$$

Solving (1) and (2),

$$x = \frac{a}{m - n}, \text{ the required time.} \tag{3}$$

$$y = \frac{ma}{m - n}, \text{ the required distance.} \tag{4}$$

Discussion

1. *When $a > 0$ and $m > n$.*

When $a > 0$ and $m > n$, the numerator and denominator in (3) and also in (4) are positive; hence, x and y are positive.

That is, A overtakes B some time after 12 o'clock, somewhere at the right of P.

2. *When $a > 0$ and $m < n$.*

When $a > 0$ and $m < n$, both x and y are negative.

That is, at 12 o'clock B is ahead of A and gaining on him, and they were together some time before 12 o'clock and somewhere at the left of P.

3. *When $a > 0$ and $m = n$.*

When $a > 0$ and $m = n$, x and y are positive and infinitely great.

That is, at 12 o'clock B is ahead of A and traveling at the same rate; consequently, he will never be overtaken by A.

4. *When $a = 0$ and $m > n$ or $m < n$.*

When $a = 0$ and $m > n$ or $m < n$, $x = 0$ and $y = 0$.

If $m > n$, $x = +0$ and $y = +0$. That is, at 12 o'clock **A and B** are together, and A is passing B.

If $m < n$, $x = -0$ and $y = -0$. That is, at 12 o'clock A and B are together, and B is passing A.

5. *When $a = 0$ and $m = n$.*

When $a = 0$ and $m = n$, $x = \frac{0}{0}$ and $y = \frac{0}{0}$.

That is, A and B are together at 12 o'clock, and since they travel at the same rate they will be together at all times.

INDETERMINATE EQUATIONS

448. While a problem that presents more unknown literal numbers than independent equations involving them is in general indeterminate (§ 214), yet frequently by the introduction of a condition or conditions not leading to equations, the number of values of the unknown numbers may be limited and these values algebraically determined. A common condition is that the results shall be positive integers.

1. Solve the equation $5x + 3y = 35$ in positive integers.

SOLUTION

Since x and y are positive integers, $5x$ must be equal to 5 or a multiple of 5, and $3y$ must be equal to 3 or a multiple of 3. Since the sum of these multiples is 35, if the multiples of 5 are subtracted from 35, one or more of the remainders will be a multiple of 3, if the problem is possible.

The only multiples of 5 that subtracted from 35 leave multiples of 3 are 5 and 4 times 5.

$\therefore x = 1$ or 4; whence, $y = 10$ or 5.

Or, since x must be a positive integer and by transposition $5x = 35 - 3y$, the values of x must be 1, 2, 3, 4, 5, or 6, if the equation is possible. Substituting these values of x in the given equation and rejecting all those that give negative or fractional values for y, the positive integral values are found to be $x = 1$ or 4, and $y = 10$ or 5.

2. Solve the equation $5x + 8y = 107$ in positive integers.

SOLUTION

$$5x + 8y = 107. \tag{1}$$

Dividing by 5, $$x + y + \frac{3y}{5} = 21 + \frac{2}{5}. \tag{2}$$

Collecting integral and fractional terms,

$$x + y - 21 = \frac{2 - 3y}{5}. \tag{3}$$

Since $x + y - 21$ is integral, $$\frac{2 - 3y}{5} = \text{an integer}. \tag{4}$$

If $\frac{2 - 3y}{5} = w$, an integer, then, $y = \frac{2 - 5w}{3}$, which is in the fractional form. To avoid this, the coefficient of y in the number placed equal to w should be made equal to *unity*. Since $\frac{2 - 3y}{5}$ is equal to an integer, any multiple of it is equal to an integer. Since 5 is contained in 3 times $-3y$, $-2y$ times with a remainder of y, multiplying (4) by 3,

$$\frac{6 - 9y}{5} = \text{an integer}$$

$$= 1 - 2y + \frac{1 + y}{5}. \tag{5}$$

Then, let $$\frac{1 + y}{5} = w, \text{ an integer}. \tag{6}$$

Solving for y, $$y = 5w - 1. \tag{7}$$

Substituting in (3), $$x = 23 - 8w. \tag{8}$$

Equations (7) and (8) are called the *general solution* of the given equation in integers.

To make y and x *positive* integers, it is evident from (7) that we must take $w > 0$; and from (8) that we must take $w < 3$.

Since w is an integer greater than 0 and less than 3, $w = 1$ or 2.

When $w = 1$, $x = 15$, $y = 4$;

when $w = 2$, $x = 7$, $y = 9$.

3. Determine whether the equation $10x + 15y = 53$ may be satisfied by integral values of x and y.

SOLUTION. — Dividing by 5, $2x + 3y = \frac{53}{5}$.

If x and y are integers, the first member is integral.

Since the first member is equal to the fraction $\frac{53}{5}$, it cannot be an integer. Hence, x and y cannot be integers at the same time; that is, the equation is not satisfied by integral values of x and y.

Solve the following equations in positive integers:

4. $5x + 3y = 49$.
5. $3x + 2y = 5$.
6. $2x + 7y = 48$.
7. $8x + 5y = 80$.
8. $12x + 5y = 61$.
9. $6x + 7y = 72$.
10. $5x + 9y = 75$.
11. $6x + 9y = 100$.

Find the least integral values of x and y in the following:

12. $2x = 9 + 3y$.
13. $5y = 2x + 7$.
14. $7x - 2y = 6$.
15. $5x - 3y = 1$.

16. Solve the equations $\left\{\begin{array}{l} x + y + z = 6 \\ 2x + y - z = 7 \end{array}\right\}$ in positive integers.

SOLUTION

$$x + y + z = 6. \quad (1)$$

$$2x + y - z = 7. \quad (2)$$

Adding, $3x + 2y = 13$. (3)

Solving (3) for positive integers, $x = 3$ and $y = 2$.

Substituting in (1), $z = 1$.

Solve the following equations in positive integers:

17. $\left\{\begin{array}{l} x + y + z = 8, \\ x - y + 2z = 6. \end{array}\right.$
18. $\left\{\begin{array}{l} 2x + 3y + z = 15, \\ 3x + y - z = 8. \end{array}\right.$
19. $\left\{\begin{array}{l} 3x + 2y = 17, \\ y + 2z = 14. \end{array}\right.$
20. $\left\{\begin{array}{l} y + z = 7, \\ 3x - z = 7. \end{array}\right.$

21. Separate 100 into two parts one of which is a multiple of 11, and the other a multiple of 6.

22. In what ways may a weight of 19 pounds be weighed with 5-pound and 2-pound weights?

23. A man has \$300 that he wishes to expend for cows and sheep. If cows cost \$45 apiece and sheep \$6 apiece, how many can he buy of each?

24. If 9 apples and 5 oranges together cost 52 cents, what is the cost of one of each?

25. A grocer sold two packages of sugar for $1.25. One package contained a certain number of pounds of 7-cent sugar, the other a certain number of pounds of 5-cent sugar. How many pounds were there in each package?

26. A man sold 9 animals — sheep, hogs, and cows — for $100. If he received $3 for a sheep, $6 for a hog, and $35 for a cow, how many of each did he sell?

27. A woman expended 93 cents for 14 yards of cloth, some at 5, some at 7, and the rest at 10 cents a yard. How many whole yards of each did she buy?

28. Divide 74 into three parts that shall give integral quotients when divided by 5, 6, and 7, respectively, the sum of which quotients shall be 12.

29. A purse contained 30 coins, consisting of half-dollars, quarters, and dimes How many coins of each kind were there, if their aggregate value was $6.50?

30. A man bought 100 animals for $99. There were pigs, sheep, and ducks. If he paid $6 for a pig, $4 for a sheep, and 50 cents for a duck, how many of each did he buy?

31. What is the least number that will contain 25 with a remainder of 1, and 33 with a remainder of 2?

32. Find the least number that divided by 10 and by 11 will leave remainders of 3 and 6, respectively.

33. What is the least number that will contain 2, 3, 4, 5, and 6, each with a remainder of 1, and 7 without a remainder?

34. A man selling eggs to a grocer took them out of his basket 4 at a time and there was 1 egg over. The grocer put them into a box 5 at a time and there were 3 over. Both lost the count; but knowing that there were between 6 and 7 dozen eggs, the grocer paid for $6\frac{1}{2}$ dozen. How many eggs did he lose?

35. Four boys have a pile of marbles. A throws away 1 and takes $\frac{1}{4}$ of the remainder; B throws away 1 and takes $\frac{1}{4}$ of the remainder; C throws away 1 and takes $\frac{1}{4}$ of the remainder; D throws away 1, and each boy takes $\frac{1}{4}$ of the remainder. At least how many marbles must have been in the pile, and how many does each boy now have?

MATHEMATICAL INDUCTION

449. Induction is generally understood as the process of inferring a general principle from particular instances. But mathematical induction differs in some respects from ordinary induction. *Mathematical Induction* is the process of proving a general principle by means of a known fact together with a conditional principle. The known fact is that the principle under consideration is true for as many of the first consecutive cases as we examine, and the conditional principle is that if it is true for the nth case it holds true for the $(n + 1)$th case.

This method of proof is illustrated by the following examples:

1. In the series of odd numbers 1, 3, 5, 7, ⋯, the first odd number $= 2(1) - 1$; the second odd number $= 2(2) - 1$; the third odd number $= 2(3) - 1$. From these particular instances it may be *inferred* that the nth odd number $= 2n - 1$, and it is now stated as a principle to be investigated that in the series 1, 3, 5, 7, ⋯, any odd number is 1 less than twice the number of the term.

Supposing that the nth odd number is $2n - 1$, by the law of the given series the $(n + 1)$th odd number is $(2n - 1) + 2$.

But, §§ 56, 85. $(2n - 1) + 2 = (2n + 2) - 1 = 2(n + 1) - 1$; that is, the principle holds for the $(n + 1)$th odd number on condition that it holds for the nth odd number.

Therefore, since the principle is true for the third odd number it holds for the fourth; since it is true for the fourth it holds for the fifth; and so on. Hence, the principle is true generally.

2. By trial $x - y$, $x^2 - y^2$, $x^3 - y^3$, $x^4 - y^4$, and $x^5 - y^5$ are each found to be divisible by $x - y$. From these special cases it may be *inferred*, and stated as a principle to be proved or disproved,

that the difference of *any* like powers of two numbers is divisible by the difference of the numbers. But the proved fact that $x - y$, $x^2 - y^2$, $\cdots$, $x^5 - y^5$ are each divisible by $x - y$ is no warrant for accepting without further inquiry the statement that $x^6 - y^6$, for example, is divisible by $x - y$. It is first necessary to know whether $x^6 - y^6$ can be expressed in terms of these numbers known to be exactly divisible by $x - y$. Since $x^6 - y^6 = x^6 - x^5y + x^5y - y^6 = x^5(x - y) + y(x^5 - y^5)$, each term of which has been proved to be divisible by $x - y$, $x^6 - y^6$ is divisible by $x - y$; and this illustrates the general proof.

For since $$x^{n+1} - y^{n+1} = x^{n+1} - x^ny + x^ny - y^{n+1}$$
$$= x^n(x - y) + y(x^n - y^n),$$

which is divisible by $x - y$ on condition that $x^n - y^n$ is divisible by $x - y$, it follows that $x^{n+1} - y^{n+1}$ is divisible by $x - y$ on condition that $x^n - y^n$ is divisible by $x - y$.

These two things then are proved:

First, *the difference of the same powers of any two numbers, up to and including the fifth powers, is divisible by the difference of the numbers.*

Second, *if the difference of the nth powers of any two numbers is divisible by the difference of the numbers, the difference of the next higher powers is divisible by the difference of the numbers.*

Therefore, since by actual division $x^5 - y^5$ has been proved to be divisible by $x - y$, $x^6 - y^6$ is divisible by $x - y$; since, as just proved, $x^6 - y^6$ is divisible by $x - y$, $x^7 - y^7$ is divisible by $x - y$; since, as just proved, $x^7 - y^7$ is divisible by $x - y$, $x^8 - y^8$ is divisible by $x - y$; etc.

Hence, for all positive integral values of n, however great, $x^n - y^n$ is divisible by $x - y$.

3. Let it be required to derive a formula for squaring any polynomial.

By actual multiplication, rearranging terms,

$$(a + b)^2 = a^2 + b^2 + 2\,ab; \tag{1}$$

$$(a + b + c)^2 = a^2 + b^2 + c^2 + 2\,ab + 2\,ac + 2\,bc; \tag{2}$$

$$(a + b + c + d)^2 = a^2 + b^2 + c^2 + d^2 + 2\,ab + 2\,ac + 2\,ad + 2\,bc + 2\,bd + 2\,cd. \tag{3}$$

It is proved, then, that the square of a polynomial of n terms, *provided that n is not greater than* 4, is equal to the sum of the squares of the terms, plus twice the product of each term by each term that follows it. It may be *inferred* that this principle is of general application, but without further proof it does not follow that it holds for polynomials of more than four terms.

Suppose, however, that the principle is true for a polynomial of n terms, n being any positive integer. If this is so, then,

$$\begin{aligned}(a_1 + a_2 + a_3 + \cdots + a_n)^2 = {} & a_1^2 + a_2^2 + a_3^2 + \cdots + a_n^2 \\ & + 2\,a_1(a_2 + a_3 + \cdots + a_n) + 2\,a_2(a_3 + a_4 + \cdots + a_n) \\ & + \cdots + 2\,a_{n-1}a_n \end{aligned} \tag{4}$$

is the formula for the square of a polynomial of n terms.

Since $(a_1 + a_2 + a_3 + \cdots + a_{n+1})^2 = [a_1 + (a_2 + a_3 + \cdots + a_{n+1})]^2$, by (1), $(a_1 + a_2 + a_3 \cdots + a_{n+1})^2$

$$= a_1^2 + (a_2 + a_3 + \cdots + a_{n+1})^2 + 2\,a_1(a_2 + a_3 + \cdots + a_{n+1});$$

if (4) is true,

$$\begin{aligned} = {} & a_1^2 + [a_2^2 + a_3^2 + \cdots + a_{n+1}^2 + 2\,a_2(a_3 + \cdots + a_{n+1}) \\ & + 2\,a_3(a_4 + \cdots + a_{n+1}) + \cdots + 2\,a_n a_{n+1}] \\ & + 2\,a_1(a_2 + a_3 + \cdots + a_{n+1}); \end{aligned}$$

rearranging,

$$\begin{aligned} = {} & a_1^2 + a_2^2 + a_3^2 + \cdots + a_{n+1}^2 + 2\,a_1(a_2 + a_3 + \cdots a_{n+1}) \\ & + 2\,a_2(a_3 + \cdots + a_{n+1}) + 2\,a_3(a_4 + \cdots + a_{n+1}) \\ & + \cdots + 2\,a_n a_{n+1}. \end{aligned} \tag{5}$$

But (5) expresses the same law for forming the square of a polynomial of $n+1$ terms that (4) expresses for forming the square of a polynomial of n terms. Hence, if the principle is true for polynomials of n terms, it is true for polynomials of $n+1$ terms.

By actual multiplication the principle has been proved true for polynomials of two, three, and four terms, respectively. Therefore, being true for polynomials of four terms, the principle holds true for polynomials of five terms; being true for polynomials of

five terms, it holds true for polynomials of six terms; and so on indefinitely.

Hence, the principle is universally true.

4. Let it be required to prove by mathematical induction that

$$1^2 + 2^2 + 3^2 + \cdots + n^2 = \tfrac{1}{6}\, n(n+1)(2n+1). \quad (1)$$

Supposing that (1) is true, then, Ax. 2,

$$1^2+2^2+3^2+\cdots+n^2+(n+1)^2 = \tfrac{1}{6}\, n(n+1)(2n+1) + (n+1)^2$$

§ 85,
$$= \tfrac{1}{6}(n+1)[n(2n+1) + 6(n+1)]$$
$$= \tfrac{1}{6}(n+1)(2n^2 + 7n + 6)$$
$$= \tfrac{1}{6}(n+1)(n+2)(2n+3)$$

§§ 56, 85,
$$= \tfrac{1}{6}(n+1)(\overline{n+1}+1)(2\overline{n+1}+1). \quad (2)$$

By comparing (2) with (1) it is seen that the sum of the squares of the first $(n+1)$ integers has the same form with respect to $(n+1)$ that the sum of the squares of the first n integers has with respect to n; that is, it has been proved that *if the formula is true for n terms, it is true for n + 1 terms.*

It can be verified by actual trial that the formula is true for 1, 2, 3, 4, $\cdots$ terms, as far as we please. Supposing that the verification stops with $n = 5$. By the above proof, since the formula is true for five terms it holds true for six terms; being true for six terms it holds true for seven terms; and so on indefinitely. Hence, the principle expressed by (1) is true for all integral values of n.

Examples

Prove by mathematical induction that:

1. $1^2 + 3^2 + 5^2 + \cdots$ to n terms $= \dfrac{n}{3}(2n-1)(2n+1)$.

2. $1 \cdot 3 + 2 \cdot 4 + 3 \cdot 5 + \cdots$ to n terms $= \dfrac{n}{6}(2n^2 + 9n + 7)$.

3. $1 \cdot 3 + 3 \cdot 5 + 5 \cdot 7 + \cdots$ to n terms $= \dfrac{n}{3}(4n^2 + 6n - 1)$.

4. $a + ar + ar^2 + \cdots$ to n terms $= \dfrac{a(1-r^n)}{1-r}$.

5. $x^{2n} - y^{2n}$ is divisible by $x + y$, n being a positive integer.

THE BINOMIAL THEOREM

450. The Binomial Theorem derives a formula by means of which any power of a binomial may be expanded into a series, whether the index of the power is positive or negative, integral or fractional.

POSITIVE INTEGRAL EXPONENTS

451. The powers of $(a+x)$, expanded in § 221, may be written

$$(a+x)^2 = a^2 + 2\,ax + \frac{2\cdot 1}{1\cdot 2}x^2.$$

$$(a+x)^3 = a^3 + 3\,a^2x + \frac{3\cdot 2}{1\cdot 2}ax^2 + \frac{3\cdot 2\cdot 1}{1\cdot 2\cdot 3}x^3.$$

$$(a+x)^4 = a^4 + 4\,a^3x + \frac{4\cdot 3}{1\cdot 2}a^2x^2 + \frac{4\cdot 3\cdot 2}{1\cdot 2\cdot 3}ax^3 + \frac{4\cdot 3\cdot 2\cdot 1}{1\cdot 2\cdot 3\cdot 4}x^4.$$

$$(a+x)^5 = a^5 + 5\,a^4x + \frac{5\cdot 4}{1\cdot 2}a^3x^2 + \frac{5\cdot 4\cdot 3}{1\cdot 2\cdot 3}a^2x^3 + \frac{5\cdot 4\cdot 3\cdot 2}{1\cdot 2\cdot 3\cdot 4}ax^4 + \frac{5\cdot 4\cdot 3\cdot 2\cdot 1}{1\cdot 2\cdot 3\cdot 4\cdot 5}x^5.$$

If the law of development revealed in the above is assumed to apply to the expansion of any power of any binomial, as the nth power of $(a+x)$, the result is

$$(a+x)^n = a^n + na^{n-1}x + \frac{n(n-1)}{1\cdot 2}a^{n-2}x^2 + \frac{n(n-1)(n-2)}{1\cdot 2\cdot 3}a^{n-3}x^3 + \cdots \quad (1)$$

From formula (1) it is evident that in any term,

1. The exponent of x is 1 less than the number of the term. Hence, the exponent of x in the $(r+1)$th term is r.

2. The exponent of a is n minus the exponent of x. Hence, the exponent of a in the $(r+1)$th term is $n-r$.

3. The number of factors in the numerator and in the denominator of the coefficient is 1 less than the number of the term.

Hence, the coefficient of the $(r+1)$th term has r factors in the numerator and r factors in the denominator.

Therefore, the $(r+1)$th, or *general term*, is

$$\frac{n(n-1)(n-2)\cdots \text{to } r \text{ factors}}{1\cdot 2\cdot 3\cdots \text{to } r \text{ factors}} a^{n-r}x^r. \qquad (2)$$

Since, when there are two factors in the numerator, the last is $n-1$, when there are three factors, $n-2$, when there are four factors, $n-3$, etc.; when there are r factors, the last is $n-(r-1)$, or $n-r+1$. Hence, (2) may be written

$$\frac{n(n-1)(n-2)\cdots(n-r+1)}{1\cdot 2\cdot 3\cdots r} a^{n-r}x^r. \qquad (3)$$

Hence, the full form of (1) is

$$(a+x)^n = a^n + na^{n-1}x + \frac{n(n-1)}{1\cdot 2}a^{n-2}x^2 + \frac{n(n-1)(n-2)}{1\cdot 2\cdot 3}a^{n-3}x^3 + \cdots$$
$$+ \frac{n(n-1)(n-2)\cdots(n-r+1)}{1\cdot 2\cdot 3\cdots r}a^{n-r}x^r + \cdots + x^n. \qquad (I)$$

This is called the **Binomial Formula**.

452. Since it has already been proved, by actual multiplication, that the binomial formula is true for the second, third, fourth, and fifth powers of a binomial, it remains to discover whether it is true for powers higher than the fifth.

If the binomial theorem, when *assumed* to be true for the nth power, can be *proved* to be true for the $(n+1)$th power, it will then have been proved to be true for the sixth power, since it is known to be true for the fifth power; also for the seventh power, being true for the sixth power; and in like manner for each succeeding power.

It then remains to prove that if (I) is true for the nth power, it will hold true for the $(n+1)$th power.

To find the expansion of $(a+x)^{n+1}$ (I) may be multiplied by $a+x$. But since the $(r+1)$th term of the product will be the algebraic sum of a times the $(r+1)$th term of $(a+x)^n$ and x times the rth term of $(a+x)^n$, (I) should be prepared for multiplication

by writing also the rth term, obtained from the $(r+1)$th term by substituting r for $r+1$, or $r-1$ for r. Then (I) is written

$$(a+x)^n = a^n + na^{n-1}x + \frac{n(n-1)}{1\cdot 2}a^{n-2}x^2 + \cdots$$
$$+ \frac{n(n-1)(n-2)\cdots(n-r+2)}{1\cdot 2\cdot 3\cdots(r-1)}a^{n-r+1}x^{r-1}$$
$$+ \frac{n(n-1)(n-2)\cdots(n-r+2)(n-r+1)}{1\cdot 2\cdot 3\cdots(r-1)r}a^{n-r}x^r + \cdots + x^n.$$

Multiplying both members by $a+x$,

$$(a+x)^{n+1} = a^{n+1} + n\left|a^n x + \frac{n(n-1)}{1\cdot 2}\right|a^{n-1}x^2 + \cdots$$
$$+1\left| \quad + \quad n\right| \quad + \cdots$$
$$+ \frac{n(n-1)(n-2)\cdots(n-r+2)(n-r+1)}{1\cdot 2\cdot 3\cdots(r-1)r}\Big|a^{n-r+1}x^r$$
$$+ \quad \frac{n(n-1)(n-2)\cdots(n-r+2)}{1\cdot 2\cdot 3\cdots(r-1)}\Big| \quad + \cdots + x^{n+1}$$
$$= a^{n+1} + (n+1)a^n x + \left[\frac{n(n-1)}{2} + n\right]a^{n-1}x^2 + \cdots$$
$$+\left(\frac{n-r+1}{r}+1\right)\left(\frac{n(n-1)(n-2)\cdots(n-r+2)}{1\cdot 2\cdot 3\cdots(r-1)}\right)a^{n-r+1}x^r + \cdots + x^{n+1}$$
$$= a^{n+1} + (n+1)a^n x + \frac{(n+1)n}{1\cdot 2}a^{n-1}x^2 + \cdots$$
$$+\left(\frac{n+1}{r}\right)\left(\frac{n(n-1)(n-2)\cdots(n-r+2)}{1\cdot 2\cdot 3\cdots(r-1)}\right)a^{n-r+1}x^r + \cdots + x^{n+1}.$$

That is,

$$(a+x)^{n+1} = a^{n+1} + (n+1)a^n x + \frac{(n+1)n}{1\cdot 2}a^{n-1}x^2 + \cdots$$
$$+ \frac{(n+1)n(n-1)\cdots(n-r+2)}{1\cdot 2\cdot 3\cdots r}a^{n-r+1}x^r + \cdots + x^{n+1}. \quad \text{(II)}$$

Since upon comparison it may be seen that (II) and (I) have the same form, $n+1$ in one taking the place of n in the other, (II) and (I) must express the same law of formation.

Therefore, if the formula is true for the nth power, it holds true for the $(n+1)$th power.

Hence, the binomial formula is true for any positive integral exponent.

This method of proof is a proof by *Mathematical Induction.*

453. If $-x$ is substituted for x in (I), the terms that contain the odd powers of $-x$ will be negative, and the terms that contain the even powers will be positive. Therefore,

$$(a-x)^n = a^n - na^{n-1}x + \frac{n(n-1)}{1\cdot 2}a^{n-2}x^2 - \cdots. \qquad \text{(III)}$$

If $a = 1$, (I) becomes

$$(1+x)^n = 1 + nx + \frac{n(n-1)}{1\cdot 2}x^2 + \frac{n(n-1)(n-2)}{1\cdot 2\cdot 3}x^3 + \cdots. \qquad \text{(IV)}$$

454. From (I) it is seen that the last factor in the numerator of the coefficient is n for the 2d term, $n-1$ for the 3d term, $n-2$ for the 4th term, $n-(n-2)$, or 2, for the nth term, and $n-(n-1)$, or 1, for the $(n+1)$th term; and that the coefficient of the $(n+2)$th term, and that of each succeeding term, contains the factor $n-n$, or 0, and therefore reduces to 0. Hence,

When n is a positive integer, the series formed by expanding $(a+x)^n$ is finite and has $n+1$ terms.

455. By formula (I), when n is a positive integer,

$$(a+x)^n = a^n + na^{n-1}x + \frac{n(n-1)}{1\cdot 2}a^{n-2}x^2 + \cdots + \frac{n(n-1)\cdots 2\cdot 1}{1\cdot 2\cdots(n-1)n}x^n.$$

$$(x+a)^n = x^n + nx^{n-1}a + \frac{n(n-1)}{1\cdot 2}x^{n-2}a^2 + \cdots + \frac{n(n-1)\cdots 2\cdot 1}{1\cdot 2\cdots(n-1)n}a^n.$$

A comparison of the two series shows that:

The coefficients of the latter half of the expansion of $(a+x)^n$, when n is a positive integer, are the same as those of the first half, written in the reverse order.

EXAMPLES

1. Expand $(3a-2b)^4$.

SOLUTION. — Substituting $3a$ for a, $2b$ for x, and 4 for n in (III),

$$(3a-2b)^4 = (3a)^4 - 4(3a)^3(2b) + \frac{4\cdot 3}{1\cdot 2}(3a)^2(2b)^2 - \frac{4\cdot 3\cdot 2}{1\cdot 2\cdot 3}(3a)(2b)^3 + \frac{4\cdot 3\cdot 2\cdot 1}{1\cdot 2\cdot 3\cdot 4}(2b)^4$$

$$= 81a^4 - 216a^3b + 216a^2b^2 - 96ab^3 + 16b^4.$$

2. Expand $\left(\frac{b}{2}+bx\right)^5$.

SOLUTION

Since $\left(\frac{b}{2}+bx\right)^5=\left[\frac{b}{2}(1+2x)\right]^5=\frac{b^5}{32}(1+2x)^5$,

$(1+2x)^5$ may be expanded by (IV), and the result multiplied by $\frac{b^5}{32}$.

Expand:

3. $(b-n)^7$.

4. $(1+a^{-1})^4$.

5. $(2-3x)^6$.

6. $(x^2-x)^8$.

7. $(x+x^{-1})^6$.

8. $(2a+\sqrt{x})^3$.

9. $(a+a\sqrt{a})^4$.

10. $\left(1+\frac{2}{x^2}\right)^5$.

11. $\left(\frac{a}{x}-\frac{x}{a}\right)^5$.

12. $\left(\frac{1}{x}-\frac{a}{y}\right)^3$.

13. $(\sqrt[3]{a^2}+\sqrt[4]{b^3})^3$.

14. $(2\sqrt{2}-\sqrt[3]{3})^6$.

15. $\left(\sqrt{2}+\frac{1}{\sqrt{x}}\right)^3$.

16. $(x^{\frac{n-1}{n}}-x^{\frac{1}{n}})^4$.

17. $(ax^{-2}-b\sqrt{x})^6$.

18. $\left(\frac{\sqrt{a}}{\sqrt[3]{b}}-\frac{\sqrt{b}}{\sqrt{a^3}}\right)^6$.

19. $\left(\frac{x}{y}\sqrt{\frac{x}{y}}+\frac{2}{3}\sqrt{\frac{2}{3}}\right)^3$.

456. To find any term.

Any term of the expansion of a power of a binomial may be obtained by substitution in (2) or (3), § 451.

In the expansion of a power of the difference of two numbers, as $(a-x)^n$, since the exponent of x in the $(r+1)$th term is r, the sign of the general term is $+$ if r is *even*, and $-$ if r is *odd*.

EXAMPLES

1. Find the 12th term of $(a-b)^{14}$.

SOLUTION

$$\text{12th term}=\frac{14\cdot13\cdot12\cdot11\cdot10\cdot9\cdot8\cdot7\cdot6\cdot5\cdot4}{1\cdot2\cdot3\cdot4\cdot5\cdot6\cdot7\cdot8\cdot9\cdot10\cdot11}a^3(-b)^{11}$$

$$=-\frac{14\cdot13\cdot12}{1\cdot2\cdot3}a^3b^{11}=-364\,a^3b^{11}.$$

OR

By § 455, since there are 15 terms, the coefficient of the 12th term, or the 4th term from the end, is equal to that of the 4th term from the beginning.

$$\therefore\ \text{12th term}=-\frac{14\cdot13\cdot12}{1\cdot2\cdot3}a^3b^{11}=-364\,a^3b^{11}.$$

2. In the expansion of $(x^2+2x)^{11}$, find the term containing x^{15}.

SOLUTION.— Since $(x^2+2x)^{11} = \left[x^2\left(1+\frac{2}{x}\right)\right]^{11} = x^{22}\left(1+\frac{2}{x}\right)^{11}$, every term of the series expanded from $\left(1+\frac{2}{x}\right)^{11}$ will be multiplied by x^{22}.

Hence, the term sought is that which contains $\left(\frac{2}{x}\right)^7$, or $\frac{2^7}{x^7}$; that is, the $(7+1)$th, or 8th term.

$$8\text{th term} = x^{22}\,\frac{11\cdot 10\cdot 9\cdot 8}{1\cdot 2\cdot 3\cdot 4}\left(\frac{2}{x}\right)^7 = 42240\,x^{15}.$$

3. Find the 4th term of $(a+2)^{10}$.

4. Find the 4th term of $(x-3y)^{12}$.

5. Find the 8th term of $(x+y)^{10}$.

6. Find the 5th term of $(x-2y)^{12}$.

7. Find the 3d term of $(a^2-a^{\ 2})^4$.

8. Find the 20th term of $(1+x)^{24}$.

9. Find the 16th term of $(1-2x)^{20}$.

10. Find the middle term of $(a+3b)^6$.

11. Find the 6th term of $\left(x+\frac{1}{x}\right)^{10}$.

12. Find the middle term of $\left(\frac{x}{y}-\frac{y}{x}\right)^{10}$.

13. Find the two middle terms of $\left(\frac{a}{b}-\frac{b}{a}\right)^9$.

14. Find the coefficient of a^9 in the expansion of $(a^3+a)^5$.

457. The formula given for the expansion of $(a+x)^n$ is true, under certain conditions, for all commensurable values of n, whether they are positive, negative, integral, or fractional, and the student will, therefore, be able to expand such expressions; but the proof for negative and fractional exponents and the discussion of the conditions under which the expansion for these exponents gives the true value of $(a+x)^n$ will be deferred. (See pages 520–523.)

In the expansion of $(a+x)^n$, if n is negative or fractional, none of the binomial coefficients, $\frac{n(n-1)}{1\cdot 2}$, $\frac{n(n-1)(n-2)}{1\cdot 2\cdot 3}$, etc., can become 0; consequently, when such exponents are given, the series developed can have no end.

Examples

1. Expand $(1-y)^{-1}$ and find its $(r+1)$th term.

Solution. — Substituting 1 for a, y for x, and -1 for n in (III),

$$(1-y)^{-1} = 1^{-1} - (-1)\,1^{-2}y + \frac{-1(-2)}{1\cdot 2}1^{-3}y^2 - \frac{-1(-2)(-3)}{1\cdot 2\cdot 3}1^{-4}y^3 + \cdots$$
$$= 1 + y + y^2 + y^3 + \cdots.$$

The $(r+1)$th term is evidently y^r.

Since $(1-y)^{-1} = \dfrac{1}{1-y}$, the above expansion of $(1-y)^{-1}$ may be verified by division.

2. Expand $(a+x)^{\frac{1}{2}}$ to five terms and find the 10th term.

Expand to four terms:

3. $(a+b)^{\frac{2}{3}}$.

4. $(a+b)^{-\frac{1}{2}}$.

5. $(a-b)^{\frac{1}{2}}$.

6. $\sqrt[4]{(a-b)^3}$.

7. $\dfrac{1}{\sqrt[4]{(a-b)^3}}$.

8. $\sqrt{4+x}$.

9. $\sqrt{(9-x)^3}$.

10. $(a^{\frac{2}{3}} - x^{-1})^{\frac{3}{2}}$.

11. $(a^{\frac{1}{2}} - x^{\frac{1}{3}})^{-6}$.

12. $\left(\dfrac{1}{\sqrt{a} - \sqrt[3]{x}}\right)^3$.

13. $(1+x)^{\frac{2}{5}}$.

14. $(1+a)^{-1}$.

15. $(1-a)^{-1}$.

16. $(1-x)^{-2}$.

17. $(1-x)^{-3}$.

18. Find the $(r+1)$th term of $(a+x)^{\frac{1}{2}}$.

19. Show that

$$(1-x-x^2)^{-1} = 1 + x + 2x^2 + 3x^3 + 5x^4 + 8x^5 + 13x^6 + 21x^7 + \cdots.$$

20. Find the square root of 24 to three decimal places.

Solution. $\sqrt{24} = (24)^{\frac{1}{2}} = (25-1)^{\frac{1}{2}} = (25)^{\frac{1}{2}}(1 - {}_{25}^{1})^{\frac{1}{2}} = 5(1 - {}_{25}^{1})^{\frac{1}{2}}$.

$$5\left(1 - \frac{1}{25}\right)^{\frac{1}{2}}$$
$$= 5\left[1 - \frac{1}{2}\left(\frac{1}{25}\right) + \frac{\frac{1}{2}(-\frac{1}{2})}{1\cdot 2}\left(\frac{1}{25}\right)^2 - \frac{\frac{1}{2}(-\frac{1}{2})(-\frac{3}{2})}{1\cdot 2\cdot 3}\left(\frac{1}{25}\right)^3 + \cdots\right]$$
$$= 5 - .1 - .001 - .00002 - \cdots = 4.89898 - = 4.899, \text{ nearly.}$$

Find the values of the following to three decimal places:

21. $\sqrt{5}$.

22. $\sqrt{17}$.

23. $\sqrt{26}$.

24. $\sqrt[3]{25}$.

25. $\sqrt[3]{9}$.

26. $\sqrt[5]{30}$.

LOGARITHMS

458. 1. What power of 3 is 9? 27? 81? 243? 729?

2. What power of 5 is 25? 125? 625? 3125? 5? 1? $\frac{1}{5}$?

3. Express 100 as a power of 10; 1000 as a power of 10; 10,000 as a power of 10; 10 as a power of 10; 1 as a power of 10.

459. The exponent of the power to which a fixed number called the *Base* must be raised in order to produce a given number is called the **Logarithm** of the given number.

When 10 is the base, the logarithm of 100 is 2, for $100 = 10^2$; the logarithm of 1000 is 3, for $1000 = 10^3$; the logarithm of 10,000 is 4, for $10{,}000 = 10^4$.

460. When a is the base, x the exponent, and m the given number, x is the logarithm of the number m to the base a.

It is written $\log_a m = x$.

When the base is 10, it is not indicated.

Thus, the logarithm of 100 to the base 10 is 2. It is written $\log 100 = 2$.

461. Logarithms may be computed with any arithmetical number except unity as a base, but the base of the **Common** or **Briggs System** of logarithms is 10.

Since $10^0 = 1$, the logarithm of 1 is 0.
Since $10^1 = 10$, the logarithm of 10 is 1.
Since $10^2 = 100$, the logarithm of 100 is 2.
Since $10^3 = 1000$, the logarithm of 1000 is 3.
Since $10^{-1} = \frac{1}{10}$, the logarithm of .1 is -1.
Since $10^{-2} = \frac{1}{100}$, the logarithm of .01 is -2.

462. It is evident, then, that the logarithm of any number between 1 and 10 is a number greater than 0 and less than 1. For example, the logarithm of 4 is approximately 0.6021. Again, the logarithm of any number between 10 and 100 is a number greater than 1 and less than 2. For example, the logarithm of 50 is approximately 1.6990.

Most logarithms are incommensurable numbers. All the laws established for commensurable exponents apply also to incommensurable exponents. The proofs for incommensurable exponents are given in § 436.

463. The integral part of a logarithm is called the **Characteristic**; the fractional or decimal part, the **Mantissa.**

In $\log 50 = 1.6990$, the characteristic is 1 and the mantissa .6990.

464. The following examples will illustrate the *characteristic* and *mantissa*, and their significance:

$\log 4580 = 3.6609$; that is, $4580 = 10^{3.6609}$.
$\log 458.0 = 2.6609$; that is, $458.0 = 10^{2.6609}$.
$\log 45.80 = 1.6609$; that is, $45.80 = 10^{1.6609}$.
$\log 4.580 = 0.6609$; that is, $4.580 = 10^{0.6609}$.
$\log .4580 = \bar{1}.6609$; that is, $.4580 = 10^{-1+.6609}$.
$\log .0458 = \bar{2}.6609$; that is, $.0458 = 10^{-2+.6609}$.
$\log .00458 = \bar{3}.6609$; that is, $.00458 = 10^{-3+.6609}$.

From the above examples it is evident that:

465. Principles. — 1. *The characteristic of the logarithm of a number greater than* 1 *is positive and* 1 *less than the number of digits in its integral part.*

2. *The characteristic of the logarithm of a decimal is negative and numerically* 1 *greater than the number of ciphers immediately following the decimal point.*

466. To avoid writing a negative characteristic before a positive mantissa, it is customary to add 10 or some multiple of 10 to the negative characteristic, and to indicate that the number added is to be subtracted from the whole logarithm.

Thus, 1.6609 is written $9.6609 - 10$; $\bar{2}.3010$ is written $8.3010 - 10$; $\bar{1}4.9031$ is written $6.9031 - 20$; $\bar{2}\bar{8}.8062$ is written $2.8062 - 30$; etc.

467. It is evident, also, from the examples, that in the logarithms of numbers expressed by the same figures in the same order, the decimal parts, or *mantissas*, are the same, and that the logarithms differ only in their *characteristics.* Hence, tables of logarithms contain only the *mantissas.*

468. The table of logarithms on the two following pages gives the decimal parts, or mantissas, correct to four places, for the common logarithms of all numbers from 1 to 1000.

469. To find the logarithm of a number.

EXAMPLES

1. Find the logarithm of 765.

SOLUTION. — In the following table the letter **N** designates a vertical column of numbers from 10 to 99 inclusive, and also a horizontal row of figures **0, 1, 2, 3, 4, 5, 6, 7, 8, 9.** The first two figures of 765 appear as the number 76 in the vertical column marked **N** on page 419, and the third figure 5 in the horizontal row marked **N**.

In the same horizontal row as 76 are found the mantissas of the logarithms of the numbers 760, 761, 762, 763, 764, 765, etc. The mantissa of the logarithm of 765 is found in this row under **5**, the third figure of 765. It is 8837 and means .8837.

By Prin. 1, the characteristic of the logarithm of 765 is 2.

Hence, the logarithm of 765 is 2.8837.

2. Find the logarithm of 4.

SOLUTION. — Although the numbers in the table appear to begin with 100, the table really includes all numbers from 1 to 1000, since numbers expressed by less than three figures may be expressed by three figures by adding decimal ciphers. Since $4 = 4.00$, and since, § 467, the mantissa of the logarithm of 4.00 is the same as that of 400, which is .6021, the mantissa of the logarithm of 4 is .6021.

By Prin. 1, the characteristic of the logarithm of 4 is 0.

Therefore, the logarithm of 4 is 0.6021.

Verify the following from the table:

3. $\log 10 = 1.0000$.
4. $\log 100 = 2.0000$.
5. $\log 110 = 2.0414$.
6. $\log 2 = 0.3010$.
7. $\log 20 = 1.3010$.
8. $\log 200 = 2.3010$.
9. $\log .2 = 9.3010 - 10$.
10. $\log 542 = 2.7340$.
11. $\log 345 = 2.5378$.
12. $\log 5.07 = 0.7050$.
13. $\log 78.5 = 1.8949$.
14. $\log .981 = 9.9917 - 10$.

Table of Common Logarithms

N	0	1	2	3	4	5	6	7	8	9
10	0000	0043	0086	0128	0170	0212	0253	0294	0334	0374
11	0414	0453	0492	0531	0569	0607	0645	0682	0719	0755
12	0792	0828	0864	0899	0934	0969	1004	1038	1072	1106
13	1139	1173	1206	1239	1271	1303	1335	1367	1399	1430
14	1461	1492	1523	1553	1584	1614	1644	1673	1703	1732
15	1761	1790	1818	1847	1875	1903	1931	1959	1987	2014
16	2041	2068	2095	2122	2148	2175	2201	2227	2253	2279
17	2304	2330	2355	2380	2405	2430	2455	2480	2504	2529
18	2553	2577	2601	2625	2648	2672	2695	2718	2742	2765
19	2788	2810	2833	2856	2878	2900	2923	2945	2967	2989
20	3010	3032	3054	3075	3096	3118	3139	3160	3181	3201
21	3222	3243	3263	3284	3304	3324	3345	3365	3385	3404
22	3424	3444	3464	3483	3502	3522	3541	3560	3579	3598
23	3617	3636	3655	3674	3692	3711	3729	3747	3766	3784
24	3802	3820	3838	3856	3874	3892	3909	3927	3945	3962
25	3979	3997	4014	4031	4048	4065	4082	4099	4116	4133
26	4150	4166	4183	4200	4216	4232	4249	4265	4281	4298
27	4314	4330	4346	4362	4378	4393	4409	4425	4440	4456
28	4472	4487	4502	4518	4533	4548	4564	4579	4594	4609
29	4624	4639	4654	4669	4683	4698	4713	4728	4742	4757
30	4771	4786	4800	4814	4829	4843	4857	4871	4886	4900
31	4914	4928	4942	4955	4969	4983	4997	5011	5024	5038
32	5051	5065	5079	5092	5105	5119	5132	5145	5159	5172
33	5185	5198	5211	5224	5237	5250	5263	5276	5289	5302
34	5315	5328	5340	5353	5366	5378	5391	5403	5416	5428
35	5441	5453	5465	5478	5490	5502	5514	5527	5539	5551
36	5563	5575	5587	5599	5611	5623	5635	5647	5658	5670
37	5682	5694	5705	5717	5729	5740	5752	5763	5775	5786
38	5798	5809	5821	5832	5843	5855	5866	5877	5888	5899
39	5911	5922	5933	5944	5955	5966	5977	5988	5999	6010
40	6021	6031	6042	6053	6064	6075	6085	6096	6107	6117
41	6128	6138	6149	6160	6170	6180	6191	6201	6212	6222
42	6232	6243	6253	6263	6274	6284	6294	6304	6314	6325
43	6335	6345	6355	6365	6375	6385	6395	6405	6415	6425
44	6435	6444	6454	6464	6474	6484	6493	6503	6513	6522
45	6532	6542	6551	6561	6571	6580	6590	6599	6609	6618
46	6628	6637	6646	6656	6665	6675	6684	6693	6702	6712
47	6721	6730	6739	6749	6758	6767	6776	6785	6794	6803
48	6812	6821	6830	6839	6848	6857	6866	6875	6884	6893
49	6902	6911	6920	6928	6937	6946	6955	6964	6972	6981
50	6990	6998	7007	7016	7024	7033	7042	7050	7059	7067
51	7076	7084	7093	7101	7110	7118	7126	7135	7143	7152
52	7160	7168	7177	7185	7193	7202	7210	7218	7226	7235
53	7243	7251	7259	7267	7275	7284	7292	7300	7308	7316
54	7324	7332	7340	7348	7356	7364	7372	7380	7388	7396
N	0	1	2	3	4	5	6	7	8	9

Table of Common Logarithms

N	0	1	2	3	4	5	6	7	8	9
55	7404	7412	7419	7427	7435	7443	7451	7459	7466	7474
56	7482	7490	7497	7505	7513	7520	7528	7536	7543	7551
57	7559	7566	7574	7582	7589	7597	7604	7612	7619	7627
58	7634	7642	7649	7657	7664	7672	7679	7686	7694	7701
59	7709	7716	7723	7731	7738	7745	7752	7760	7767	7774
60	7782	7789	7796	7803	7810	7818	7825	7832	7839	7846
61	7853	7860	7868	7875	7882	7889	7896	7903	7910	7917
62	7924	7931	7938	7945	7952	7959	7966	7973	7980	7987
63	7993	8000	8007	8014	8021	8028	8035	8041	8048	8055
64	8062	8069	8075	8082	8089	8096	8102	8109	8116	8122
65	8129	8136	8142	8149	8156	8162	8169	8176	8182	8189
66	8195	8202	8209	8215	8222	8228	8235	8241	8248	8254
67	8261	8267	8274	8280	8287	8293	8299	8306	8312	8319
68	8325	8331	8338	8344	8351	8357	8363	8370	8376	8382
69	8388	8395	8401	8407	8414	8420	8426	8432	8439	8445
70	8451	8457	8463	8470	8476	8482	8488	8494	8500	8506
71	8513	8519	8525	8531	8537	8543	8549	8555	8561	8567
72	8573	8579	8585	8591	8597	8603	8609	8615	8621	8627
73	8633	8639	8645	8651	8657	8663	8669	8675	8681	8686
74	8692	8698	8704	8710	8716	8722	8727	8733	8739	8745
75	8751	8756	8762	8768	8774	8779	8785	8791	8797	8802
76	8808	8814	8820	8825	8831	8837	8842	8848	8854	8859
77	8865	8871	8876	8882	8887	8893	8899	8904	8910	8915
78	8921	8927	8932	8938	8943	8949	8954	8960	8965	8971
79	8976	8982	8987	8993	8998	9004	9009	9015	9020	9025
80	9031	9036	9042	9047	9053	9058	9063	9069	9074	9079
81	9085	9090	9096	9101	9106	9112	9117	9122	9128	9133
82	9138	9143	9149	9154	9159	9165	9170	9175	9180	9186
83	9191	9196	9201	9206	9212	9217	9222	9227	9232	9238
84	9243	9248	9253	9258	9263	9269	9274	9279	9284	9289
85	9294	9299	9304	9309	9315	9320	9325	9330	9335	9340
86	9345	9350	9355	9360	9365	9370	9375	9380	9385	9390
87	9395	9400	9405	9410	9415	9420	9425	9430	9435	9440
88	9445	9450	9455	9460	9465	9469	9474	9479	9484	9489
89	9494	9499	9504	9509	9513	9518	9523	9528	9533	9538
90	9542	9547	9552	9557	9562	9566	9571	9576	9581	9586
91	9590	9595	9600	9605	9609	9614	9619	9624	9628	9633
92	9638	9643	9647	9652	9657	9661	9666	9671	9675	9680
93	9685	9689	9694	9699	9703	9708	9713	9717	9722	9727
94	9731	9736	9741	9745	9750	9754	9759	9763	9768	9773
95	9777	9782	9786	9791	9795	9800	9805	9809	9814	9818
96	9823	9827	9832	9836	9841	9845	9850	9854	9859	9863
97	9868	9872	9877	9881	9886	9890	9894	9899	9903	9908
98	9912	9917	9921	9926	9930	9934	9939	9943	9948	9952
99	9956	9961	9965	9969	9974	9978	9983	9987	9991	9996
N	0	1	2	3	4	5	6	7	8	9

15. Find the logarithm of 6253.

Solution. — Since the table contains the mantissas not only of the logarithms of numbers expressed by three figures, but also of logarithms expressed by four figures when the last figure is 0, the mantissa of the logarithm of 625 is first found, since, § 467, it is also the mantissa of the logarithm of 6250. It is found to be .7959.

The next greater mantissa found in the table is .7966, which is the mantissa of the logarithm of 626 or of 6260. Since the numbers 6250 and 6260 differ by 10, and the mantissas of their logarithms differ by 7 ten-thousandths, it may be assumed as sufficiently accurate that each increase of 1 unit, as 6250 increases to 6260, produces a corresponding increase of .1 of 7 ten-thousandths in the mantissa of the logarithm. Consequently, 3 added to 6250 will add .3 of 7 ten-thousandths, or 2 ten-thousandths, to the mantissa of the logarithm of 6250 for the mantissa of the logarithm of 6253.

Hence, the mantissa of the logarithm of 6253 is .7959 + .0002, or .7961.

Since the number is an integer expressed by 4 digits, the characteristic is 3 (Prin. 1).

Therefore, the logarithm of 6253 is 3.7961.

Note. — The difference between two successive mantissas in the table is called the *Tabular Difference.*

Find the logarithm of

16. 1054.
17. 1272.
18. .0165.
19. 1906.
20. 21.09.
21. 3.060.
22. 441.1.
23. .7854.
24. .09095.
25. .10125.
26. 54.675.
27. .09885.

470. To find a number whose logarithm is given.

Examples

1. Find the number whose logarithm is 0.9472.

Solution. — The two mantissas adjacent to the given mantissa are .9469 and .9474, corresponding to the numbers 8.85 and 8.86, since the given characteristic is 0. The given mantissa is 3 ten-thousandths greater than the mantissa of the logarithm of 8.85, and the mantissa of the logarithm of 8.86 is 5 ten-thousandths greater than the mantissa of the logarithm of 8.85.

Since the numbers 8.85 and 8.86 differ by 1 one-hundredth, and the mantissas of their logarithms differ by 5 ten-thousandths, it may be assumed as sufficiently accurate that each increase of 1 ten-thousandth in the mantissa is produced by an increase of $\frac{1}{5}$ of 1 one-hundredth in the number. Conse-

quently, an increase of 3 ten-thousandths in the mantissa is produced by an increase of $\frac{3}{5}$ of 1 one-hundredth, or .006, in the number.

Hence, the number whose logarithm is 0.9472 is 8.856.

2. Find the number whose logarithm is $9.4180 - 10$.

SOLUTION. — Given mantissa, .4180
Mantissa next less, .4166; figures corresponding, 261.

Difference, 14
Tabular difference, 17)14(.8

Hence, the figures corresponding to the given mantissa are 2618.

Since the characteristic is $9 - 10$, or -1, the number is a decimal with no ciphers immediately following the decimal point.

Hence, the number whose logarithm is $9.4180 - 10$ is .2618.

Find the number corresponding to

3. 0.3010.	8. 3.9545.	13. $9.3685 - 10$.
4. 1.6021.	9. 0.8794.	14. $8.9932 - 10$.
5. 2.9031.	10. 2.9371.	15. $8.9535 - 10$.
6. 1.6669.	11. 0.8294.	16. $7.7168 - 10$.
7. 2.7971.	12. 1.9039.	17. $6.7016 - 10$.

471. Multiplication by logarithms.

Since logarithms are the exponents of the powers to which a constant number is to be raised, it follows that:

472. PRINCIPLE. — *The logarithm of the product of two or more numbers is equal to the sum of their logarithms;* that is,

To any base, $\log (mn) = \log m + \log n$.

The above principle may be established as follows:

Let $\log_a m = x$ and $\log_a n = y$, a being any base.

It is to be proved that $\log_a (mn) = x + y$.

§ 459, $a^x = m$,

and $a^y = n$.

Multiplying, §§ 240, 436, $a^{x+y} = mn$.

Hence, § 460, $\log_a (mn) = x + y$

$= \log_a m + \log_a n$.

EXAMPLES

1. Multiply .0381 by 77.

SOLUTION

Prin., $\log (.0381 \times 77) = \log .0381 + \log 77.$

$\log .0381 = 8.5809 - 10$

$\log. 77 = 1.8865$

Sum of logs $= 10.4674 - 10$

$= 0.4674$

$0.4674 = \log 2.934.$

$\therefore .0381 \times 77 = 2.934.$

NOTE. — Three figures of a number corresponding to a logarithm may be found from this table with absolute accuracy, and in most cases the fourth will be correct. In finding the logarithms of numbers or the numbers corresponding to logarithms, allowance should be made for the figures after the fourth, whenever they express .5 or more.

Multiply:

2. 3.8 by 56.
3. 72 by 39.
4. 8.5 by 6.2.
5. 1.64 by 35.
6. 2.26 by 85.
7. 7.25 by 240.
8. 3272 by 75.
9. .892 by .805.
10. 1.414 by 2.829.
11. 42.37 by .236.
12. 2912 by .7281.
13. 289 by .7854.

473. Division by logarithms.

Since the logarithms of two numbers to a common base represent exponents of the same number, it follows that:

474. PRINCIPLE. — *The logarithm of the quotient of two numbers is equal to the logarithm of the dividend minus the logarithm of the divisor;* that is,

To any base, $\log (m \div n) = \log m - \log n.$

The above principle may be established as follows:

Let $\log_a m = x$ and $\log_a n = y$, a being any base.

It is to be proved that $\log_a (m \div n) = x - y.$

§ 459, $a^x = m$ and $a^y = n.$

Dividing, §§ 248, 436, $a^{x-y} = m \div n.$

Hence, § 460, $\log_a (m \div n) = x - y$

$= \log_a m - \log_a n.$

EXAMPLES

1. Divide .00468 by 75.

SOLUTION

Prin., $\log (.00468 \div 75) = \log .00468 - \log 75.$

$\log .00468 = 7.6702 - 10$

$\log 75 = 1.8751$

Difference of logs $= 5.7951 - 10$

$5.7951 - 10 = \log .00006239.$

$\therefore .00468 \div 75 = .00006239.$

2. Divide 12.4 by 16.

SOLUTION

Prin., $\log (12.4 \div 16) = \log 12.4 - \log 16.$

$\log 12.4 = 1.0934 = 11.0934 - 10$

$\log 16 = 1.2041$

Difference of logs $= 9.8893 - 10$

$9.8893 - 10 = \log .775.$

$\therefore 12.4 \div 16 = .775.$

SUGGESTION. — The positive part of the logarithm of the dividend may be made to exceed that of the divisor, if necessary, by adding $10 - 10$ or $20 - 20$, etc.

Divide:

3. 3025 by 55.
4. 4096 by 32.
5. 3249 by 57.
6. .2601 by .68.
7. 3950 by .250.
8. 10 by 3.14.
9. .6911 by .7854.
10. 2.816 by 22.5.
11. 4 by .00521.
12. 26 by .06771.
13. 1 by 40.
14. 1 by 75.
15. 200 by .5236.
16. 300 by 17.32.
17. .220 by .3183.

475. Extended operations in multiplication and division.

Since dividing by a number is equivalent to multiplying by its reciprocal, for every operation of division an operation of multiplication may be substituted. In extended operations in multiplication and division with the aid of logarithms, the latter method of dividing is the more convenient.

476. The logarithm of the reciprocal of a number is called the **Cologarithm** of the number.

The cologarithm of 100 is equal to the logarithm of $\frac{1}{100}$, which is -2.
The cologarithm of 100 is -2 is abbreviated to colog $100 = -2$.

477. Since the logarithm of 1 is 0 and the logarithm of a quotient is obtained by subtracting the logarithm of the divisor from that of the dividend, it is evident that the cologarithm of a number is 0 minus the logarithm of the number, or the logarithm of the number with the sign of the logarithm changed; that is, if $\log_a m = x$, then, $\operatorname{colog}_a m = -x$.

Since subtracting a number is equivalent to adding it with its sign changed, it follows that:

478. PRINCIPLE. — *Instead of subtracting the logarithm of the divisor from the logarithm of the dividend, the cologarithm of the divisor may be added to the logarithm of the dividend;* that is,

To any base, $\log (m \div n) = \log m + \operatorname{colog} n$.

EXAMPLES

1. Find the value of $\dfrac{.063 \times 58.5 \times 799}{458 \times 15.6 \times .029}$ by logarithms.

SOLUTION

$$\frac{.063 \times 58.5 \times 799}{458 \times 15.6 \times .029} = .063 \times 58.5 \times 799 \times \frac{1}{458} \times \frac{1}{15.6} \times \frac{1}{.029}.$$

$$\begin{aligned}
\log .063 &= 8.7993 - 10 \\
\log 58.5 &= 1.7672 \\
\log 799 &= 2.9025 \\
\operatorname{colog} 458 &= 7.3391 - 10 \\
\operatorname{colog} 15.6 &= 8.8069 - 10 \\
\operatorname{colog} .029 &= 1.5376 \\
\hline
\log \text{ of result} &= 31.1526 - 30 \\
&= 1.1526. \\
\therefore \text{ result} &= 14.21.
\end{aligned}$$

Find the value of

2. $\dfrac{110 \times 3.1 \times .653}{33 \times 7.854 \times 1.7}$.

3. $\dfrac{6000 \times 5 \times 29}{.7854 \times 25000 \times 81.7}$.

4. $\dfrac{3.516 \times 485 \times 65}{3.33 \times 17 \times 18 \times 73}$.

5. $\dfrac{15 \times .37 \times 26.16}{11 \times 8 \times .18 \times 6.67}$.

6. $\dfrac{78 \times 52 \times 1605}{338 \times 767 \times 431}$.

7. $\dfrac{.5 \times .315 \times 428}{.317 \times .973 \times 43.7}$.

479. Involution by logarithms.

Since logarithms are simply exponents, it follows that:

480. PRINCIPLE. — *The logarithm of a power of a number is equal to the logarithm of the number multiplied by the index of the power;* that is,

To any base, $\log m^n = n \log m$.

The above principle may be established as follows:

Let $\log_a m = x$, and let n be any number, a being any base.
It is to be proved that $\log_a m^n = nx$.

§ 459, $a^x = m$.

Raising each member to the nth power,

Ax. 6 and §§ 249, 436, $a^{nx} = m^n$.

Hence, § 460, $\log_a m^n = nx = n \log_a m$.

EXAMPLES

1. Find the value of $.25^2$.

SOLUTION

Prin., $\log .25^2 = 2 \log .25$.

$\log .25 = 9.3979 - 10$.

$2 \log .25 = 18.7958 - 20$

$= 8.7958 - 10$.

$8.7958 - 10 = \log .06249$.

$\therefore .25^2 = .06249$.

NOTE. — By actual multiplication it is found that $.25^2 = .0625$, whereas the result obtained by the use of the table is .06249.

Also, by multiplication, $18^2 = 324$, whereas by the use of the table it is found to be 324.1. Such inaccuracies must be expected when a four-place table is used.

Find by logarithms the value of

2. 7^2.	7. $.78^2$.	12. 4.07^3.	17. $(\frac{3}{20})^2$.
3. 11^2.	8. 8.05^2.	13. $.543^3$.	18. $(\frac{1}{7})^3$.
4. 47^2.	9. 8.33^2.	14. 7^4.	19. $(\frac{128}{1738})^2$.
5. 4.9^2.	10. 6.61^3.	15. 1.02^5.	20. $(\frac{675}{4121})^3$.
6. 5.2^2.	11. $.714^2$.	16. 1.738^3.	21. $(\frac{1}{248})^4$.

481. Evolution by logarithms.

Since logarithms are simply exponents, it follows that:

482. PRINCIPLE. — *The logarithm of the root of a number is equal to the logarithm of the number divided by the index of the required root;* that is,

To any base, $$\log \sqrt[n]{m} = \frac{\log m}{n}.$$

The above principle may be established as follows:

Let $\log_a m = x$, and let n be any number, a being any base.

It is to be proved that $\log_a \sqrt[n]{m} = x \div n$.

§ 459, $$a^x = m.$$

Taking the nth root of each member,

Ax. 7 and §§ 250, 436, $$a^{x \div n} = \sqrt[n]{m}.$$

Hence, § 460, $$\log_a \sqrt[n]{m} = x \div n = \frac{\log_a m}{n}.$$

EXAMPLES

1. Find the square root of .1296 by logarithms.

SOLUTION

Prin., $$\log \sqrt{.1296} = \tfrac{1}{2} \log .1296.$$

$$\log .1296 = 9.1126 - 10.$$

$$2)\overline{19.1126 - 20}$$

$$9.5563 - 10$$

$$9.5563 - 10 = \log .360.$$

$$\therefore \sqrt{.1296} = .36.$$

Find by logarithms the value of

2. $225^{\frac{1}{2}}$.
3. $12.25^{\frac{1}{2}}$.
4. $.2025^{\frac{1}{2}}$.
5. $324^{\frac{1}{2}}$.
6. $.512^{\frac{1}{3}}$.
7. $.1181^{\frac{1}{2}}$.
8. $3.375^{\frac{1}{3}}$.
9. $1331^{\frac{1}{3}}$.
10. $1024^{\frac{7}{10}}$.
11. $.6724^{\frac{1}{2}}$.
12. $5.929^{\frac{1}{2}}$.
13. $.4624^{\frac{1}{2}}$.
14. $1.4641^{\frac{1}{4}}$.
15. $.00032^{\frac{1}{5}}$.
16. $\sqrt{2}$.
17. $\sqrt{3}$.
18. $\sqrt{5}$.
19. $\sqrt{6}$.
20. $\sqrt[3]{2}$.
21. $\sqrt[4]{4}$.
22. $\sqrt[3]{3}$.
23. $\sqrt[5]{2}$.
24. $\sqrt[3]{.027}$.
25. $\sqrt{30\frac{1}{4}}$.
26. $\sqrt{.90}$.
27. $\sqrt{.52}$.
28. $\sqrt[5]{.032}$.
29. $\sqrt{.025}$.

Simplify the following:

30. $\dfrac{176}{15 \times 3.1416}$.
31. $\dfrac{100^2}{48 \times 64 \times 11}$.
32. $\dfrac{52^2 \times 300}{12 \times .31225 \times 400000}$.
33. $\sqrt{\dfrac{400}{55 \times 3.1416}}$.
34. $50 \times \dfrac{2^{3.5}}{8^{1.63}}$.
35. $\dfrac{14.5\sqrt[3]{1.6}}{11}$.
36. $\sqrt{\dfrac{.434 \times 96^4}{64 \times 1500}}$.
37. $\dfrac{.32 \times 5000 \times 18}{3.14 \times .1222 \times 8}$.
38. $\dfrac{11 \times 2.63 \times 4.263}{48 \times 3.263}$.
39. $\sqrt{\dfrac{3500}{1.06^5}}$.
40. $2^{\frac{1}{2}} \times (\frac{1}{2})^{\frac{2}{3}} \times \sqrt[3]{\frac{3}{2}} \times \sqrt{.1}$.

483. Solution of exponential equations.

Exponential equations, or equations that involve unknown exponents, are solved by the aid of the principle that, in any system, equal numbers have equal logarithms.

In simple cases the solution of such equations may be performed by inspection, but in general it is necessary to use a table of logarithms.

EXAMPLES

1. Find the value of x in the equation $2^x = 32\sqrt{2}$.

SOLUTION

$$2^x = 32\sqrt{2} = 2^5 2^{\frac{1}{2}} = 2^{5\frac{1}{2}};$$

therefore, $\log(2^x) = \log(2^{5\frac{1}{2}})$,

or $x \log 2 = 5\frac{1}{2} \log 2$.

$\therefore\ x = 5\frac{1}{2}$.

2. Find the value of x in the equation $2^x = 48$.

SOLUTION

Taking the logarithm of each member,

$$x \log 2 = \log 48.$$

$$\therefore\ x = \frac{\log 48}{\log 2}$$

$$= \frac{1.6812}{0.3010} = 5.58+.$$

3. Find the value of x in the equation $3^{2x} - 20 \cdot 3^x + 99 = 0$.

SOLUTION

Factoring the given equation,

$$(3^x - 9)(3^x - 11) = 0.$$

$$\therefore\ 3^x = 9 \text{ or } 11.$$

Solving the equation $3^x = 9$ by inspection, since $9 = 3^2$,

$$x = 2.$$

Taking the logarithm of each member of $3^x = 11$,

$$x \log 3 = \log 11.$$

$$\therefore\ x = \frac{\log 11}{\log 3} = \frac{1.0414}{0.4771} = 2.18+.$$

Therefore, the value of x is either 2 or 2.18+.

4. Given $x^2 = y^3$ and $x^y = y^x$, to find x and y.

SOLUTION

Raising the members of the first equation to the xth power, and those of the second equation to the 3d power,

$$x^{2x} = y^{3x},$$

and $x^{3y} = y^{3x}$.

Hence, by inspection, $2x = 3y$.

Squaring, since $4x^2 = 4y^3$, $4x^2 = 9y^2 = 4y^3$.

$$\therefore\ y = 0 \text{ or } \tfrac{9}{4},$$

and $x = 0$ or $\tfrac{27}{8}$.

5. Given $3^x = 2y$ and $2^x = y$, to find x and y.

SOLUTION

$$3^x = 2y. \tag{1}$$

$$2^x = y. \tag{2}$$

Dividing (1) by (2), $(1.5)^x = 2.$

$\therefore x \log 1.5 = \log 2.$

Hence, by tables, $x = \dfrac{\log 2}{\log 1.5} = \dfrac{0.3010}{0.1761}.$ (3)

By logarithms, $\log x = 0.2328\,;$ (4)

whence, by tables, $x = 1.709.$ (5)

From (2), $\log y = x \log 2.$

$\therefore \log \log y = \log x + \log \log 2$

by (4) and tables, $= 0.2328 + \bar{1}.4786$

$= \bar{1}.7114.$

Hence, by tables, $\log y = 0.5145\,;$

whence, $y = 3.270.$

Solve the following:

6. $3^x = 81.$

7. $4^x = 10.$

8. $2^x = 80.$

9. $3^{x^2} = 9^{2x}.$

10. $2^{x^2} = 512.$

11. $(2^x)^2 = 256.$

12. $3^{2x} - 36 \cdot 3^x + 243 = 0.$

13. $\log \log x = \log 2.$

14. $\begin{cases} 3^x = 2y, \\ 4^x = 20y. \end{cases}$

15. $2^{3^y} = 512.$

16. $5^{x^6} = 625.$

17. $\begin{cases} 2^{x+y} = 6, \\ 2^{x+1} = 3^y. \end{cases}$

18. $\begin{cases} 4^{x+y} = 32, \\ 2^{2x-y} = 4. \end{cases}$

19. $\begin{cases} 2^x = y, \\ x = 1 + \log y. \end{cases}$

484. Logarithms applied to the solution of problems in compound interest and annuities.

1. What is the amount of \$1 for 1 year at 6%? By what must the amount for 1 year be multiplied to find the amount for 2 years at 6% compound interest?

2. By what must the amount for 2 years be multiplied to obtain the amount for 3 years, compound interest? By what must the amount for 3 years be multiplied to obtain the amount for 4 years, compound interest?

3. Since the amount of any principal at 6% compound interest for 1 year is 1.06 times the principal; for two years, 1.06×1.06, or 1.06^2 times the principal; for 3 years, $1.06 \times 1.06 \times 1.06$, or 1.06^3 times the principal, etc., what will be the amount (A) of any principal (P) for n years at any rate per cent (r)?

FORMULA. $$A = P(1 + r)^n.$$

Expressing the formula by logarithms,

$$\log A = \log P + n \log(1 + r). \tag{1}$$

$$\therefore \log P = \log A - n \log(1 + r); \tag{2}$$

also $$\log(1 + r) = \frac{\log A - \log P}{n}, \tag{3}$$

and $$n = \frac{\log A - \log P}{\log(1 + r)}. \tag{4}$$

EXAMPLES

1. What is the amount of \$475 for 10 years at 6% compound interest?

SOLUTION

$$A = P(1 + r)^n.$$

$$\log 475 = 2.6767$$

$$\log 1.06^{10} = 0.2530$$

$$\log A = 2.9297$$

$$\therefore A = \$850.60.$$

2. What will be the amount of \$225 loaned for 5 years at 8% compound interest?

3. Find the amount of \$700 loaned for 5 years at 6% compound interest.

4. Find the amount of \$400 for 10 years at 3% compound interest.

5. Find the amount of \$1200 for 20 years at 4% compound interest.

6. What principal will amount to \$1000 in 10 years at 5% compound interest?

7. What sum of money invested at 4 % compound interest, payable semiannually, will amount to $ 743 in 10 years?

8. What principal loaned at 4 % compound interest will amount to $ 1500 in 10 years?

9. What sum of money invested at 4 % compound interest from a child's birth until he is 21 years old will yield $ 1000?

10. In what time will $ 800 amount to $ 1834.50, if put at compound interest at 5 %?

11. What is the rate per cent when $ 300 loaned at compound interest for 6 years amounts to $ 402?

12. A man agreed to loan $ 1000 at 6 % compound interest for a time long enough for the principal to double itself. How long was the money at interest?

485. A sum of money to be paid periodically for a given number of years, during the life of a person, or forever, is called an **Annuity.**

The payments may be made once a year, or twice, or four times a year, etc.

Interest is allowed upon deferred payments.

486. To find the amount of an annuity left unpaid for a given number of years, compound interest being allowed.

1. If an annuity of a dollars is not paid at the end of the first year, how much is then due?

2. Upon what sum will compound interest be computed for the second year? What will be the amount of that sum, if the rate is r? What will be the whole sum due at the end of the *second* year? *Ans.* $a + a(1 + r)$.

3. Upon what sum will compound interest be computed for the third year? What will be the amount of that sum at the given rate? *Ans.* $a(1 + r) + a(1 + r)^2$.

What will be the whole sum due at the end of the *third* year? *Ans.* $a + a(1 + r) + a(1 + r)^2$.

4. What will be the whole sum due at the end of the *fourth* year? What will be the whole sum due at the end of the nth year?

487. Let a represent the annuity, n the number of years, r the rate, and A the whole amount due at the end of the nth year.

Then,

$$A = a + a(1+r) + a(1+r)^2 + a(1+r)^3 + \cdots + a(1+r)^{n-1}$$
$$= a\{1 + (1+r) + (1+r)^2 + (1+r)^3 + \cdots + (1+r)^{n-1}\}.$$

Since the terms of A form a geometrical progression in which $1+r$ is the ratio, § 370, the sum of the series is

$$A = \frac{a}{r}[(1+r)^n - 1].$$

488. Sometimes annuities, drawing interest, are not payable until after a certain number of years. It is often necessary, therefore, to find the present value of such annuities.

489. A sum that will amount to the value of an annuity, if put at interest at the given rate for the given time, is called the **Present Value** of the annuity.

490. 1. If P denotes the present value of an annuity due in n years, allowing r % compound interest, to what sum will P be equal in that time at the given rate? *Ans.* $P(1+r)^n$.

2. Since the amount of the present value put at interest for the given time at the given rate is equal to the amount of the annuity for the same time and rate, equate the two sums and find the value of P.

$$P(1+r)^n = \frac{a}{r}[(1+r)^n - 1].$$

$$\therefore P = \frac{a}{r} \cdot \frac{(1+r)^n - 1}{(1+r)^n}$$

$$= \frac{a}{r}\left(1 - \frac{1}{(1+r)^n}\right).$$

EXAMPLES

1. What will be the amount of an annuity of $100 remaining unpaid for 10 years at 6 % compound interest?

SOLUTION. $$A = \frac{a}{r}[(1+r)^n - 1].$$

By logarithms, $1.06^{10} = 1.7904$

$\therefore 1.06^{10} - 1 = .7904$

$\log 100 = 2.0000$

$\log .7904 = 9.8978 - 10$

$\operatorname{colog} .06 = 1.2218$

$\therefore \log A = 3.1196$

Hence, $A = \$1317$, the amount of the annuity.

2. What is the present value of an annuity of $100 to continue 10 years at 6 % compound interest?

SOLUTION. $$P = \frac{a}{r} \cdot \frac{(1+r)^n - 1}{(1+r)^n}.$$

By logarithms, $1.06^{10} = 1.7904$

$\therefore 1.06^{10} - 1 = .7904$

$\log 100 = 2.0000$

$\log .7904 = 9.8978 - 10$

$\operatorname{colog} .06 = 1.2218$

$\operatorname{colog} 1.06^{10} = 9.7470 - 10$

$\therefore \log P = 2.8666$

Hence, $P = \$735.50$, the p. v. of the annuity.

3. To what sum will an annuity of $25 amount in 20 years at 4 % compound interest?

4. What is the present value of an annuity of $300 for 5 years at 4 % compound interest?

5. What will be the amount of an annuity of $17.76 remaining unpaid for 25 years at $3\frac{1}{2}$ % compound interest?

6. What is the present value of an annuity of $1000 to continue 20 years, allowing compound interest at $4\frac{1}{2}$ %?

7. What annuity will amount to $1000 in 10 years at 5 % compound interest?

PERMUTATIONS AND COMBINATIONS

491. All the different orders in which it is possible to arrange a given number of things, taking either some or all of them at a time, are called the **Permutations** of the things.

Thus, the permutations of the letters a and b are ab, ba; the permutations of three letters, two at a time, are ab, ac, ba, bc, ca, cb.

492. All the different selections that it is possible to make from a given number of things, taking either some or all of them at a time, without regard to the order in which they are placed, are called the **Combinations** of the things.

Thus, while the permutations of three letters, two at a time, are ab and ba, bc and cb, and ca and ac, their *combinations*, two at a time, are ab (or ba), bc (or cb), and ac (or ca); again, the six permutations of three letters among themselves, viz., abc, acb, bca, bac, cab, and cba, form but one combination, abc (or acb, or bca, or bac, or cab, or cba).

It is evident that there can be but one combination of any number of things taken all at a time.

493. **Notation.** — The symbol for the number of permutations of n different things, taken r at a time, is P^n_r; of n different things, taken n at a time, or all together, P^n_n.

The symbol for the number of combinations of n different things, taken r at a time, is C^n_r; of n different things, taken n at a time, or all together, is C^n_n.

494. The product of the successive natural numbers from 1 to n, or from n to 1, inclusive, is called **factorial n**, written $\underline{|n}$.

$\underline{|5} = 1 \times 2 \times 3 \times 4 \times 5$, or $5 \times 4 \times 3 \times 2 \times 1$;

$\underline{|n} = 1 \cdot 2 \cdot 3 \cdots (n-2)(n-1)n$, or $n(n-1)(n-2)(n-3) \cdots 3 \cdot 2 \cdot 1$.

$\underline{|n}$ is sometimes written $n\,!$

495. To find the number of permutations of n different things taken r at a time.

Since the permutations of the letters a, b, and c, taken 2 at a time, are ab and ac, ba and bc, ca and cb, formed by writing after each of the letters a, b, and c, each of the other letters in turn, the number of permutations of 3 different things taken 2 at a time is 3×2.

The number of permutations of n letters taken 2 at a time may be found by associating with each of the n letters each of the $n-1$ other letters. Consequently, the number of permutations of n different things taken 2 at a time is $n(n-1)$.

Since the number of permutations of n letters 2 at a time is $n(n-1)$, if the letters are taken 3 at a time there will be $n-2$ letters each of which may be associated with each of the $n(n-1)$ permutations of letters taken 2 at a time. Hence, the number of permutations of n different things taken 3 at a time is

$$n(n-1)(n-2).$$

PRINCIPLE 1. – *The number of permutations of n different things taken r at a time is equal to the continued product of the natural numbers from n to $n-(r-1)$ inclusive. The number of factors is r.* That is,

$$P_r^n = n(n-1)(n-2)\cdots \text{to } r \text{ factors}$$
$$= n(n-1)(n-2)\cdots(n-r+1). \qquad \text{(I)}$$

Multiplying and dividing the second member of (I) by $(n-r)(n-r-1)(n-r-2)\cdots 2 \cdot 1$; that is, by $\underline{|n-r}$,

$$P_r^n = \frac{\underline{|n}}{\underline{|n-r}}. \qquad \text{(II)}$$

It will usually be more convenient to employ formula (I) in solving numerical examples; but when simply algebraic results are desired, formula (II) will be preferable.

496. When $r = n$, that is, when the things are taken all together, the last, or nth, factor in (I) is 1. Consequently,

PRINCIPLE 2. – *The number of permutations of n different things taken all at a time is equal to $\underline{|n}$.* That is,

$$P_n^n = n(n-1)(n-2)\cdots \text{to } n \text{ factors} = \underline{|n}. \qquad \text{(III)}$$

Examples

1. Three boys enter a car in which there are 5 empty seats. In how many ways may they choose seats?

Solution. — Since the first boy may choose any one of 5 seats; and since, after he has chosen one of them, for each seat that he may choose, the second boy may choose any one of the 4 seats remaining, the greatest possible number of ways in which two of the boys may be seated is 5×4.

Again, since after each choice of seats made by two of the boys there will be left to the third boy a choice of one of the 3 seats remaining, the number of ways in which all may choose seats is $5 \times 4 \times 3$, or 60.

Or, by (I), $P_r^n = n(n-1)(n-2)\cdots(n-r+1)$,

$$P_3^5 = 5 \times 4 \times 3 = 60.$$

2. How many numbers between 100 and 1000 can be expressed by the figures 1, 3, 5?

Solution. — Since the numbers lie between 100 and 1000, each must be expressed by three figures. Hence, the number of numbers between 100 and 1000 that can be expressed by the figures 1, 3, and 5 is the same as the number of permutations of these 3 figures taken 3 at a time.

Since, Prin. 2, $P_3^3 = \underline{|3} = 3 \cdot 2 \cdot 1 = 6$,

there are six such numbers. They are 135, 153, 351, 315, 513, and 531.

3. How many permutations can be made of the letters in the word *Albany*, each beginning with capital A?

Solution. — Since A is to be prefixed to each permutation of the 5 other letters, the required number is

$$P_5^5 = 5 \times 4 \times 3 \times 2 \times 1 = 120.$$

4. In how many orders may 4 persons sit on a bench?

5. How many permutations may be made of the letters in the word *steam*?

6. If 10 athletes run a race, in how many ways may the first and second prizes be awarded?

7. In how many different orders may the colors violet, indigo, blue, green, yellow, orange, and red be arranged?

8. There are five routes to the top of a mountain. In how many ways may a person go up and return by a different way?

497. To find the number of combinations of n different things taken r at a time.

Since two letters, as a and b, have two permutations, ab and ba, but form only one combination, the number of combinations of n letters taken 2 at a time is one half the number of permutations of n letters taken 2 at a time.

Since three letters taken 3 at a time have 3×2 permutations, but form only one combination, the number of combinations of n letters taken 3 at a time is obtained by dividing the number of permutations of n letters taken 3 at a time by 3×2.

Since four letters taken 4 at a time have $\lfloor 4$ permutations but form only one combination, to obtain the number of combinations of n letters taken 4 at a time, the number of permutations of n letters taken 4 at a time must be divided by $\lfloor 4$.

Hence it follows that:

PRINCIPLE 3. — *The number of combinations of n different things taken r at a time is equal to the number of permutations of n different things taken r at a time, divided by the number of permutations of r different things taken all together.* That is,

$$C_r^n = P_r^n \div P_r^r = \frac{n(n-1)(n-2)\cdots \text{to } r \text{ factors}}{r(r-1)(r-2)\cdots \text{to } r \text{ factors}}$$

$$= \frac{n(n-1)(n-2)\cdots(n-r+1)}{1 \cdot 2 \cdot 3 \cdots r} \quad \text{(IV)}$$

or, by (II),

$$= \frac{\lfloor n}{\lfloor n-r} \div \lfloor r$$

$$= \frac{\lfloor n}{\lfloor r \, \lfloor n-r}. \quad \text{(V)}$$

498. Since for every combination of r things out of n different things there is left a combination of $n - r$ things, it follows that:

PRINCIPLE 4. — *The number of combinations of n different things is the same when taken n − r at a time as when taken r at a time.* That is,

$$C_{n-r}^n = C_r^n = \frac{\lfloor n}{\lfloor r \, \lfloor n-r}. \quad \text{(VI)}$$

The above principle may be established as follows:

By (V), $$C_r^n = \frac{\lfloor n}{\lfloor r \lfloor n - r} \tag{1}$$

Substituting $n - r$ for r, $$C_{n-r}^n = \frac{\lfloor n}{\underline{n - r} \lfloor n - (n - r)}$$

$$= \frac{\lfloor n}{\lfloor n - r \lfloor r} \tag{2}$$

Since the second members of (1) and (2) are identical, $C_{n-r}^n = C_r^n$.

The above principle is useful in abridging numerical computations.

Thus, the number of combinations of 18 things taken 16 at a time is computed by Prin. 3 as follows:

$$C_{16}^{18} = \frac{18 \cdot 17 \cdot 16 \cdot 15 \cdot 14 \cdot 13 \cdot 12 \cdot 11 \cdot 10 \cdot 9 \cdot 8 \cdot 7 \cdot 6 \cdot 5 \cdot 4 \cdot 3}{1 \cdot 2 \cdot 3 \cdot 4 \cdot 5 \cdot 6 \cdot 7 \cdot 8 \cdot 9 \cdot 10 \cdot 11 \cdot 12 \cdot 13 \cdot 14 \cdot 15 \cdot 16} = 153.$$

By Prin. 4, the computation is abridged as follows:

$$C_{16}^{18} = C_2^{18} = \frac{18 \cdot 17}{1 \cdot 2} = 153.$$

Examples

1. A man has 6 friends and wishes to invite 4 of them to dinner. In how many ways may he select his guests?

Solution. — Since each party, or combination, of 4 guests could be arranged, or permuted, in $\lfloor 4$ ways, the number of combinations must be $\frac{1}{\lfloor 4}$ of the number of permutations of 6 things taken 4 at a time.

Hence, the number of ways is

$$C_4^6 = P_4^6 \div P_4^4 = \frac{6 \times 5 \times 4 \times 3}{1 \times 2 \times 3 \times 4} = 15.$$

2. A man and his wife wish to invite 11 of their friends, 6 men and 5 women, to dinner, but find that they can entertain only 8 guests. In how many ways may they invite 4 men and 4 women?

Solution. — As in the previous example, 4 men may be selected from 6 men in 15 ways, and in a similar manner 4 women may be selected from 5 women in 5 ways.

Since, when any set of 4 men has been invited, the party of 8 may be completed by inviting any one of 5 sets of 4 women, the whole number of different parties that it is possible to invite is 15×5, or 75. That is,

$$C_4^6 \times C_4^5 = \frac{6 \cdot 5 \cdot 4 \cdot 3}{1 \cdot 2 \cdot 3 \cdot 4} \times \frac{5 \cdot 4 \cdot 3 \cdot 2}{1 \cdot 2 \cdot 3 \cdot 4} = 75.$$

3. In how many ways may a baseball nine be selected from 12 candidates?

4. Find the value of C_2^{10}; of C_8^{12}; of C_{22}^{25}.

5. How many different combinations of 5 cards can be formed from 52 cards?

6. Which is the greater, C_8^{10} or C_3^{10}? C_4^{10} or C_5^{10}?

7. From 11 Republicans and 10 Democrats how many different committees can be selected composed of 6 Republicans and 5 Democrats?

8. A man forgets the combination of figures and letters by which his safe is opened. If they are arranged on the circumferences of three wheels, one bearing the numbers 0 to 9 inclusive, another the letters A to M inclusive, and the third the letters N to Z inclusive, what is the greatest number of trials he may have to make to open the safe?

9. From 6 consonants and 4 vowels how many words may be formed each consisting of 4 consonants and 2 vowels, if any arrangement of the letters is considered a word?

SOLUTION. — The number of combinations is $C_4^6 \times C_2^4$; and since by permuting the letters of each combination $\lfloor 6$ words can be formed, the number of words is $C_4^6 \times C_2^4 \times \lfloor 6$.

10. In an omnibus that will seat 8 persons on a side there are seated 4 persons, 3 on one side and 1 on the other. In how many ways may 12 more persons be seated?

SOLUTION. — Since 5 persons must take seats on one side and 7 persons on the other, 12 persons are to be divided into two classes, 5 and 7. The number of these combinations, formula (V), is

$$C_5^{12}, \text{ or } C_7^{12}, = \frac{\lfloor 12}{\lfloor 5 \lfloor 7}.$$

Since each combination of 5 may have $\lfloor 5$ permutations of the 5 that compose it, and each combination of 7 may have $\lfloor 7$ permutations each of which may be associated with each of the $\lfloor 5$ permutations, the required number of ways is $C_5^{12} \times P_5^5 \times P_7^7$,

or
$$\frac{\lfloor 12}{\lfloor 5 \lfloor 7} \times \lfloor 5 \times \lfloor 7 = \lfloor 12.$$

Or, since there are 12 persons to be seated in 12 seats, the number of ways is $P_{12}^{12} = \lfloor 12.$

11. Out of 20 consonants and 5 vowels how many words containing 3 consonants and 3 vowels can be formed, if any arrangement of the letters is considered a word?

12. How many different sums can be paid with a cent, a half-dime, a dime, a quarter, and a dollar?

13. From 5 boys and 5 girls how many committees of 6 can be selected so as to contain at least 2 boys?

14. A company of a soldiers is joined by another company of b soldiers. In how many ways is it possible to leave c of them to garrison the fort, dividing the rest into two scouting parties, one of m, the other of n soldiers?

15. If $C_5^n = 2\,C_2^n$, find the number of things.

SOLUTION. — By formula (V), $C_5^n = \dfrac{\lfloor n}{\lfloor 5 \lfloor n-5}$ and $C_2^n = \dfrac{\lfloor n}{\lfloor 2 \lfloor n-2}$.

Since $C_5^n = 2\,C_2^n$,

$$\frac{\lfloor n}{\lfloor 5 \lfloor n-5} = \frac{2 \lfloor n}{\lfloor 2 \lfloor n-2}.$$

$$\frac{1}{\lfloor 5 \lfloor n-5} = \frac{1}{\lfloor n-2}.$$

$$\therefore \lfloor n-2 = \lfloor 5 \lfloor n-5.$$

$$\frac{\lfloor n-2}{\lfloor n-5}, \text{ or } (n-2)(n-3)(n-4) = 5 \times 4 \times 3 \times 2 \times 1,$$

or $$(n-2)(n-3)(n-4) = 6 \times 5 \times 4.$$

$$\therefore n = 8.$$

16. If $3\,C_3^n = 2\,C_4^{n+1}$, find n, C_3^n, and C_4^{n+1}.

499. To find the number of circular permutations of n different things taken n at a time.

Suppose four letters a, b, c, d, placed in a fixed position around a circle in the order $abcd$. Since the arrangement may be read $abcd$, $bcda$, $cdab$, or $dabc$, without changing the direction in which the letters are read, it is evident that each circular permutation of 4 letters taken all together takes the place of 4 permutations of the letters all together.

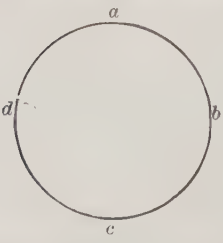

That is, the number of *circular* permutations of 4 things taken all together is one fourth of the number of permutations of 4 things taken all together.

The whole number of permutations of n things taken all together is $\underline{|n}$. But if the n things are arranged around a circle, n of these permutations may be obtained from any circular permutation without disturbing the relative positions of the things.

Hence,

PRINCIPLE 5. — *The number of circular permutations of n things taken all together is equal to* $\frac{1}{n}$ *th of the whole number of their permutations taken all together.* That is,

$$P_n^n(\text{circular}) = \frac{\underline{|n}}{n} = \underline{|n-1}. \qquad \text{(VII)}$$

EXAMPLES

1. In how many orders may 6 persons seat themselves around a table?

2. In how many orders may 4 gentlemen and their wives seat themselves around a table?

3. In how many orders may 4 gentlemen and their wives seat themselves around a table so that each gentleman sits opposite his wife?

4. In how many orders may 4 gentlemen and their wives seat themselves around a table so that each gentleman sits opposite a lady?

5. In how many ways may the colors violet, indigo, blue, green, yellow, orange, and red be arranged on a disk, the colors radiating from the center?

500. To find the number of permutations of *n* things taken *n* at a time when they are not all different.

If, in the permutation (a, b, c, d, e, f, g), the letters b, d, and g are permuted while the other letters remain fixed in position, the resulting number of permutations will be the same as the number of permutations of b, d, and g. If b, d, and g are different things, the number of permutations resulting will be $\underline{|3}$; but if b, d, and g become alike, there will be but 1 permutation.

That is, the number of permutations of any number of things

when three of them are alike is equal to the number of permutations of the things, considered as all different, divided by $\lfloor 3$; if 4 of the things are alike, by $\lfloor 4$; if p of the things are alike, by $\lfloor p$.

Hence, it follows that:

PRINCIPLE 6. — *The number of permutations of n things, taken all together, when p of them are alike, is* $\frac{\lfloor n}{\lfloor p}$.

Since, if q of the remaining $n - p$ different things become alike, but different from the p like things, the number of permutations must be divided by $\lfloor q$; if r others become alike, by $\lfloor r$; etc.: it follows that:

PRINCIPLE 7. — *The number of permutations of n things, taken all together, when p of them are of one kind, q of another, r of another, etc., is* $\frac{\lfloor n}{\lfloor p \lfloor q \lfloor r \cdots}$.

EXAMPLES

1. How many permutations may be made with the letters of the word *Mississippi* taken all together?

SOLUTION. — The number is $\frac{\lfloor 11}{\lfloor 4 \lfloor 4 \lfloor 2} = 34650$.

2. How many permutations may be made with the letters of each of the following words, all at a time in each case: *zoölogy, coefficient, ecclesiastical, divisibility?*

3. How many permutations may be made with the letters represented in the product $a^4b^5c^2$ written out in full?

501. To find the total number of combinations of n different things.

The number of combinations of n different things taken successively 1, 2, 3, $\cdots$ n at a time is called the *total* number of combinations of n things.

The total number of combinations of 2 things is

$$C_1^2 + C_2^2 = 2 + 1 = 3, \text{ or } 2^2 - 1.$$

The total number of combinations of 3 things is

$$C_1^3 + C_2^3 + C_3^3 = 3 + 3 + 1 = 7, \text{ or } 2^3 - 1.$$

The total number of combinations of 4 things is

$$C_1^4 + C_2^4 + C_3^4 + C_4^4 = 4 + 6 + 4 + 1 = 15, \text{ or } 2^4 - 1.$$

PRINCIPLE 8. — *The total number of combinations of n different things is* $2^n - 1$.

The above principle may be established as follows:

§ 452, when n is a positive integer,

$$(1+x)^n = 1 + nx + \frac{n(n-1)}{1 \cdot 2} x^2 + \cdots + \frac{n(n-1)(n-2)\cdots 1}{1 \cdot 2 \cdot 3 \cdots n} x^n.$$

If $x = 1$, $$2^n = 1 + n + \frac{n(n-1)}{1 \cdot 2} + \cdots + \frac{n(n-1)(n-2)\cdots 1}{1 \cdot 2 \cdot 3 \cdots n}$$

Prin. 3, $$= 1 + C_1^n + C_2^n + \cdots + C_n^n = 1 + C_{\text{total}}^n$$

$$\therefore C_{\text{total}}^n = 2^n - 1.$$

EXAMPLES

1. How many different sums can be paid with a cent, a 5-cent piece, a dime, a quarter, a half-dollar, and a dollar?

SOLUTION. — Total $C^6 = 2^6 - 1 = 63$.

2. A man has 10 friends. In how many ways may he invite one or more of them to dinner?

3. How many different quantities can be weighed by weights of 1 oz., 1 lb., $\frac{1}{2}$ lb., 5 lb., and 10 lb.?

4. How many signals can be made with 7 flags?

5. By permuting the letters of the word *counter*, how many permutations can be formed

(*a*) ending in *er*?
(*b*) with n as the middle letter?
(*c*) without changing the position of any vowel?
(*d*) beginning with a consonant?

6. How many numbers can be formed with the digits 1, 2, 3, 4, 3, 2, 1, so that the odd digits always occupy the odd places?

7. If the number of permutations of n different things taken 5 at a time is equal to 24 times the number of permutations of the same number of things taken 2 at a time, find n.

8. How many permutations can be made of the letters of the word *international*, taken all together?

9. A man has five coats, six vests, and eight pairs of trousers. In how many different suits may he appear?

10. In how many ways may a committee of 5 men and 3 women be chosen from 10 men and 5 women?

11. Mr. Alexander has 5 pairs of gloves. In how many ways can he select a right-hand glove and a left-hand glove without selecting a pair?

12. In how many ways can a party of 12 young people form a ring?

13. In how many ways can 5 ladies and 5 gentlemen be seated at a round table so that no two ladies sit together?

14. A man belongs to a club of 16 members and every day he invites three members to dine with him. For how many days can he invite a different party each day?

15. In how many ways may 12 persons seat themselves at two round tables, 6 persons at each table?

16. In how many ways may 8 books be arranged on a shelf so that two particular books will not be together?

17. In how many ways may a committee of 5 be appointed from 12 boys and 10 girls so that there will be more boys than girls in the committee?

18. A boat's crew consists of 8 men, of whom 3 can row only on the port side and 2 only on the starboard side. In how many ways can the crew be seated?

19. In how many different numbers less than 1000 does the digit 9 appear?

20. From a detachment of 20 soldiers 4 are detailed each night for picket duty. For how many successive nights can a different picket be formed and how many times will each soldier be on duty during this interval?

PROBABILITY

502. Suppose that a person draws one ball at random from a bag containing 3 white balls and 2 black balls, and it is required to find his chance of drawing a white ball.

Since this event can happen in 3 ways, namely, by drawing any one of the 3 white balls, and can fail in 2 ways, namely, by drawing either of the 2 black balls, it is seen that the ratio of the number of ways favorable to drawing a white ball to the whole number of ways, favorable and unfavorable, is $3:5$. This is expressed by saying that the *chance*, or *probability*, of drawing a white ball is $\frac{3}{5}$.

Similarly, the probability of drawing a black ball is $\frac{2}{5}$.

If one of the black balls is removed before drawing, the probability of drawing a white ball is increased to $\frac{3}{4}$ and the probability of drawing a black ball is diminished to $\frac{1}{4}$. If both black balls are removed, the probability of drawing a white ball amounts to *certainty*, expressed by $\frac{3}{3}$, or 1, and the probability of drawing a black ball becomes zero, the occurrence being *impossible*.

503. If an event can happen in a ways and fail in b ways, and all of these ways are equally likely to occur, the **chance**, or **probability**, that it will happen is $\frac{a}{a+b}$, and the probability that it will fail is $\frac{b}{a+b}$.

If $a = b$, the chances are said to be *even*.

504. The ratio of the probability that an event will happen to the probability that it will fail is called the **odds in favor** of the event, and the reciprocal ratio is called the **odds against** the event.

Thus, if a person draws one ball at random from a bag containing 3 white balls and 2 black balls, the odds are 3 to 2 in favor of his drawing a white ball and 2 to 3 against his drawing a white ball.

505. PRINCIPLES. — 1. *If the probability that an event will happen is equal to p, the probability that it will fail is equal to $1 - p$.*

2. *If an event is certain to happen, its probability is* 1; *if an event is certain to fail, its probability is zero.*

The above principles may be established as follows:

Suppose that an event can happen in a ways and fail in b ways.

1. Then, by the definition of probability, the probability that the event will happen is $\frac{a}{a+b}$ and the probability that it will fail is $\frac{b}{a+b}$. Since the sum of these probabilities is 1, if the probability that the event will happen is equal to p, the probability that it will fail is equal to $1 - p$.

2. If an event is certain to happen, the probability that it will fail is equal to zero; that is, $1 - p = 0$, or $p = 1$.

If the event is certain to fail, the probability that it will fail, as has just been proved, is equal to 1; that is, $1 - p = 1$, or $p = 0$.

PROBLEMS

1. If one ball is drawn at random from a bag containing 3 white balls, 4 black balls, and 5 red balls, what is the probability that it is red? What are the odds against its being red?

SOLUTION

Since 5 of the 12 balls are red, the probability of drawing a red ball is 5 in 12, or $\frac{5}{12}$.

Since 7 of the 12 balls are not red, the probability that the ball drawn is not red is $\frac{7}{12}$, and the odds against drawing a red ball are $\frac{7}{12}$ to $\frac{5}{12}$, or 7 to 5.

2. If three coins are tossed, what is the probability (*a*) that all fall heads? (*b*) that a certain two fall heads and the third tail? (*c*) that any two fall heads and one tail? (*d*) that at least two fall heads?

SOLUTION

For convenience call the coins A, B, and C.

(*a*) Since the probability that any coin falls head is $\frac{1}{2}$, and since, whether A falls head or tail, B may fall either head or tail, the probability that both A and B fall heads is $\frac{1}{2} \times \frac{1}{2}$, or $\frac{1}{4}$. Again, since when both A and B fall heads C may fall either head or tail, the probability that all fall heads is $\frac{1}{4} \times \frac{1}{2}$, or $\frac{1}{8}$.

(*b*) Since the probability that a certain two, as A and B, fall heads is $\frac{1}{2} \times \frac{1}{2}$, or $\frac{1}{4}$, and since when A and B have fallen heads C may fall either head or tail, the probability that a certain two fall heads and the third tail is $\frac{1}{4} \times \frac{1}{2}$, or $\frac{1}{8}$.

(*c*) Since A and B, or A and C, or B and C may fall heads while in each case the third coin has even chances of falling head or tail, the probability that some two coins will fall head and the third coin tail is 3 times as great as the probability that a certain two will fall heads and the third tail. Hence, by (*b*) the probability of this event is $\frac{3}{8}$.

(*d*) The probability that *at least* two coins fall heads is greater than the probability that two fall heads and one tail, for the former includes, while the latter excludes, the probability that *all* fall heads. Since by (*c*) the probability that two fall heads and one tail is $\frac{3}{8}$, and by (*a*) the probability that all fall heads is $\frac{1}{8}$, the probability that at least two coins fall heads is $\frac{3}{8} + \frac{1}{8}$, or $\frac{1}{2}$.

3. From a bag containing 8 white balls and 4 black balls, 4 balls are drawn at random. What is the probability that 2 are white and 2 are black?

First Solution. — Suppose that the balls are drawn one at a time. The probability that the first drawn is white is $\frac{8}{12}$; if the first is white, the probability that the second is white is $\frac{7}{11}$; when two white balls have been drawn, the probability that the third is black is $\frac{4}{10}$; and when 2 white balls and 1 black ball have been drawn, the probability that the next is black is $\frac{3}{9}$.

Hence, the probability of drawing 2 white balls and 2 black balls in the order *WWBB* is $\frac{8}{12} \cdot \frac{7}{11} \cdot \frac{4}{10} \cdot \frac{3}{9}$; and similarly for each of the $\frac{\lfloor 4}{\lfloor 2 \lfloor 2}$ orders in which 2 white balls and 2 black balls can be drawn.

$$\therefore\ p = \frac{(8 \cdot 7 \cdot 4 \cdot 3)(4 \cdot 3 \cdot 2 \cdot 1)}{(12 \cdot 11 \cdot 10 \cdot 9)(1 \cdot 2 \cdot 1 \cdot 2)} = \frac{56}{165}.$$

Second Solution. — From 12 balls 4 balls can be selected in C_4^{12} ways. Again, from 8 white balls 2 white balls can be selected in C_2^8 ways, and from 4 black balls 2 black balls can be selected in C_2^4 ways.

Therefore, out of C_4^{12} ways of selecting 4 balls from 12, $C_2^8 \cdot C_2^4$ lead to selecting 2 white balls and 2 black balls.

$$\therefore\ p = \frac{C_2^8 \cdot C_2^4}{C_4^{12}} = \frac{(8 \cdot 7)(4 \cdot 3)(1 \cdot 2 \cdot 3 \cdot 4)}{(1 \cdot 2)(1 \cdot 2)(12 \cdot 11 \cdot 10 \cdot 9)} = \frac{56}{165}.$$

4. A and B and eight other persons seat themselves at random around a circular table. What is the probability that A and B sit together?

First Solution

Since A may sit with each of the 9 other persons in 2 ways, on the right or on the left, but whenever he sits on the right of one person he sits on the left of another, the whole number of ways in which he can sit with different persons is 9. Now on 2 occasions A sits with B, once on B's right and once on B's left. Hence, if the ten persons seat themselves at random, the probability that A and B will sit together is $\frac{2}{9}$.

Second Solution

If A and B and the other 8 persons seat themselves at random, § 499, the whole number of ways in which they may sit around the circular table is $\lfloor 9$.

To find how many of these ways lead to seating A and B together, suppose that A and B first seat themselves side by side while the remaining persons take at random the 8 remaining seats. A and B may sit together in two ways, A on the right or on the left of B, and with each of these ways the other persons may be seated in any one of P_8^8 ways. Hence, $2\ P_8^8$ ways lead to seating A and B together.

Since there are $2\ P_8^8$, or $2 \lfloor 8$, ways that lead to seating A and B together and $\lfloor 9$ ways in all, the probability that A and B sit together is

$$\frac{2\lfloor 8}{\lfloor 9} = \frac{2\lfloor 8}{9\lfloor 8} = \frac{2}{9}.$$

5. In a hat are placed 25 tickets numbered from 1 to 25. Three tickets, each entitling the holder of their duplicates to a prize, are drawn from the hat. What is the probability that A, who holds a duplicate of number 10 and also of number 11, will receive at least one prize?

Solution

The whole number of ways in which 3 tickets can be drawn is

$$C_3^{25} = \frac{25 \cdot 24 \cdot 23}{1 \cdot 2 \cdot 3} = 2300.$$

To find how many of the 2300 possible ways of drawing 3 tickets involve the drawing of ticket number 10, and not ticket number 11, suppose that all the groups of 3 tickets in which ticket number 10 is found are formed by first selecting this ticket and then associating with it every possible combination of the remaining 23 tickets taken 2 at a time. From this it is evident that any particular ticket is found in C_2^{23} of the 2300 possible groups of 3 tickets

Hence, the probability that A will draw a prize with the duplicate of number 10 is

$$\frac{C_2^{23}}{2300} = \frac{23 \cdot 11}{2300} = \frac{11}{100}.$$

Since he has the same chance with the duplicate of number 11, his chance of drawing one prize is $\frac{22}{100}$.

In like manner, since any two particular tickets, as numbers 10 and 11, are found in C_1^{23} of the 2300 possible groups of 3 tickets, the probability that A will draw two prizes is

$$\frac{C_1^{23}}{2300} = \frac{1}{100}.$$

Since the probability that A will draw at least one prize includes not only the probability that he will draw a prize with one or the other of the two duplicates, but also the probability that he will draw prizes with both of them, the probability that he will draw at least one prize is $\frac{22}{100} + \frac{1}{100}$, or $\frac{23}{100}$.

6. From a bag containing 4 white balls and 8 red balls one ball is taken at random. What is the probability that it will be white? What are the odds against drawing a white ball?

7. A die has 2 white sides and 4 black sides. What is the probability that a white side will be thrown?

8. When two dice are thrown, what is the chance of throwing double sixes? of throwing a 5 and a 6?

9. If two cards are drawn at random from a pack of 52 cards, 4 of which are kings, what is the probability that both are kings?

10. A committee of four is chosen by lot from 5 Democrats and 4 Republicans. What is the probability that it will be composed of 2 Democrats and 2 Republicans?

11. From a bag containing 5 black balls, 6 red balls, and 7 white balls, 4 balls are drawn at random. What is the probability that all are black? that 2 are black and 2 are white?

12. What is the probability that 6 can be thrown in a single throw of two dice?

13. What is the chance of throwing over 20 with four dice?

14. From an urn containing 40 tickets, numbered from 1 to 40, four tickets are drawn. If each ticket drawn entitles the holder of the duplicate to a prize and A holds duplicates of two tickets, what is the chance of A's obtaining at least one prize?

15. A has three shares in a lottery that offers 2 prizes to 18 blanks. B has two shares in a lottery that offers 5 prizes to 25 blanks. Compare their chances of drawing at least one prize.

SUGGESTION. — Since out of C_3^{20} ways of drawing 3 tickets from 20 there are C_3^{18} ways of drawing three blanks, the probability that A will draw 3 blanks is $\frac{C_3^{18}}{C_3^{20}} = \frac{18 \cdot 17 \cdot 16}{20 \cdot 19 \cdot 18} = \frac{68}{95}$. Hence, Prin. 2, the probability that A will *fail* to draw 3 blanks, and therefore draw *at least one* prize, is $1 - \frac{68}{95}$, or $\frac{27}{95}$.

16. A has three tickets in a lottery containing 10 prizes and 90 blanks. B has three tickets in another lottery containing 5 prizes and 45 blanks. Show that B has a better chance than A of winning at least one prize.

506. When two or more events are regarded, in the occurrence or non-occurrence of some or all of them, as joining to make one event, the resulting event is called a **Compound Event.**

Thus, if an ace is thrown with each of two dice, these two events may be regarded as joining to produce a compound event, namely, throwing a pair of aces.

Again, if the event of throwing an ace with one die is joined to the event of failing to throw an ace with the other die, the occurrence and non-occurrence of the event of throwing an ace with a single die are joined to produce a compound event, namely, throwing only one ace with two dice.

507. Events that compose a compound event are said to be **Independent** or **Dependent** according as the occurrence of one does not or does affect the probability of the occurrence of the other or others.

Thus, in the event of throwing double sixes with two dice, the component events are independent. But in the compound event that six shall be thrown with one die on the second trial, the component events are dependent, since the success of the second trial depends partially upon the failure of the first trial.

508. Events that form a compound event by joining the occurrence of each event to the non-occurrence of each of the others are called **Mutually Exclusive Events.**

The compound event of throwing over 9 with two dice is composed of three mutually exclusive events. For when 10 is thrown, neither 11 nor 12 can be

thrown; when 11 is thrown, neither 10 nor 12 can be thrown; and when 12 is thrown, neither 10 nor 11 can be thrown.

509. PRINCIPLES. — 3. *The probability of a compound event composed of independent events is equal to the product of the probabilities of the independent events.*

4. *If p is the probability that an event will happen in one trial, the probability that it will happen n times in succession is p^n.*

5. *The probability that all of two or more independent events will fail is* $(1 - p_1)(1 - p_2) \cdots$.

Principle 3 may be established as follows:

Let P be the probability of a compound event composed of events whose probabilities are $p_1, p_2, p_3, \cdots$.

It is to be proved that $P = p_1 p_2 p_3 \cdots$.

Suppose that the first event can happen in a ways and fail in b ways, all equally likely; and that the second can happen in c ways and fail in d ways, all equally likely.

Since the events are independent, not only may both happen together, but either may happen while the other fails, or both may fail together. Hence, the probability that both will happen together is the ratio of the number of ways they can happen together to the whole number of ways they can happen or fail.

Since each of the a cases in which the first event happens may be associated with each of the c cases in which the second event happens, there are ac cases in which both can happen together.

Similarly, there are ad cases in which the first happens while the second fails, bc cases in which the first fails while the second happens, and bd cases in which both fail together.

Hence, if the probability that both will happen together is p,

$$p = \frac{ac}{ac + ad + bc + bd}$$

$$= \frac{a}{a + b} \cdot \frac{c}{c + d} = p_1 p_2.$$

If there is a third event, whose probability of happening is p_3, the concurrence of the three events may be regarded as the concurrence of two events by considering the concurrence of the first two as a single event whose probability of happening is $p = p_1 p_2$. Hence, the probability of the three events happening together is pp_3, or $p_1 p_2 p_3$.

Since this method can be extended to the consideration of any number of independent events, $P = p_1 p_2 p_3 \cdots$.

The proofs of Principles 4 and 5 are left for the student.

Problems

1. The probability that A will die within 20 years is $\frac{2}{11}$, and that his wife will die during that interval is $\frac{3}{14}$. What is the probability that at the end of 20 years (1) both will be dead? (2) both will be living? (3) A will be living and his wife dead? (4) A will be dead and his wife living?

Solution. — 1. Prin. 3, $P = \frac{2}{11} \times \frac{3}{14} = \frac{3}{77}$.

2. Prin. 5, $P = (1 - \frac{2}{11})(1 - \frac{3}{14}) = \frac{9}{14}$.

3. Prin. 5, Prin. 3, $P = (1 - \frac{2}{11})\frac{3}{14} = \frac{27}{154}$.

4. Prin. 5, Prin. 3, $P = (1 - \frac{3}{14})\frac{2}{11} = \frac{1}{7}$.

2. A crosses the United States, passing through five cities where he has friends. If the odds are 3 to 1 against his meeting a friend in any one of the five cities, what is the probability that he will meet a friend in each city?

510. Principle 6. — *The probability of a compound event composed of a series of events, dependent or independent, is equal to the probability that the first happens, multiplied by the probability that, after the first has happened, the second happens, etc.*

For if the events are independent, considering them to happen in any order does not modify the probability of any of them; and if they are dependent, after each has happened and so has modified the probability of the following event, the modified event may be regarded as independent of the preceding event.

Problems

1. From a bag containing 3 white balls and 5 black balls A draws a ball, and after A has replaced the ball B draws a ball. What is the probability that A draws a white ball and B a black ball? What would have been the probability of A drawing a white ball, and B a black ball, had A not replaced the ball he drew?

Solution

Since by replacing the ball A removes the effect of his drawing upon the probability that B draws a black ball, the events under the first supposition are independent, but under the second they are dependent.

In the first case, since the separate probabilities are $\frac{3}{8}$ and $\frac{5}{8}$, the joint probability is $\frac{3}{8} \times \frac{5}{8}$, or $\frac{15}{64}$.

In the second case, supposing that A draws a white ball, B's chance of drawing a black ball out of 2 white balls and 5 black balls is $\frac{5}{7}$. That is, the joint probability of A drawing a white ball and B a black ball would have been $\frac{3}{8} \times \frac{5}{7}$, or $\frac{1}{5}\frac{5}{6}$.

2. A starts on an ocean voyage. The probability that the ship will encounter a storm is $\frac{1}{2}$. If she does, the probability that she will spring a leak is $\frac{1}{10}$, but 10 to 1 if she springs a leak her engines will be able to pump her out. If they fail, the probability that the compartments will keep her afloat is $\frac{3}{4}$. If she sinks, it is an even chance that any one passenger will be saved by passing boats. What is the probability that A will be lost at sea?

511. PRINCIPLE 7. — *The probability of a compound event composed of two or more mutually exclusive events is equal to the sum of their separate probabilities.*

For if one event can happen a times out of n, another b times out of n, another c times out of n, etc., if whenever one event happens the others fail, such a union of occurrence and non-occurrence can happen $a + b + c + \cdots$ times out of n times.

Hence, the probability of such a compound event is

$$\frac{a + b + c + \cdots}{n}, \text{ or } \frac{a}{n} + \frac{b}{n} + \frac{c}{n} + \cdots;$$

that is, when it is impossible for more than one of a series of events to happen at the same time, the probability that some one of them will happen is the sum of the probabilities of the individual events.

512. Let p be the probability that an event will happen in one trial, and let it be required to find: (a) the probability that it will happen exactly r times in n trials; (b) the probability that it will happen at least r times in n trials.

(a) By Prin. 4, the probability that the event will happen any particular r times is p^r, and since, Prin. 1, the probability that the event will fail in any one trial is $1 - p$, the probability that it will fail the remaining $n - r$ times is $(1 - p)^{n-r}$.

Hence, Prin. 3, the probability of the compound event, that the event will happen in any *particular* r trials and fail in the remaining $n - r$ trials, is $p^r(1 - p)^{n-r}$.

Since out of n trials, exactly r successful trials can be made in as many ways as there are combinations of r things out of n different things, when each excludes the others the probability that the event will happen exactly r times out of n is C_r^n times as great as the probability that the event will happen in any particular r trials and fail in the remaining $n - r$ trials.

Hence, *the probability that the event will happen exactly r times in n trials is*

$$C_r^n p^r (1-p)^{n-r}. \tag{A}$$

(*b*) Happening at least r times in n trials includes the following mutually exclusive events, namely, happening exactly n, $n-1$, $\cdots$, r times in n trials. Substituting these values successively for r in $C_r^n p^r (1-p)^{n-r}$, and adding, Prin. 7, the probability that the event will happen at least r times in n trials is

$$p^n + C_1^n p^{n-1}(1-p) + C_2^n p^{n-2}(1-p)^2 + \cdots + C_r^n p^r (1-p)^{n-r},$$

or

$$p^n + np^{n-1}(1-p) + \frac{n(n-1)}{\lfloor 2}\, p^{n-2}(1-p)^2 + \cdots \text{ to } n-r+1 \text{ terms.} \tag{B}$$

Miscellaneous Problems

1. Show that the probabilities of throwing 2, 3, 4, $\cdots$, 12, respectively, in one throw of 2 dice are $\frac{1}{36}$, $\frac{2}{36}$, $\frac{3}{36}$, $\frac{4}{36}$, $\frac{5}{36}$, $\frac{6}{36}$, $\frac{5}{36}$, $\frac{4}{36}$, $\frac{3}{36}$, $\frac{2}{36}$, $\frac{1}{36}$, respectively.

Solution

Since a die has six faces numbered from 1 to 6, the probability of throwing any particular number from 1 to 6 with one die is $\frac{1}{6}$, and the probability of throwing the same number with two dice, or of throwing any two designated numbers, one with each die, is $\frac{1}{6} \times \frac{1}{6}$, or $\frac{1}{36}$.

2, 3, 4, $\cdots$, 12 can be thrown as follows:

$$2 = 1+1, \qquad 12 = 6+6,$$

$$3 = \left\{\begin{matrix} 1+2 \\ 2+1 \end{matrix}\right\}, \qquad 11 = \left\{\begin{matrix} 5+6 \\ 6+5 \end{matrix}\right\},$$

$$4 = \left\{\begin{matrix} 1+3 \\ 2+2 \\ 3+1 \end{matrix}\right\}, \qquad 10 = \left\{\begin{matrix} 4+6 \\ 5+5 \\ 6+4 \end{matrix}\right\},$$

and so on.

Hence, 2 and 12 can be thrown each in 1 way; 3 and 11, each in 2 ways; 4 and 10, each in 3 ways; 5 and 9, each in 4 ways; 6 and 8, each in 5 ways; and 7, in 6 ways. Therefore, since the probability of throwing two dice in any designated way is $\frac{1}{36}$, if p_2, p_3, ···, denote the probabilities of throwing 2, 3, ···, respectively, in one throw,

$$p_2 = \tfrac{1}{36},\ p_3 = \tfrac{2}{36},\ p_4 = \tfrac{3}{36},\ p_5 = \tfrac{4}{36},\ p_6 = \tfrac{5}{36},\ p_7 = \tfrac{6}{36},$$

$$p_8 = \tfrac{5}{36},\ p_9 = \tfrac{4}{36},\ p_{10} = \tfrac{3}{36},\ p_{11} = \tfrac{2}{36},\ p_{12} = \tfrac{1}{36}.$$

2. What is the probability of throwing an ace (*a*) six times in six trials? (*b*) at least once in six trials?

SOLUTION

(*a*) Since the probability of throwing an ace in a single trial is $\frac{1}{6}$, the probability of throwing an ace six times in succession is $(\frac{1}{6})^6 = \frac{1}{46656}$.

The same result may be obtained by substituting $\frac{1}{6}$ for p, 6 for n, and 6 for r in formula (A).

(*b*) If the ace is not thrown at least once in six trials, then the person who throws the die must fail to throw the ace six times in succession.

Since the probability of failing to throw an ace is $1 - \frac{1}{6}$, or $\frac{5}{6}$, with each trial, the probability of failing to throw an ace six times in succession is $(\frac{5}{6})^6$.

Hence, the probability of throwing an ace at least once in six trials is $1 - (\frac{5}{6})^6$, or $\frac{31031}{46656}$, which is slightly less than $\frac{2}{3}$.

The same result may be obtained by substituting $\frac{1}{6}$ for p, $\frac{5}{6}$ for $1 - p$, 6 for n, and 1 for r in formula (B). Thus, if the probability of throwing at least one ace in 6 trials is P,

$$P = \left(\frac{1}{6}\right)^6 + 6\left(\frac{1}{6}\right)^5\frac{5}{6} + \frac{6\cdot5}{1\cdot2}\left(\frac{1}{6}\right)^4\left(\frac{5}{6}\right)^2 + \frac{6\cdot5\cdot4}{1\cdot2\cdot3}\left(\frac{1}{6}\right)^3\left(\frac{5}{6}\right)^3$$

$$+ \frac{6\cdot5\cdot4\cdot3}{1\cdot2\cdot3\cdot4}\left(\frac{1}{6}\right)^2\left(\frac{5}{6}\right)^4 + \frac{6\cdot5\cdot4\cdot3\cdot2}{1\cdot2\cdot3\cdot4\cdot5}\left(\frac{1}{6}\right)\left(\frac{5}{6}\right)^5$$

$$= (\tfrac{1}{6} + \tfrac{5}{6})^6 - (\tfrac{5}{6})^6 = 1 - (\tfrac{5}{6})^6 = \tfrac{31031}{46656}.$$

3. If A and B take turns in the order named in drawing one ball from a bag containing 2 white balls and 4 black balls, what chance has each of being the first to draw a white ball? If A and B are drawing for a prize of $25, how much less is B's chance worth than A's?

SOLUTION

First trial. — The probability that A will draw a white ball is $\frac{2}{6}$, or $\frac{1}{3}$, and the probability that he will draw a black ball and so give B an opportunity to draw from the remaining 2 white balls and 3 black balls is $1 - \frac{1}{3}$, or $\frac{2}{3}$.

Second trial. — The probability that B will have an opportunity to draw and will draw a white ball is $\frac{2}{5} \times \frac{3}{5}$, or $\frac{6}{25}$, and the probability that he will draw a black ball and so give A an opportunity to draw from the remaining 2 white balls and 2 black balls is $\frac{2}{5}(1 - \frac{2}{5})$, or $\frac{6}{25}$.

Third trial. — The probability that A will have an opportunity to draw and will draw a white ball is $\frac{3}{5} \times \frac{1}{2}$, or $\frac{3}{10}$, and the probability that he will draw a black ball and thus give B an opportunity to draw from the remaining 2 white balls and 1 black ball is $\frac{3}{5}(1 - \frac{1}{2})$, or $\frac{3}{10}$.

Fourth trial. — The probability that B will have an opportunity to draw and will draw a white ball is $\frac{1}{5} \times \frac{2}{3}$, or $\frac{2}{15}$, and the probability that he will draw a black ball and thus give A an opportunity to draw from the remaining 2 white balls is $\frac{1}{5}(1 - \frac{2}{3})$, or $\frac{1}{15}$.

Fifth trial. — The probability that A will have an opportunity to draw and will draw a white ball is $\frac{1}{15} \times \frac{2}{2}$, or $\frac{1}{15}$, and the probability that B will have another opportunity to draw is $\frac{1}{15} \times \frac{0}{2}$, or 0.

Hence, A's chance for the prize is $\frac{1}{3} + \frac{1}{5} + \frac{1}{15}$, or $\frac{8}{15}$, and B's chance is $\frac{4}{15} + \frac{2}{15}$, or $\frac{2}{5}$. Since the prize is worth \$25, A's chance is worth $\frac{3}{5}$ of \$25, or \$15, and B's chance is worth $\frac{2}{5}$ of \$25, or \$10, that is, \$5 less than A's.

NOTE. — A's *expectation* is \$15 and B's expectation is \$10.

4. What is the probability of throwing more than 10 in a single throw with two dice?

5. Compare the probabilities of throwing 3 with one die and 6 with two dice.

6. The probabilities of three events are $\frac{2}{3}$, $\frac{3}{4}$, and $\frac{1}{2}$, respectively. What is the probability that one, but not more than one of them, will happen?

7. The odds in favor of A's solving a certain problem are 2 to 1, and the odds in favor of B's solving it are 3 to 2. If both attempt the solution, what is the probability that it will be solved? What is the probability that both will solve it?

8. If 4 coins are tossed, what is the probability that at least one will fall head? that one and only one will fall head?

9. Which is the greater, the probability of throwing at least one ace in six trials, or the probability of throwing at least one head of a coin in two trials?

10. Show that the probability of throwing an ace with a single die is $\frac{11}{36}$ in two trials and $\frac{91}{216}$ in three trials.

11. What is the chance that a backgammon player who has two throws with two dice will make exactly 10?

12. The door of A's house has a spring lock that fails to lock the door 2 times out of 5. A comes home, and in the darkness cannot distinguish between 6 keys, one of which fits the lock. What is the probability that he will get in without a key? with the first key he uses? with the first two keys? with the first three keys?

13. What is the chance of throwing just 30 in three throws of two dice?

14. Find the probability of throwing double fives with two dice exactly 3 times out of 4.

15. A, B, and C take turns, in the order named, in drawing one ball from a bag containing 2 black balls and 4 balls of other colors, agreeing that the first to draw a black ball shall receive \$ 150. What is the value of the expectation of each?

16. From a bag containing 10 5-dollar bills and 20 2-dollar bills, I have the privilege of drawing two bills at random. What is the value of my expectation?

17. A, B, and C toss a coin, in the order named, until one wins by tossing head. Find the chance that each has of winning.

18. A and B throw a die alternately, in the order named, until one wins by throwing an ace. What chance has each of winning?

19. A and B toss a dollar alternately, in the order named, agreeing that the dollar shall go to the one who first throws head. What is the value of the expectation of each? If the dollar is their joint property, each owning half, what is the probable gain or loss of each?

20. From a bag containing 10 balls numbered 1, 2, 3, ···, 10, five balls are drawn at random, each ball being replaced before the next is drawn. Find the probability of drawing the ball numbered 4 exactly three times; at least twice.

21. A machinist works 300 days a year. If the odds are 1000 to 1 against his meeting with an accident on any particular work day, show that the odds against his escaping injury for 5 years are about 3 to 1. (Use logarithms.)

SIMPLE CONTINUED FRACTIONS

513. An expression of the form $a + \cfrac{b}{c + \cfrac{d}{e + \cdots}}$ is called a **Continued Fraction.**

It is usually written in the more compact form

$$a + \frac{b}{c +} \; \frac{d}{e + \cdots}.$$

514. A continued fraction in which each numerator is 1 and each denominator is a positive integer is called a **Simple Continued Fraction.**

The integral part a may be either a positive integer or zero.

In this chapter only simple continued fractions will be discussed, and for the sake of brevity these will be called continued fractions.

515. A continued fraction is said to be **terminating** or **infinite** according as the number of denominators is finite or indefinitely great.

A terminating continued fraction may be reduced to a simple fraction as in § 184.

516. In the continued fraction

$$a_1 + \frac{1}{a_2 +} \; \frac{1}{a_3 +} \; \frac{1}{a_4 + \cdots},$$

which will be used as the general symbol of a continued fraction, a_1 is called the **first convergent,** $a_1 + \dfrac{1}{a_2}$ the **second convergent,** $a_1 + \cfrac{1}{a_2 + \cfrac{1}{a_3}}$ the **third convergent,** and so on.

When a_1 is lacking, 0 is regarded as the first convergent.

$a_1, a_2, a_3, \cdots$ are called **partial quotients**.

$a_2 + \dfrac{1}{a_3 + \cdots}$, $a_3 + \dfrac{1}{a_4 + \cdots}$, $\cdots$ are called **complete quotients**.

517. Let $\dfrac{a}{b}$ be a fraction whose terms are integers greater than 1.

Dividing a by b, let a_1 be the quotient and b_1 the remainder.

Then,
$$\frac{a}{b} = a_1 + \frac{b_1}{b} = a_1 + \cfrac{1}{\cfrac{b}{b_1}}.$$

Dividing b by b_1, let a_2 be the quotient and b_2 the remainder.

Then,
$$\frac{a}{b} = a_1 + \cfrac{1}{a_2 + \cfrac{b_2}{b_1}} = a_1 + \cfrac{1}{a_2 + \cfrac{1}{\cfrac{b_1}{b_2}}}.$$

Continuing this process exactly as in finding the H. C. D. of a and b, the result is a continued fraction. Since a and b are positive integers, the process must finally come to an end when the H. C. D., or if none exists, then unity itself, is obtained as a divisor. Hence,

A fraction whose terms are integers greater than 1 *may be converted into a terminating continued fraction.*

Examples

1. Reduce $\frac{151}{24}$ to a continued fraction.

Solution.

$$\begin{array}{l}
\underline{24}\,|\,151\,|\,\underline{6} = a_1 \\
\quad\ \underline{144} \\
\qquad \underline{7}\,|\,24\,|\,\underline{3} = a_2 \\
\qquad\quad \underline{21} \\
\qquad\qquad \underline{3}\,|\,7\,|\,\underline{2} = a_3 \\
\qquad\qquad\quad \underline{6} \\
\qquad\qquad\quad \underline{1}\,|\,3\,|\,\underline{3} = a_4
\end{array}$$

$$\therefore \frac{151}{24} = 6 + \frac{1}{3+}\,\frac{1}{2+}\,\frac{1}{3}.$$

Reduce to continued fractions:

2. $\frac{17}{12}$. 3. $\frac{37}{10}$. 4. $\frac{32}{21}$. 5. $\frac{384}{157}$. 6. $\frac{19}{43}$. 7. $\frac{133}{703}$.

518. In $a_1 + \cfrac{1}{a_2 + \cfrac{1}{a_3 + \cdots}}$, let $\frac{p_1}{q_1}, \frac{p_2}{q_2}, \frac{p_3}{q_3}, \ldots, \frac{p_n}{q_n}, \ldots$ be the successive convergents reduced to simple fractions. Then,

$$\frac{p_1}{q_1} = \frac{a_1}{1}; \quad \frac{p_2}{q_2} = \frac{a_2 a_1 + 1}{a_2 \cdot 1}; \quad \frac{p_3}{q_3} = \frac{a_3(a_2 a_1 + 1) + a_1}{a_3 a_2 + 1} = \frac{a_3 p_2 + p_1}{a_3 q_2 + q_1};$$

and $$\frac{p_4}{q_4} = \frac{a_4[a_3(a_2 a_1 + 1) + a_1] + (a_2 a_1 + 1)}{a_4(a_3 a_2 + 1) + a_2} = \frac{a_4 p_3 + p_2}{a_4 q_3 + q_2}.$$

From an examination of the third and fourth convergents it is seen that they are formed according to a certain law. If the nth convergent obeys this law,

$$\frac{p_n}{q_n} = \frac{a_n p_{n-1} + p_{n-2}}{a_n q_{n-1} + q_{n-2}}. \tag{1}$$

It remains to be shown that if (1) is true for the nth convergent, it will be true for the $(n+1)$th convergent.

Since the $(n+1)$th convergent differs from the nth only in having $a_n + \frac{1}{a_{n+1}}$ instead of a_n,

$$\frac{p_{n+1}}{q_{n+1}} = \frac{\left(a_n + \frac{1}{a_{n+1}}\right) p_{n-1} + p_{n-2}}{\left(a_n + \frac{1}{a_{n+1}}\right) q_{n-1} + q_{n-2}};$$

multiplying both terms by a_{n+1} and rearranging,

$$= \frac{a_{n+1}(a_n p_{n-1} + p_{n-2}) + p_{n-1}}{a_{n+1}(a_n q_{n-1} + q_{n-2}) + q_{n-1}}$$

by (1), $$= \frac{a_{n+1} p_n + p_{n-1}}{a_{n+1} q_n + q_{n-1}}, \tag{2}$$

which has the same form as (1), $n+1$ taking the place of n.

Hence, if (1) is true, (2) is true; that is, if the law of formation of successive convergents revealed in the third and fourth convergents is true for any particular convergent, it holds true for the next convergent.

Therefore, since the law is true for the fourth convergent, it holds for the fifth; and being true for the fifth, it holds for the sixth; and so on.

Hence, formula (1) expresses the law of formation of the successive convergents to a continued fraction, each convergent after

the second being obtained from the two convergents immediately preceding it.

This formula is called the *recurrence formula.*

Examples

1. Find the first six convergents to

$$3+\cfrac{1}{2+}\,\cfrac{1}{6+}\,\cfrac{1}{2+}\,\cfrac{1}{6+}\,\cfrac{1}{2+\cdots}.$$

Solution. — The first two convergents, 3 and $\frac{7}{2}$, are found by inspection, and the first convergent is written $\frac{3}{1}$ because its denominator is needed in forming the denominator of the third convergent. By the recurrence formula,

$$\text{3d convergent}=\frac{6(7)+3}{6(2)+1}=\frac{45}{13};\qquad \text{4th convergent}=\frac{2(45)+7}{2(13)+2}=\frac{97}{28};$$

$$\text{5th convergent}=\frac{6(97)+45}{6(28)+13}=\frac{627}{181};\quad \text{6th convergent}=\frac{2(627)+97}{2(181)+28}=\frac{1351}{390}.$$

Hence, the first six convergents are 3, $\frac{7}{2}$, $\frac{45}{13}$, $\frac{97}{28}$, $\frac{627}{181}$, $\frac{1351}{390}$.

Note. — In applying the recurrence formula, if the first convergent is 0, it is written $\frac{0}{1}$.

Find the first five convergents to

2. $2+\cfrac{1}{1+}\,\cfrac{1}{3+}\,\cfrac{1}{5+}\,\cfrac{1}{7+\cdots}.$

3. $1+\cfrac{1}{2+}\,\cfrac{1}{3+}\,\cfrac{1}{4+}\,\cfrac{1}{5+\cdots}.$

4. $0+\cfrac{1}{2+}\,\cfrac{1}{1+}\,\cfrac{1}{3+}\,\cfrac{1}{2+\cdots}.$

5. $\cfrac{1}{1+}\,\cfrac{1}{1+}\,\cfrac{1}{1+}\,\cfrac{1}{2+\cdots}.$

519. To illustrate the principles proved in the succeeding articles the student may calculate and compare the convergents of any continued fraction, as

$$1+\cfrac{1}{1+}\,\cfrac{1}{2+}\,\cfrac{1}{3+}\,\cfrac{1}{1+}\,\cfrac{1}{2+}\,\cfrac{1}{3+\cdots}.$$

The convergents of this continued fraction are 1, 2, $\frac{5}{3}$, $\frac{17}{10}$, $\frac{22}{13}$, $\frac{61}{36}$, $\frac{205}{121}$, ···, or 1, 2, 1.66, 1.7, 1.6923, 1.6944, 1.6942, ···, approximately.

It is observed that:

(1) If any two consecutive convergents are chosen, the even convergent is always greater than the odd one.

(2) The even convergents form a descending series and the odd convergents form an ascending series.

(3) The difference between consecutive convergents grows less

and less, and the even and odd convergents seem to approach a common limit. Later the student will be able to show that this limit is $\frac{1}{3}(\sqrt{37}-1)$, an *incommensurable* number and the actual value of the continued fraction.

The accompanying diagram shows the relative size of the successive convergents, represented by the dotted lines.

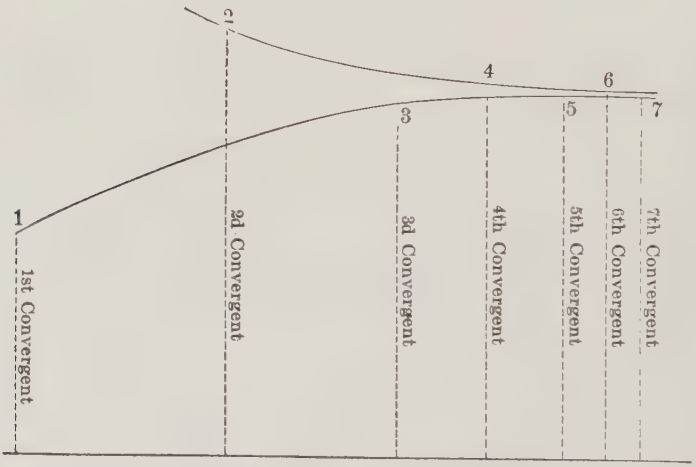

520. Every terminating continued fraction has a single definite value, which is the same as that of its last convergent.

To show that every infinite continued fraction has a single definite value, it is necessary to prove that:

PRINCIPLE 1. — *The difference between any two consecutive convergents, as the $(n+1)$th and the nth, is numerically equal to the reciprocal of the product of their denominators. This difference is negative when the minuend is an odd convergent, and positive when the minuend is an even convergent;* that is,

$$\frac{p_{n+1}}{q_{n+1}} - \frac{p_n}{q_n} = \frac{(-1)^{n+1}}{q_{n+1}q_n}, \text{ or } p_{n+1}q_n - p_nq_{n+1} = (-1)^{n+1}. \qquad (1)$$

Thus, in § 519, $\frac{p_5}{q_5} - \frac{p_4}{q_4} = \frac{22}{13} - \frac{17}{10} = \frac{220-221}{13\cdot 10} = \frac{-1}{13\cdot 10}$,

and $\frac{p_6}{q_6} - \frac{p_5}{q_5} = \frac{61}{36} - \frac{22}{13} = \frac{793-792}{36\cdot 13} = \frac{1}{36\cdot 13}$.

The above principle may be established as follows:

Suppose that the principle is true for the nth and $(n-1)$th convergents.

Then, $\frac{p_n}{q_n} - \frac{p_{n-1}}{q_{n-1}} = \frac{(-1)^n}{q_n q_{n-1}}$, or $p_n q_{n-1} - p_{n-1} q_n = (-1)^n$. (2)

Since by the recurrence formula $p_{n+1} = a_{n+1} p_n + p_{n-1}$ and $q_{n+1} = a_{n+1} q_n + q_{n-1}$,

$$p_{n+1} q_n - p_n q_{n+1} = (a_{n+1} p_n + p_{n-1}) q_n - p_n (a_{n+1} q_n + q_{n-1})$$

canceling, $= p_{n-1} q_n - p_n q_{n-1}$

by (2), $= -(-1)^n = (-1)(-1)^n = (-1)^{n+1}$.

Dividing by $q_n q_{n+1}$, $\frac{p_{n+1}}{q_{n+1}} - \frac{p_n}{q_n} = \frac{(-1)^{n+1}}{q_{n+1} q_n}$.

Therefore, if (2) is true, (1) is true; that is, if the difference between the nth and the $(n-1)$th convergents is found by Prin. 1, the difference between the $(n+1)$th and nth convergents is found by Prin. 1.

But since, § 518, $\frac{p_2}{q_2} - \frac{p_1}{q_1} = \frac{a_2 a_1 + 1}{a_2} - \frac{a_1}{1} = \frac{1}{a_2 \cdot 1}$,

the principle is true for the first two convergents. Therefore, it holds for the second and third; and being true for the second and third, it holds for the third and fourth; and so on. Hence, the principle is true universally.

COROLLARY.* — *The convergents to a continued fraction are fractions in their lowest terms.*

For in (1), if p_n and q_n, or p_{n+1} and q_{n+1}, had a common factor, this factor would be a factor of $p_{n+1} q_n - p_n q_{n+1}$, or of ± 1, which is impossible.

521. PRINCIPLE 2. — *The even convergents to a continued fraction form a descending series and the odd convergents an ascending series.*

The above principle may be established as follows:

By Prin. 1, $\frac{p_{n+1}}{q_{n+1}} - \frac{p_n}{q_n} = \frac{(-1)^{n+1}}{q_{n+1} q_n} = -\frac{(-1)^n}{q_{n+1} q_n}$, (1)

and $\frac{p_n}{q_n} - \frac{p_{n-1}}{q_{n-1}} = \frac{(-1)^n}{q_n q_{n-1}}$. (2)

Adding (1) and (2), $\frac{p_{n+1}}{q_{n+1}} - \frac{p_{n-1}}{q_{n-1}} = \frac{(q_{n+1} - q_{n-1})(-1)^n}{q_{n+1} q_n q_{n-1}}$. (3)

By the recurrence formula, $q_{n+1} > q_n > q_{n-1}$, and since they are all positive, the sign of (3) depends only upon the sign of $(-1)^n$.

If n is odd, the convergents in the first member of (3) are even convergents and, $(-1)^n$ being negative, their difference is negative; that is, the even convergents form a descending series.

* A **corollary** to a principle is a subordinate principle easily deduced from the main principle or from some part of its proof.

If n is even, the convergents in the first member of (3) are odd convergents and, $(-1)^n$ being positive, their difference is positive; that is, the odd convergents form an ascending series.

522. PRINCIPLE 3. — *Every infinite continued fraction has a single finite value, which is the common limit of the terms of the descending series formed by its even convergents and the terms of the ascending series formed by its odd convergents, as the number of convergents increases without limit.*

The above principle may be established as follows:

By Prin. 1 any even convergent is greater than the preceding odd convergent, which by Prin. 2 is greater than any preceding odd convergent. Therefore, every even convergent is greater than every odd convergent that precedes it.

By Prin. 2 any even convergent is greater than any following even convergent, and by Prin. 1 each of the latter is greater than either of the adjacent odd convergents. Therefore, every even convergent is greater than every odd convergent that follows it.

Hence, *every even convergent is greater than every odd convergent.*

It is evident from the law of formation of the denominators of successive convergents that they form an ascending series, in which $q_1 < q_2 < q_3 < \cdots$.

Therefore, in $$\frac{(-1)^2}{q_2q_1}, \ \frac{(-1)^3}{q_3q_2}, \ \cdots, \ \frac{(-1)^n}{q_nq_{n-1}}, \ \frac{(-1)^{n+1}}{q_{n+1}q_n}, \ \cdots,$$

whose terms, Prin. 1, are the differences of successive convergents, one even and the other odd, as n increases without limit *the nth difference approaches zero as a limit.*

Since every even convergent is greater than every odd convergent, and as the number of convergents taken increases without limit, the difference between successive convergents approaches zero as a limit, *the terms of the descending series of even convergents and the terms of the ascending series of odd convergents approach a common limit, which is the value of the continued fraction itself.*

COROLLARY. — *The value of an infinite continued fraction lies between any two consecutive convergents.*

523. PRINCIPLE 4. — *Any convergent to an infinite continued fraction is nearer the continued fraction than any preceding convergent.*

The above principle may be established as follows:

Let x represent the value of the continued fraction.

To show that the nth convergent is nearer to x than the $(n-1)$th convergent, first find x in terms of these convergents.

By the recurrence formula the $(n+1)$th convergent involves the nth and the $(n-1)$th convergents and the $(n+1)$th *partial* quotient, a_{n+1}. Let k represent the *complete* $(n+1)$th quotient. Since when the complete quotient is substituted for the partial quotient the result is the fraction itself,

$$x = \frac{kp_n + p_{n-1}}{kq_n + q_{n-1}}.$$

Therefore,* $$x \sim \frac{p_{n-1}}{q_{n-1}} = \frac{k(p_nq_{n-1} \sim p_{n-1}q_n)}{q_{n-1}(kq_n + q_{n-1})} = \frac{k}{q_{n-1}(kq_n + q_{n-1})},$$

and $$\frac{p_n}{q_n} \sim x = \frac{p_nq_{n-1} \sim p_{n-1}q_n}{q_n(kq_n + q_{n-1})} = \frac{1}{q_n(kq_n + q_{n-1})}.$$

Since $q_n > q_{n-1}$ and $k > 1$, the difference between the nth convergent and x is less than the difference between the $(n-1)$th convergent and x; that is, any convergent is nearer to the continued fraction than the next preceding convergent, and is nearer, therefore, than any preceding convergent.

524. PRINCIPLE 5. — *Any convergent to a continued fraction is nearer to the value of the continued fraction than any other fraction whose denominator is smaller than that of the convergent.*

The above principle may be established as follows:

Let x be the value of a continued fraction, $\frac{p_n}{q_n}$ its nth convergent, and $\frac{a}{b}$ any other fraction whose terms are positive integers, and whose denominator is less than q_n.

It is to be proved that $\frac{p_n}{q_n}$ is nearer to x than $\frac{a}{b}$.

If possible, let $\frac{a}{b}$ be nearer to x than $\frac{p_n}{q_n}$. Then, Prin. 4, $\frac{a}{b}$ is nearer to x than $\frac{p_{n-1}}{q_{n-1}}$. Therefore, since by Prin. 3, Cor., x lies between the nth and the $(n-1)$th convergents, $\frac{a}{b}$ lies between them.

Hence, $$\frac{a}{b} \sim \frac{p_{n-1}}{q_{n-1}} < \frac{p_n}{q_n} \sim \frac{p_{n-1}}{q_{n-1}},$$

or, Prin. 1, $$\frac{aq_{n-1} \sim bp_{n-1}}{bq_{n-1}} < \frac{1}{q_nq_{n-1}}. \qquad (1)$$

Since $q_n > b$, making the denominators in (1) alike by substituting q_n for b in the first denominator decreases the first fraction.

Hence, in order that $\frac{a}{b}$ may be nearer to x than $\frac{p_n}{q_n}$, we must have

$$aq_{n-1} \sim bp_{n-1} < 1,$$

which is impossible, because a, q_{n-1}, b, and p_{n-1} are integers.

* The sign $\sim$, read 'the difference between,' indicates that the less number is to be subtracted from the greater.

Hence, since $b < q_n$, $\frac{a}{b}$ is not nearer to x than $\frac{p_n}{q_n}$; that is, the nth convergent is nearer to x than any other fraction whose denominator is smaller than that of the nth convergent.

525. Limit of error of the nth convergent.

Since, Prin. 3, Cor., the value of a continued fraction lies between the values of any two consecutive convergents, the error made by taking the nth convergent instead of the whole fraction is less than the difference between the nth convergent and the next convergent. By Prin. 1 this difference is numerically equal to the reciprocal of the product of their denominators. Hence,

PRINCIPLE 6. — *The error made by taking the nth convergent of an infinite continued fraction is less than unity divided by the product of the denominators of the nth and $(n+1)$th convergents.*

Since $$\text{error} < \frac{1}{q_n q_{n+1}},$$

and $$\frac{1}{q_n q_{n+1}} = \frac{1}{q_n(a_{n+1}q_n + q_{n-1})} < \frac{1}{a_{n+1}q_n^2},$$

the error corresponding to the nth convergent is small when a_{n+1}, the next partial quotient, is large. Hence,

COROLLARY. — *Any convergent that immediately precedes a large partial quotient is a near approximation to the value of the continued fraction.*

EXAMPLES

1. Compute the value of $10 + \cfrac{1}{1+}\,\cfrac{1}{4+}\,\cfrac{1}{2+}\,\cfrac{1}{4+}\,\cfrac{1}{1+}\,\cfrac{1}{20+}\,\cfrac{1}{1+\cdots}$ correct to the nearest fourth decimal place.

SOLUTION. — Convergents, $\frac{10}{1}, \frac{11}{1}, \frac{54}{5}, \frac{119}{11}, \frac{530}{49}, \frac{649}{60}, \frac{(\ )}{1249}, \cdots$.

Since the error must be less than $\frac{1}{2}$ of .0001, or less than $\frac{1}{20000}$, by Prin. 6 the first convergent that is sufficiently accurate is $\frac{649}{60}$, whose denominator multiplied by the next denominator exceeds 20000.

Hence, continued fraction $= \frac{649}{60} = 10.8167$, to the nearest ten-thousandth.

2. Find the value of $\pi = 3 + \cfrac{1}{7+}\,\cfrac{1}{15+}\,\cfrac{1}{1+}\,\cfrac{1}{292+}\,\cfrac{1}{1+\cdots}$ to the nearest sixth decimal place.

3. If 2.20462 pounds make 1 kilogram, find six commensurable fractions that represent approximately the ratio of a kilogram to a pound, and estimate the error for each fraction.

526. To convert a quadratic surd into a continued fraction.

Let it be required to convert $2+\sqrt{11}$ into a continued fraction. The largest integer in $2+\sqrt{11}$ is $2+3$, or 5.

$$2+\sqrt{11}=5+\sqrt{11}-3=5+\frac{\sqrt{11}-3}{1}$$

rationalizing the *numerator*,

$$=5+\frac{2}{\sqrt{11}+3}$$

reducing the numerator to 1,

$$=5+\frac{1}{\frac{\sqrt{11}+3}{2}}. \qquad (1)$$

Similarly,

$$\frac{\sqrt{11}+3}{2}=3+\frac{\sqrt{11}-3}{2}=3+\frac{1}{\frac{\sqrt{11}+3}{1}}; \qquad (2)$$

also,

$$\frac{\sqrt{11}+3}{1}=6+\frac{\sqrt{11}-3}{1}=6+\frac{1}{\frac{\sqrt{11}+3}{2}}. \qquad (3)$$

The last denominator in (3) may be transformed by (2), then the last denominator in the result may be transformed by (3), and so on. Substituting the results (2), (3), and so on in (1),

$$2+\sqrt{11}=5+\frac{1}{3+\frac{1}{\frac{\sqrt{11}+3}{1}}} \qquad =5+\frac{1}{3+\frac{1}{6+\frac{1}{\frac{\sqrt{11}+3}{2}}}}$$

$$=5+\frac{1}{3+\frac{1}{6+\frac{1}{3+\frac{1}{\frac{\sqrt{11}+3}{1}}}}} \qquad =5+\frac{1}{3+\frac{1}{6+\frac{1}{3+\frac{1}{6+\cdots}}}}$$

or

$$2+\sqrt{11}=5+\frac{1}{3+}\ \frac{1}{6+}\ \frac{1}{3+}\ \frac{1}{6+\cdots},$$

in which the partial quotients, 3 and 6, *recur*. Such a continued fraction is called a *periodic*, or a *recurring* continued fraction.

By the method just exemplified, *any positive quadratic surd may be converted into a periodic continued fraction.*

527. To convert a periodic continued fraction into a quadratic surd.

1. Let it be required to convert $6+\underset{*}{\dfrac{1}{3+}}\dfrac{1}{\underset{*}{6+}}\dfrac{1}{3+}\dfrac{1}{6+\cdots}$ into a quadratic surd. The recurring part is marked by asterisks.

Let $$x=6+\frac{1}{3+}\frac{1}{6+}\frac{1}{3+}\frac{1}{6+\cdots}. \tag{1}$$

Then, $$x=6+\frac{1}{3+\dfrac{1}{6+}\dfrac{1}{3+\cdots}}=6+\frac{1}{3+\dfrac{1}{x}}. \tag{2}$$

Simplifying, etc., $x^2-6x-2=0$, a quadratic equation whose roots, $3+\sqrt{11}$ and $3-\sqrt{11}$, are quadratic surds, one positive and one negative. Since the given continued fraction is positive, its value x is the positive root, $3+\sqrt{11}$.

NOTE. — The second member of (2), being a *terminating* continued fraction, may be simplified by finding its third convergent.

2. To convert $5+\underset{*}{\dfrac{1}{3+}}\dfrac{1}{6+}\underset{*}{\dfrac{1}{3+}}\dfrac{1}{6+\cdots}$ into a quadratic surd,

let $$x=5+\frac{1}{3+}\frac{1}{6+}\frac{1}{3+}\frac{1}{6+\cdots}.$$

Then, $$x-5=\frac{1}{3+\dfrac{1}{6+\dfrac{1}{3+}\dfrac{1}{6+\cdots}}}=\frac{1}{3+}\frac{1}{6+(x-5)}.$$

Simplifying, etc., $x^2-4x-7=0$, whence $x=2+\sqrt{11}$.

3. To convert $5+\dfrac{1}{4+}\underset{*}{\dfrac{1}{6+}}\dfrac{1}{3+}\underset{*}{\dfrac{1}{6+}}\cdots$ into a quadratic surd, first find the value of the complete quotient whose integral part is the first recurring partial quotient 6.

By 1, $$6+\frac{1}{3+}\frac{1}{6+\cdots}=x=3+\sqrt{11}. \tag{1}$$

Next, put $$y=5+\frac{1}{4+}\underset{*}{\frac{1}{6+}}\frac{1}{3+}\underset{*}{\frac{1}{6+}}\cdots=5+\frac{1}{4+}\frac{1}{x}. \tag{2}$$

Substituting (1) in (2), $y=\frac{1}{7}(40-\sqrt{11})$.

Hence, *every periodic continued fraction is equal to a quadratic surd and is a positive root of a quadratic equation with rational coefficients.*

The proof is as follows:

Let $$y = b_1 + \frac{1}{b_2 +} \cdots \frac{1}{b_n +} \frac{1}{\underset{*}{a_1} +} \frac{1}{a_2 +} \cdots \frac{1}{a_r +} \frac{1}{\underset{*}{a_1} +} \cdots$$

$$= b_1 + \frac{1}{b_2 +} \cdots \frac{1}{b_n +} \frac{1}{x}. \tag{1}$$

In (1), $$x = a_1 + \frac{1}{a_2 +} \cdots \frac{1}{a_r +} \frac{1}{\underset{*}{a_1} +} \cdots = a_1 + \frac{1}{a_2 +} \cdots \frac{1}{a_r +} \frac{1}{x}. \tag{2}$$

Since x equals the $(r+1)$th convergent of (2), by the recurrence formula,

$$x = \frac{xp_r + p_{r-1}}{xq_r + q_{r-1}}. \tag{3}$$

Clearing (3), $$q_r x^2 - (p_r - q_{r-1})x - p_{r-1} = 0,$$

a quadratic in x whose positive real root (§ 304, I) is

$$x = \frac{p_r - q_{r-1} + \sqrt{(p_r - q_{r-1})^2 + 4p_{r-1}q_r}}{2q_r}. \tag{4}$$

Since a_1 recurs, a_1 must be equal to or greater than 1.

$\therefore\ p_r > q_r > q_{r-1}$, $p_r - q_{r-1}$ is a positive integer, and x is real.

To prove that the radical in (4) is a quadratic surd, write

$$\sqrt{(p_r - q_{r-1})^2 + 4p_{r-1}q_r} = \sqrt{(p_r + q_{r-1})^2 + 4(p_{r-1}q_r - p_r q_{r-1})}$$

Prin. 1, formula (1), $$= \sqrt{(p_r + q_{r-1})^2 \pm 4}.$$

Since no positive integral square increased or diminished by 4 is a perfect square, the radical is a quadratic surd.

Hence, x is a quadratic surd.

Therefore, if the value of x is substituted for x in (1) and the result is simplified by repeated rationalization of denominators and reduction to higher terms, y will finally be reduced to the form of a quadratic surd.

Examples

Reduce each of the following to a periodic continued fraction and find a near approximation (§ 525) to its value:

1. $\sqrt{15}$.
2. $\sqrt{126}$.
3. $\sqrt{7}$.
4. $2 + \sqrt{7}$.
5. $\sqrt{21}$.
6. $\sqrt{19}$.
7. $\sqrt{10}$.
8. $1 : \sqrt{10}$.

Reduce the following to quadratic surds:

9. $$2 + \frac{1}{\underset{*}{8} +} \frac{1}{\underset{*}{2} +} \cdots.$$
10. $$1 + \frac{1}{\underset{*}{10} +} \frac{1}{\underset{*}{10} +} \cdots.$$
11. $$1 + \frac{1}{3 +} \frac{1}{\underset{*}{2} +} \frac{1}{\underset{*}{2} +} \cdots.$$
12. $$3 + \frac{1}{\underset{*}{1} +} \frac{1}{1 +} \frac{1}{\underset{*}{1} +} \frac{1}{1 +} \frac{1}{6 +} \frac{1}{\underset{*}{1} +} \cdots.$$

THEORY OF NUMBERS

SCALES OF NOTATION

528. The theory of numbers treats of the properties of positive integers. In this chapter the word number will be used in the sense of positive integer, and the terms integer, even number, odd number, power, root, etc., will be employed in the same sense as in arithmetic, unless the contrary is stated.

529. The Arabic system of notation is called the *decimal* system, because ten units of any order make one unit of the next higher order. 10 is called the *radix* of the *scale* of notation.

Any number in the decimal system may be expressed in a scale of descending powers of 10, the exponent of the highest power being one less than the number of digits of the number.

Thus, $256473 = 200000 + 50000 + 6000 + 400 + 70 + 3$

$= 2(10)^5 + 5(10)^4 + 6(10)^3 + 4(10)^2 + 7(10) + 3.$

530. Any number greater than 1 may be used as the radix of a scale of notation.

The meaning of the expression 256473 in the decimal scale has just been shown. But in the scale whose radix is 8,

$$256473 = 2(8)^5 + 5(8)^4 + 6(8)^3 + 4(8)^2 + 7(8) + 3.$$

In the *binary* scale the radix is 2; in the *ternary*, 3; in the *quaternary*, 4; in the *quinary*, 5; in the *senary*, 6; in the *septenary*, 7; in the *octary*, 8; in the *nonary*, 9; in the *denary*, or *decimal*, 10; in the *undenary*, 11; in the *duodenary*, or *duodecimal*, 12; and so on.

The general symbol for any radix is r.

531. PRINCIPLE. — *Any integer N may be expressed in the scale whose radix is r in one and only one way.*

The above principle may be established as follows:

Divide N by r, and let the quotient be N_1 and the remainder s.

Then, $$N = N_1 r + s. \qquad (1)$$

Divide N_1 by r, and let the quotient be N_2 and the remainder q.

Then, $$N_1 = N_2 r + q,$$

whence, by (1), $$N = N_2 r^2 + qr + s. \qquad (2)$$

Continuing the process, a quotient less than r is finally obtained. Suppose this occurs after $r - 1$ divisions, and denote the last quotient and remainder by a and b, respectively.

Then, $$N = ar^{n-1} + br^{n-2} + \cdots + qr + s.$$

The coefficients $a, b, \cdots, q, s$ are the digits of the number, and since each is a remainder of some division by r, each is less than r. Also, since there can be but one remainder less than r for each division, there is but one way of expressing N in the scale of r.

COROLLARIES. — 1. *The exponent of the highest power of the radix is one less than the number of digits.*

2. *In any scale the number of different characters, including 0, that are required to express all numbers is equal to the radix.*

For example, in the duodecimal scale the ten Arabic figures and two other characters, t for ten and e for eleven, are required; in the quinary scale only the figures 0, 1, 2, 3, 4 are required.

532. To change from the decimal to another scale.

EXAMPLES

1. Change 3010 from the decimal to the senary scale.

PROCESS

$6 \lfloor 3010$
$6 \lfloor 501 \ldots 4$
$6 \lfloor 83 \ldots 3$
$6 \lfloor 13 \ldots 5$
$2 \ldots 1$

EXPLANATION. — Since 6 units of any order make one unit of the next higher order, 3010 units of the first order make 501 units of the second order and 4 units of the first order; 501 units of the second order make 83 units of the third order and 3 units of the second order; and so on.

Hence, 3010 when expressed in the senary scale is the sum of 2 units of the *fifth* order, 1 unit of the *fourth* order, 5 units of the *third* order, 3 units of the *second* order, and 4 units of the *first* order.

For convenience the radix of the scale is indicated by a subscript figure, which may be omitted in the decimal scale. Thus, $3010 = 21534_6$.

2. Express in the octary scale 50, 128, and 5283.

3. Express in the quinary scale 12, 342, and 6627.

4. Express in the duodecimal scale 15, 100, and 6053.

5. Express in the binary scale the numbers from 1 to 10.

533. To change from any scale to the decimal scale.

EXAMPLES

1. Change 21534_6 to the decimal scale.

PROCESS

21534
6
13
6
83
6
501
6
3010

EXPLANATION. — Since each unit of any order is equal to 6 units of the next lower order, 2 units of the fifth order are equal to 12 units of the fourth order, and adding 1, the number of units of the fourth order in 21534_6, the whole number of units of the fourth order is 13.

Continuing in a similar way to reduce the units of each order to units of the next lower order, the whole number of units of the lowest order is found to be 3010, which is expressed in the decimal scale.

Change the following to the decimal scale:

2. 42_7. 3. 6654_8. 4. $4t6_{11}$. 5. $6e4_{12}$. 6. 1111001_2.

534. Arithmetical processes in any scale.

The processes are performed in the same manner as in the decimal scale. The student must simply bear in mind each time the number of units of each order required to make one of the next higher order.

When the process is complicated or when different scales are involved, all the numbers may first be reduced to the decimal scale.

EXAMPLES

Perform the operations indicated:

1. $38_{12} + 45_{12} + e6_{12}$. 3. $4241_5 - 3323_5$. 5. $1304_7 \div 25_7$.

2. $101_2 + 110_2 + 101101_2$. 4. $4e5823_{12} \times 15_{12}$. 6. $\sqrt{1321_4}$.

7. Multiply 21_{12} by 13_5 and express the product in the decimal scale.

8. Show that in any scale the expression 121 represents a perfect square.

9. In what scale is 5 times 6 expressed by 36?

10. In what scale is $\frac{1}{4}$ of the number 100 equal to the number 30?

11. Which of the weights of 1, 2, 4, 8, $\cdots$ pounds must be taken to aggregate 75 pounds, if not more than one of each is used?

PRINCIPLES OF DIVISIBILITY

535. In this subject 'divisible' is used for 'exactly divisible.' Also, since there is no remainder when zero is divided by any number, zero is regarded as exactly divisible by any number.

536. If the number $N = ar^{n-1} + br^{n-2} + \cdots + pr^2 + qr + s$ is divided by r, the remainder is s, the last digit; if N is divided by r^2, the remainder is the number that is expressed by the last two digits; if N is divided by r^3, the remainder is the number that is expressed by the last three digits; and so on.

Likewise, if N is divided by a factor of r, the remainder is the same as that obtained by dividing the last digit by that factor; if N is divided by a factor of r^2, the remainder is the same as that obtained by dividing $qr + s$, the number expressed by the last two digits, by that factor; and so on. Hence,

PRINCIPLE 1. — (a) *If a number in the scale of r is divided by r^m, the remainder is the number that is expressed by the last m digits of the given number.*

(b) *If the number is divided by a factor of r^m, the remainder is the same as that obtained by dividing by that factor the number that is expressed by the last m digits.*

COROLLARIES. — 1. *In the decimal system a number ending in m ciphers is divisible by 10^m.*

2. *In the decimal system*

(a) *Every number ending in* 0 *or* 5 *is divisible by* 5.

(b) *Every number ending in* 00, 25, 50, *or* 75 *is divisible by* 25.

(c) *Every number ending in three ciphers or in three digits that express a multiple of* 125 *is divisible by* 125. *And so on.*

3. *In the decimal system*

(a) *Every number ending in* 0, 2, 4, 6, *or* 8 *is divisible by* 2.

(b) *Every number ending in two ciphers or in two digits that express a multiple of* 4 *is divisible by* 4.

(c) *Every number ending in three ciphers or in three digits that express a multiple of* 8 *is divisible by* 8. *And so on.*

NOTE. — If the radix is odd, the last digit of a number does not indicate whether the number is even or odd. Thus, $11_6 = 6$; $12_5 = 7$; $112_5 = 32$.

537. From $ar^{n-1} + br^{n-2} + \cdots + pr^2 + qr + s$

subtracting $a + b + \cdots + p + q + s$

the result $= a(r^{n-1}-1) + b(r^{n-2}-1) + \cdots + p(r^2-1) + q(r-1)$,

which, § 111, is divisible by $r-1$. Hence,

PRINCIPLE 2. — *The difference between any number and the sum of its digits is divisible by the radix less one.*

COROLLARY. — *In the decimal system the difference between any number and the sum of its digits is divisible by* 9.

538. Since the difference between any number and the sum of its digits is a multiple of $r-1$, r being the radix, and since the number that must be added to this multiple of $r-1$ to produce the given number is the sum of the digits, it follows that:

PRINCIPLE 3. — (a) *The remainder obtained by dividing a number in the scale of* r *by* $r-1$ *is the same as that obtained by dividing the sum of the digits by* $r-1$.

(b) *The remainder obtained by dividing the number by any factor of* $r-1$ *is the same as that obtained by dividing the sum of the digits by that factor.*

COROLLARIES. — 1. *A number in the scale of* r *is divisible by* $r-1$, *if the sum of its digits is divisible by* $r-1$; *or by any factor of* $r-1$, *if the sum of the digits is divisible by that factor.*

2. *In the decimal system*

(a) *Any number is divisible by* 9, *if the sum of its digits is divisible by* 9.

(b) *Any number is divisible by* 3, *if the sum of its digits is divisible by* 3.

(c) *Any even number is divisible by* 6, *if the sum of its digits is divisible by* 3.

The test called *casting out the nines* is an application of Prin. 3. For applications of this test, see the author's *Standard Arithmetic*, page 400.

539. Let $N = ar^{n-1} + \cdots + hr^4 + kr^3 + pr^2 + qr + s.$

Subtracting the coefficients of the even powers of r and also the coefficients of the odd powers of r with their signs changed, and calling the subtrahend d,

$$\begin{array}{lllll} N = s + qr & +pr^2 & +kr^3 & +hr^4 & +\cdots \\ d = s - q & +p & -k & +h & -\cdots \\ \hline N - d = & q(r+1) + p(r^2-1) + k(r^3+1) + h(r^4-1) + \cdots & & & \end{array}$$

By § 111, this result is divisible by $r + 1$.

Then, let $N - d = m(r+1)$, m being an integer.

$$\therefore\ N = m(r+1) + d.$$

Therefore, if d is divisible by $r + 1$, N is also. Hence,

PRINCIPLE 4. — *A number in the scale of r is divisible by $r + 1$, if the difference between the sums of its alternate digits is divisible by $r + 1$.*

COROLLARY. — *In the decimal system any number is divisible by* 11, *if the difference between the sums of its alternate digits is divisible by* 11.

EXAMPLES

Which of the numbers 2, 4, 8, 16, 5, 10, 15, 20, 25, 100, 3, 6, 9, 12, 11, 22, 33 are divisors of the following?

1. 1000.	4. 6250.	7. 522.	10. 54945.
2. 1001.	5. 1620.	8. 275.	11. 10240.
3. 1012.	6. 2673.	9. 729.	12. 80080.

PRIME AND COMPOSITE NUMBERS

540. Suppose that x is prime to a but is a factor of ab.

Since $\frac{a}{x}$ can be converted into a continued fraction that terminates with the nth convergent, if the preceding convergent is $\frac{p}{q}$,

§ 520, (1), $$\frac{a}{x} \sim \frac{p}{q} = \frac{1}{qx}, \text{ or } aq \sim px = 1.$$

$$\therefore\ abq \sim bpx = b.$$

Since ab and x are each divisible by x, the difference between $ab \cdot q$ and $x \cdot bp$, which is b, is divisible by x. Hence,

PRINCIPLE 1. — *Any factor of ab that is prime to a must be a factor of b.*

COROLLARIES. — 1. *If x is prime to a, b, c, $\cdots$, it is prime to their product.*

2. *If a', b', c', $\cdots$ are prime to each of the numbers a, b, c, $\cdots$, then $a'b'c' \cdots$ is prime to $abc \cdots$.*

3. *Powers of different prime numbers or of numbers prime to each other are prime to each other.*

541. By definition, every composite number can be resolved into at least two factors, each greater than 1 and less than the number. If any of these factors is composite, it may be resolved into factors; and if this process is continued far enough, the given number will finally be resolved into prime factors.

To discover whether a composite number has more than one set of prime factors, suppose $N = abc \cdots$, in which $a, b, c, \cdots$ are prime numbers; and if possible, suppose $N = ABC \cdots$, in which $A, B, C, \cdots$ are prime numbers.

Then, $$abc \cdots = ABC \cdots.$$

Since A must divide the product $abc \cdots$, and since $a, b, c, \cdots$ are prime numbers, A must be equal to some one of the factors $a, b, c, \cdots$. Similarly, each of the factors $B, C, \cdots$ must be equal to some one of the factors $a, b, c, \cdots$; that is, each factor in $ABC \cdots$ corresponds to an equal factor in $abc \cdots$. Hence,

PRINCIPLE 2. — *A composite number may be resolved into one and only one set of prime factors.*

COROLLARY. — *Every composite number has at least one factor equal to or less than its square root.*

Therefore, if a number has no divisor equal to or less than its square root, the number is prime.

542. By § 497, IV, the number of combinations of n different things taken r at a time is $\dfrac{n(n-1)(n-2)\cdots \text{ to } r \text{ factors}}{1 \cdot 2 \cdot 3 \cdots r}$.

Since the number of combinations of n different things taken r at a time must be a whole number,

PRINCIPLE 3. — *The product of any r consecutive integers is divisible by $\underline{|r}$.*

COROLLARIES. — 1. *If* $N = \dfrac{n(n-1)(n-2)\cdots(n-r+1)}{\lfloor r}$, *every prime factor of the numerator that is greater than* r *is a factor of* N.

2. *If* n *is a positive integral exponent, the binomial coefficients* $\dfrac{n}{1}, \dfrac{n(n-1)}{1\cdot 2}, \dfrac{n(n-1)(n-2)}{1\cdot 2\cdot 3}, \cdots$, *are integers.*

EXAMPLES

1. Show that $n^2 - n$ is an even number when n is integral.

PROOF

The integer n must be even or else odd.

Every even number has the form $2p$. p being an integer, and every odd number has the form $2p + 1$ or the equivalent form $2(p-1)+1$, or $2p - 1$.

If n is even, let $n = 2p$.

Then, $n^2 - n = n(n-1) = 2p(2p-1)$, an even number.

If n is odd, let $n = 2p + 1$.

Then, $n^2 - n = n(n-1) = (2p+1)(2p)$, an even number.

Hence, whether n is even or odd, $n^2 - n$ is even.

Or, again, by Prin. 3 the product of any two consecutive integers is divisible by $\lfloor 2$. Hence, $n^2 - n$, or $n(n-1)$, is even.

2. Show that every perfect cube belongs to one of the forms $7n, 7n+1, 7n-1$.

PROOF

Every integer must belong to one of the forms $7p$, $7p \pm 1$, $7p \pm 2$, $7p \pm 3$; for $7p + 4 = 7(p+1) - 3$, which has the same form as $7p - 3$ and $7p - 4 = 7(p-1) + 3$, which has the same form as $7p + 3$; and similarly, $7p \pm 5$ and $7p \pm 6$ may be reduced to the forms $7p \pm 2$, and $7p \pm 1$ respectively.

$$(7p)^3 = 343p^3 = 7(49p^3) = 7n.$$

$$(7p \pm 1)^3 = 343p^3 \pm 147p^2 + 21p \pm 1$$
$$= 7(49p^3 \pm 21p^2 + 3p) \pm 1 = 7n \pm 1.$$

$$(7p \pm 2)^3 = 343p^3 \pm 294p^2 + 84p \pm 8$$
$$= 7(49p^3 \pm 42p^2 + 12p \pm 1) \pm 1 = 7n \pm 1.$$

$$(7p \pm 3)^3 = 343p^3 \pm 441p^2 + 189p \pm 27$$
$$= 7(49p^3 \pm 63p^2 + 27p \pm 4) \mp 1 = 7n \mp 1.$$

CAUTION. — Not every number belonging to one of these forms is a perfect cube. For example, $7(6) + 1$, or 43, is not a perfect cube.

3. Find what rational values of x will make $x^2 - 3x + 5$ a perfect square.

SOLUTION

Let $$x^2 - 3x + 5 = (x - m)^2.$$

Solving, $$x = \frac{m^2 - 5}{2m - 3},$$

which is rational for all rational values of m.

Thus, substituting $\cdots, -4, -3, -2, -1, 0, 1, 2, 3, 4, \cdots$ for m,

$$x = \cdots, -1, -\tfrac{4}{5}, \tfrac{1}{7}, \tfrac{4}{5}, \tfrac{5}{3}, 4, -1, \tfrac{4}{3}, \tfrac{11}{5}, \cdots.$$

Any of these values substituted renders $x^2 - 3x + 5$ a perfect square.

4. Find which of the numbers 431, 211, 253, 301, 623, 323 are prime and factor the others.

5. Of the first ten numbers beginning with 1001, which are composite?

Prove the following:

6. The sum of any number of even numbers is even.

7. The sum or difference of two odd numbers is even.

8. The difference between the squares of two odd numbers is divisible by 8.

9. The difference between a number and its cube is divisible by 6.

10. The number $n^5 - 5n^3 + 4n$ is divisible by 120.

11. Every perfect square has one of the forms $3n$, $3n + 1$.

12. Every perfect square has one of the forms $4n$, $4n + 1$.

13. Every prime number except 2 and 3 belongs to one of the forms $6n + 1$, $6n - 1$.

14. What rational values of x will make $x^2 + 5x + 2$ a perfect square?

15. What values of x will rationalize $\sqrt{ax + b}$?

SUGGESTION. — Put $\sqrt{ax + b} = m$.

16. What is the least multiplier that will make 33957 a perfect square? a perfect cube?

SUGGESTION. — Put the number into the form $a^p b^q c^r \cdots$ and examine the exponents of each factor.

DETERMINANTS

543. Solving the simultaneous independent equations

$$\begin{cases} a_1x + b_1y = k_1, \\ a_2x + b_2y = k_2, \end{cases} \tag{1}$$

we have $$x = \frac{k_1b_2 - k_2b_1}{a_1b_2 - a_2b_1}, \quad y = \frac{a_1k_2 - a_2k_1}{a_1b_2 - a_2b_1}.$$

Comparing the values of x and y it is observed that:

1. They have the same denominator.

2. The numerator of the value of x may be formed from the denominator by replacing the coefficients of x by the corresponding known terms k_1 and k_2.

3. The numerator of the value of y may be formed from the denominator by replacing the coefficients of y by the corresponding known terms k_1 and k_2.

The common denominator $a_1b_2 - a_2b_1$ is called the **determinant of the system.**

A convenient symbol for $a_1b_2 - a_2b_1$, suggested by the arrangement in (1) of the coefficients of x and y in two columns and two rows, is

$$\begin{vmatrix} a_1 & b_1 \\ a_2 & b_2 \end{vmatrix},$$

called a **determinant of the second order.**

$a_1b_2 - a_2b_1$ is called the *developed form*, or the **development**, of this determinant.

a_1b_2 and $-a_2b_1$ are called its **constituents.**

a_1, a_2, b_1, b_2 are called its **elements.**

NOTE. — Some authors employ the terms *element* and *constituent* with the meanings here given to *constituent* and *element*, respectively.

544. To develop a determinant of the second order.

By definition, $\begin{vmatrix} a_1 & b_1 \\ a_2 & b_2 \end{vmatrix} = a_1 b_2 - a_2 b_1.$

The second member may be written $b_2 a_1 - b_1 a_2$, or $-b_1 a_2 + a_1 b_2$, etc.

1. The *positive* term, $a_1 b_2$ or $b_2 a_1$, is obtained by multiplying the element a_1 in the *first* column and *first* row by the element b_2 in the *next* column and *next* row; or by multiplying the element b_2 in the *second* column and *second* row by the element a_1 in the *preceding* column and *preceding* row.

The selection of an element from any column or row before the selection of an element from a preceding column or row constitutes an **inversion.**

Then, the positive term formed in the first way presents no inversions, but formed in the second way presents two inversions, namely, the selection of an element from the second column before that of an element from the preceding column, and the selection of an element from the second row before that of an element from the preceding row.

In either case the positive term of the development presents an even number of inversions.

2. The negative term, $-a_2 b_1$, or $-b_1 a_2$, is obtained by multiplying the element a_2 in the *first* column and *second* row by the element b_1 in the *second* column and *first* row, and making the product negative; or by selecting the elements in the reverse order and making the product negative. In the first way there is an inversion of rows, in the second way, an inversion of columns.

In either case the negative term of the development presents an odd number of inversions.

545. Any square array of n^2 elements arranged in n columns and n rows represents a **determinant of the *n*th order.**

In harmony with the principles of the preceding article a **determinant of any order** is now defined as a square array of numbers that, by common agreement, represents the algebraic sum of all the products, or constituents, that can be formed by taking one element, but not more than one, from each column and from each

row, making constituents that present an *even* number of inversions *positive* and constituents that present an *odd* number of inversions *negative*.

546. Development of any determinant.

Let $\begin{vmatrix} a_1 & b_1 & c_1 \\ a_2 & b_2 & c_2 \\ a_3 & b_3 & c_3 \end{vmatrix}$ be a determinant of the third order.

By the definition of a determinant, each constituent of this determinant contains three elements as factors, one and only one taken from each column and from each row.

Hence, the constituents involving a_1 are $a_1b_2c_3$ and $-a_1b_3c_2$, the latter being negative because it presents one inversion. Therefore, the sum of the constituents involving a_1 is

$$a_1b_2c_3 - a_1b_3c_2, \text{ or } a_1\begin{vmatrix} b_2 & c_2 \\ b_3 & c_3 \end{vmatrix},$$

which may be obtained from the given determinant by canceling or *deleting* the elements that cannot be associated with a_1,

thus:
$$\begin{matrix} a_1 & \cancel{b_1} & \cancel{c_1} \\ \cancel{a_2} & b_2 & c_2 \\ \cancel{a_3} & b_3 & c_3 \end{matrix}$$

The determinant of the next lower order $\begin{vmatrix} b_2 & c_2 \\ b_3 & c_3 \end{vmatrix}$ by which a_1 is multiplied is called the **minor** of the element a_1. When the minor is given the proper sign, in this case $+$, it is called the **co-factor** of the element.

Similarly, the sum of the constituents involving a_2 is

$$-a_2\begin{vmatrix} b_1 & c_1 \\ b_3 & c_3 \end{vmatrix},$$

derived by deleting the elements that cannot be associated with a_2,

thus:
$$\begin{matrix} \cancel{a_1} & b_1 & c_1 \\ a_2 & \cancel{b_2} & \cancel{c_2} \\ \cancel{a_3} & b_3 & c_3 \end{matrix}$$

and giving a_2 the sign $-$, because in each constituent a_2 is chosen before an element of the preceding row.

In this case, since $-a_2\begin{vmatrix} b_1 & c_1 \\ b_3 & c_3 \end{vmatrix} = a_2 \times -\begin{vmatrix} b_1 & c_1 \\ b_3 & c_3 \end{vmatrix}$, the co-factor of a_2 is negative.

Similarly, the sum of the constituents involving a_3 is

$$a_3\begin{vmatrix} b_1 & c_1 \\ b_2 & c_2 \end{vmatrix}.$$

Since each constituent of the given determinant must involve either a_1, a_2, or a_3, we have found all the constituents. Hence,

$$\begin{vmatrix} a_1 & b_1 & c_1 \\ a_2 & b_2 & c_2 \\ a_3 & b_3 & c_3 \end{vmatrix} = a_1\begin{vmatrix} b_2 & c_2 \\ b_3 & c_3 \end{vmatrix} - a_2\begin{vmatrix} b_1 & c_1 \\ b_3 & c_3 \end{vmatrix} + a_3\begin{vmatrix} b_1 & c_1 \\ b_2 & c_2 \end{vmatrix}$$

$$= a_1b_2c_3 - a_1b_3c_2 - a_2b_1c_3 + a_2b_3c_1 + a_3b_1c_2 - a_3b_2c_1.$$

The same result is obtained by using any column or any row of elements as the first column is used above.

For example, selecting the elements of the second column,

$$\begin{vmatrix} a_1 & b_1 & c_1 \\ a_2 & b_2 & c_2 \\ a_3 & b_3 & c_3 \end{vmatrix} = -b_1\begin{vmatrix} a_2 & c_2 \\ a_3 & c_3 \end{vmatrix} + b_2\begin{vmatrix} a_1 & c_1 \\ a_3 & c_3 \end{vmatrix} - b_3\begin{vmatrix} a_1 & c_1 \\ a_2 & c_2 \end{vmatrix}$$

$$= -a_2b_1c_3 + a_3b_1c_2 + a_1b_2c_3 - a_3b_2c_1 - a_1b_3c_2 + a_2b_3c_1,$$

which is the former result differently arranged.

The above discussion applies to a determinant of any order. Hence,

The development of a determinant of any order is equal to the algebraic sum of the products of the elements of any column or row and their respective co-factors.

547. The minors corresponding to the elements a_1, a_2, ..., b_1, b_2, ..., are denoted by A_1, A_2, ..., B_1, B_2, ...

548. **Number of constituents.**

Since the co-factors of each of the n elements in any selected column or row of a determinant of the nth order are determinants of the $(n-1)$th order, a determinant of the nth order has n times as many constituents as a determinant of the $(n-1)$th order; this, in turn, has $(n-1)$ times as many constituents as a determinant of the $(n-2)$th order; and so on, until a determinant of the 2d order is reached, which has 2 constituents. Hence,

A determinant of the nth order has $n(n-1)(n-2)\cdots 2$, *or* $\underline{|n}$, *constituents.*

Examples

1. Develop the determinant $\begin{vmatrix} 6 & 9 & 8 \\ 10 & 11 & 12 \\ 14 & 15 & 16 \end{vmatrix}$.

Solution. — Multiplying the elements of the first column by their co-factors, and adding, the given determinant is reduced to

$$6\begin{vmatrix} 11 & 12 \\ 15 & 16 \end{vmatrix} - 10\begin{vmatrix} 9 & 8 \\ 15 & 16 \end{vmatrix} + 14\begin{vmatrix} 9 & 8 \\ 11 & 12 \end{vmatrix} = -24 - 240 + 280 = 16.$$

2. Develop the determinant $\begin{vmatrix} 1 & 2 & 3 & 4 \\ 5 & 6 & 9 & 8 \\ 9 & 10 & 11 & 12 \\ 3 & 14 & 15 & 16 \end{vmatrix}$.

Solution. — Proceeding as in Ex. 1, the given determinant is reduced to

$$1\begin{vmatrix} 6 & 9 & 8 \\ 10 & 11 & 12 \\ 14 & 15 & 16 \end{vmatrix} - 5\begin{vmatrix} 2 & 3 & 4 \\ 10 & 11 & 12 \\ 14 & 15 & 16 \end{vmatrix} + 9\begin{vmatrix} 2 & 3 & 4 \\ 6 & 9 & 8 \\ 14 & 15 & 16 \end{vmatrix} - 3\begin{vmatrix} 2 & 3 & 4 \\ 6 & 9 & 8 \\ 10 & 11 & 12 \end{vmatrix}.$$

Since by Ex. 1 the first determinant is equal to 16, the given determinant

$$= 16 - 5\cdot 2\begin{vmatrix} 11 & 12 \\ 15 & 16 \end{vmatrix} - 5(-10)\begin{vmatrix} 3 & 4 \\ 15 & 16 \end{vmatrix} - 5\cdot 14\begin{vmatrix} 3 & 4 \\ 11 & 12 \end{vmatrix}$$
$$+ 9\cdot 2\begin{vmatrix} 9 & 8 \\ 15 & 16 \end{vmatrix} + 9(-6)\begin{vmatrix} 3 & 4 \\ 15 & 16 \end{vmatrix} + 9\cdot 14\begin{vmatrix} 3 & 4 \\ 9 & 8 \end{vmatrix}$$
$$- 3\cdot 2\begin{vmatrix} 9 & 8 \\ 11 & 12 \end{vmatrix} - 3(-6)\begin{vmatrix} 3 & 4 \\ 11 & 12 \end{vmatrix} - 3\cdot 10\begin{vmatrix} 3 & 4 \\ 9 & 8 \end{vmatrix}$$
$$= 16 + 40 - 600 + 560 + 432 + 648 - 1512 - 120 - 144 + 360$$
$$= -320.$$

Develop the following determinants:

3. $\begin{vmatrix} 4 & 9 & 2 \\ 3 & 5 & 7 \\ 8 & 1 & 6 \end{vmatrix}$.

*__4.__ $\begin{vmatrix} 1 & 7 & 1 \\ 3 & 3 & 3 \\ 5 & \bar{1} & 5 \end{vmatrix}$.

5. $\begin{vmatrix} 3 & 2 & \bar{1} \\ 4 & 8 & \bar{3} \\ 5 & \bar{2} & 1 \end{vmatrix}$.

6. $\begin{vmatrix} 3 & 2 & 0 & 0 \\ 6 & 4 & 1 & \bar{1} \\ 1 & \bar{2} & 2 & 3 \\ 4 & 3 & 2 & \bar{2} \end{vmatrix}$.

7. $\begin{vmatrix} 3 & 4 & 2 & 5 \\ 0 & 3 & 1 & 2 \\ 0 & 1 & \bar{2} & 1 \\ 2 & 0 & 2 & 7 \end{vmatrix}$.

8. $\begin{vmatrix} 1 & \bar{1} & 1 & \bar{1} \\ 0 & 4 & 2 & 7 \\ 0 & 3 & 2 & 7 \\ 0 & 2 & 2 & 1 \end{vmatrix}$.

9. $\begin{vmatrix} 2 & 0 & 0 & 0 \\ 3 & 2 & 2 & 1 \\ 2 & \bar{1} & \bar{2} & 1 \\ 1 & 3 & 5 & 1 \end{vmatrix}$.

* For economy of space the sign of a negative element may be written above the element.

10. Express $an^2 - 2a - bmn + 2bc + mx - ncx$ as a determinant.

SOLUTION

Since there are 6, or $\underline{3}$, constituents, it is likely that the required determinant is of the third order, and that the terms $-2a$ and mx have a factor 1 or -1 unexpressed.

$$an^2 - 2a - bmn + 2bc + mx - ncx$$
$$= a(n \cdot n - 2 \cdot 1) - b(m \cdot n - 2 \cdot c) + x(m \cdot 1 - n \cdot c)$$
$$= a\begin{vmatrix} n & 1 \\ 2 & n \end{vmatrix} - b\begin{vmatrix} m & c \\ 2 & n \end{vmatrix} + x\begin{vmatrix} m & c \\ n & 1 \end{vmatrix} = \begin{vmatrix} a & m & c \\ b & n & 1 \\ x & 2 & n \end{vmatrix}.$$

Express as determinants:

11. $25 - 21$.

12. $42 + 33$.

13. $ab - cd$.

14. $a^2 - b^2$.

15. $a + x$.

16. $b^2 + 1$.

17. $(a^2 - b^2) - c^2$.

18. $1 - (x^3 + 1)$.

19. $m^3 - (n^3 - n)$.

20. $x_1(y_2 - y_3) + x_2(y_3 - y_1) + x_3(y_1 - y_2)$.

21. $a^3 - abc - abc + b^3 + c^2x - abx$.

22. $abc - axy - acx + xyz + abx - b^2z$.

23. $a\begin{vmatrix} 3 & a & c \\ 4 & 2 & c \\ 5 & a & b \end{vmatrix} - b\begin{vmatrix} 2 & 1 & b \\ 4 & 2 & c \\ 5 & a & b \end{vmatrix} + c\begin{vmatrix} 2 & 1 & b \\ 3 & a & c \\ 5 & a & b \end{vmatrix} - a\begin{vmatrix} 2 & 1 & b \\ 3 & a & c \\ 4 & 2 & c \end{vmatrix}$.

REDUCTION OF DETERMINANTS

549. A determinant that is equal to zero is called a **vanishing determinant.**

550. 1. How does $\begin{vmatrix} 5 & 4 \\ 2 & 3 \end{vmatrix}$ compare in form and value with $\begin{vmatrix} 5 & 2 \\ 4 & 3 \end{vmatrix}$? $\begin{vmatrix} 7 & 4 \\ 2 & 1 \end{vmatrix}$ with $\begin{vmatrix} 7 & 2 \\ 4 & 1 \end{vmatrix}$? $\begin{vmatrix} 6 & 9 \\ 8 & 4 \end{vmatrix}$ with $\begin{vmatrix} 6 & 8 \\ 9 & 4 \end{vmatrix}$?

$\begin{vmatrix} 2 & 8 & 1 \\ 3 & 5 & 6 \\ 7 & 3 & 4 \end{vmatrix}$ with $\begin{vmatrix} 2 & 3 & 7 \\ 8 & 5 & 3 \\ 1 & 6 & 4 \end{vmatrix}$? $\begin{vmatrix} a_1 & b_1 & c_1 \\ a_2 & b_2 & c_2 \\ a_3 & b_3 & c_3 \end{vmatrix}$ with $\begin{vmatrix} a_1 & a_2 & a_3 \\ b_1 & b_2 & b_3 \\ c_1 & c_2 & c_3 \end{vmatrix}$?

2. How is the value of a determinant affected by changing the rows into columns and the columns into rows?

PRINCIPLE 1. — *The value of a determinant is not changed by changing its columns into rows and its rows into columns, provided that their order of succession is not changed.*

The above principle may be established as follows:

Since the 1st, 2d, ···, nth columns become the 1st, 2d, ···, **nth rows, respectively**, and *vice versa*, the relative position of the elements is not changed.

Therefore, each element of any column or row has the same co-factor as before the reduction. Hence, the value of the determinant is not changed.

COROLLARY. — *Whatever is true of the columns of a determinant is true of its rows, and vice versa.*

551. 1. What is the value of

$$\begin{vmatrix} 3 & 0 \\ 2 & 0 \end{vmatrix}? \quad \text{of} \quad \begin{vmatrix} 0 & 3 & 1 \\ 0 & 2 & 7 \\ 0 & 4 & 2 \end{vmatrix}? \quad \text{of} \quad \begin{vmatrix} 3 & 2 & 5 \\ 0 & 0 & 0 \\ 4 & 1 & 6 \end{vmatrix}?$$

2. What is the value of a determinant if all the elements of one column or row are zeros?

PRINCIPLE 2. — *A determinant that has one or more columns or rows of zeros is equal to zero.*

For since each constituent must have for a factor an element of the column or row whose elements are zeros, each constituent is equal to zero.

552. 1. How does $\begin{vmatrix} 3 & 4 \\ 5 & 8 \end{vmatrix}$ compare in form and value with $\begin{vmatrix} 9 & 4 \\ 15 & 8 \end{vmatrix}?$ with $\begin{vmatrix} 9 & 12 \\ 5 & 8 \end{vmatrix}?$ with $\begin{vmatrix} 3 & 1 \\ 5 & 2 \end{vmatrix}?$

2. What is the effect of multiplying or dividing all the elements in a column or row by the same number?

PRINCIPLE 3. — *Multiplying or dividing all the elements in a column or row of a determinant by the same number multiplies or divides the determinant by that number.* (§ 85, § 104, 3.)

COROLLARY. — *Changing the signs of all the elements in one column or row changes the sign of the determinant.*

553. 1. How are $\begin{vmatrix} 5 & 3 \\ 8 & 4 \end{vmatrix}$ and $\begin{vmatrix} 4 & 8 \\ 3 & 5 \end{vmatrix}$ formed from $\begin{vmatrix} 3 & 5 \\ 4 & 8 \end{vmatrix}?$ How do they compare with the latter in value?

2. Show that $\begin{vmatrix} 1 & 2 & 3 \\ 5 & 6 & 7 \\ 9 & 4 & 10 \end{vmatrix} = - \begin{vmatrix} 1 & 3 & 2 \\ 5 & 7 & 6 \\ 9 & 10 & 4 \end{vmatrix} = \begin{vmatrix} 3 & 1 & 2 \\ 7 & 5 & 6 \\ 10 & 9 & 4 \end{vmatrix}.$

PRINCIPLE 4. — *The interchange of any two columns or of any two rows of a determinant changes the sign of the determinant.*

The above principle may be established as follows:

Let D be a determinant of the nth order and D' a determinant formed by interchanging any two columns of D.

It is to be proved that $D' = -D$.

By the definition of a determinant, § 545, the elements forming each constituent may be selected from the columns in any order we please, taking one but not more than one from each column and row, provided each constituent so formed is given the proper sign showing the even or odd number of inversions of the established order of columns and rows.

Then, let the last two elements of each constituent be chosen from the two columns to be interchanged in the order in which these columns stand, giving the result the proper sign. By this method, when the columns have been interchanged, each constituent will have one more inversion than before, namely, the inversion in the order of the last two columns.

Hence, the sign of each constituent will be changed by interchanging the two columns, and by the Distributive Law this changes the sign of D; that is, $D' = -D$.

554. By changing places successively with each of the preceding columns, any column may be made the *leading column*, provided, Prin. 4, that when the number of columns supplanted by the advancing column is *odd* the sign of the determinant is changed.

Since the same is true of the advance of any row to the position of *leading row*, any element may be brought to the position of *leading element* by a proper number of advances of its column and row, provided that the sign of the determinant is changed when the sum of the number of columns and the number of rows preceding the column and row in which the element stands is *odd*.

Therefore, since the co-factor of the leading element is always positive, *the sign of the co-factor of any element is + when the combined number of columns and rows preceding the column and row of the element is even, and — when this number is odd.*

Thus, in the determinant $\begin{vmatrix} 1 & 2 & 3 \\ 4 & 5 & 6 \\ 7 & 8 & 9 \end{vmatrix}$ the co-factor of 4 is negative; of 2, negative; of 5, positive; of 6, negative; of 7, positive; etc.

555. The preceding principle suggests a device for developing a determinant of the third order.

In $\begin{vmatrix} a_1 & b_1 & c_1 \\ a_2 & b_2 & c_2 \\ a_3 & b_3 & c_3 \end{vmatrix}$ draw diagonals, thus: 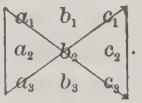

.

The constituents $a_1b_2c_3$ and $-a_3b_2c_1$, whose elements lie on the diagonals, are called the **principal diagonal** and the **secondary diagonal,** respectively. In a determinant of the third order the principal diagonal is *positive* and the secondary diagonal is *negative.*

To find the other positive and negative constituents, by two interchanges of columns, and again by two, we have

$$\begin{vmatrix} a_1 & b_1 & c_1 \\ a_2 & b_2 & c_2 \\ a_3 & b_3 & c_3 \end{vmatrix} = \begin{vmatrix} b_1 & c_1 & a_1 \\ b_2 & c_2 & a_2 \\ b_3 & c_3 & a_3 \end{vmatrix} = \begin{vmatrix} c_1 & a_1 & b_1 \\ c_2 & a_2 & b_2 \\ c_3 & a_3 & b_3 \end{vmatrix}.$$

The principal diagonals of these determinants are the three positive constituents of the given determinant and the secondary diagonals are the three negative constituents.

The three equal determinants and their diagonals are written in the form

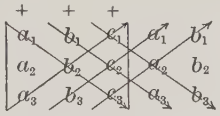

in which *the principal diagonals are positive and the secondary diagonals are negative.*

CAUTION. — This device does not apply to determinants of a higher order than the third.

556. 1. What is the value of

$$\begin{vmatrix} 5 & 5 \\ 3 & 3 \end{vmatrix} ? \quad \text{of} \quad \begin{vmatrix} 7 & 5 & 5 \\ 8 & 3 & 3 \\ 1 & 2 & 2 \end{vmatrix} ? \quad \text{of} \quad \begin{vmatrix} 7 & 5 & 10 \\ 8 & 3 & 6 \\ 1 & 2 & 4 \end{vmatrix} ?$$

2. Form other determinants each with two columns or rows alike or differing by a constant multiplier. What value has each ?

PRINCIPLE 5. — *If the corresponding elements in any two columns or rows of a determinant are the same, or if the elements in one column or row are equimultiples of the corresponding elements in the other, the determinant is equal to zero.*

The above principle may be established as follows:

1. Let D be a determinant having two identical columns or rows.

By Prin. 4, if these two columns or rows are interchanged the sign of the determinant will be changed, giving $-D$. But since the two columns or rows are identical, interchanging them does not change the determinant.

Hence, $D = -D$. But $D = -D$ only when $D = 0$. Therefore, $D = 0$.

2. Let the elements in one column or row be m times the corresponding elements in another column or row, and, Prin. 3, let the determinant be represented by mD.

Then, as in 1, $mD = -mD$,

which is true only when $D = 0$, for m is not equal to zero.

557. To what determinant of the second order is $\begin{vmatrix} a_1 & b_1 & c_1 \\ a_2 & b_2 & c_2 \\ a_3 & b_3 & c_3 \end{vmatrix}$ equal if $a_2 = 0$ and $a_3 = 0$? if $b_1 = 0$ and $c_1 = 0$? if $b_2 = 0$ and $c_2 = 0$? if all the elements but one in any column or row are equal to zero?

PRINCIPLE 6. — *If all the elements but one in any column or row of a determinant are equal to zero, the determinant is equal to a single determinant of the next lower order, namely, the product of the element and its co-factor.*

For each of the co-factors corresponding to the other elements in that column or row has the coefficient 0, and so becomes 0.

558. By Prin. 6, any determinant may be written as the minor of the element 1 or -1 of a determinant of the next higher order equal to the given determinant, provided that the other elements in the same column or row as 1 or -1 are zeros.

Thus, $\begin{vmatrix} a & b \\ c & d \end{vmatrix} = \begin{vmatrix} 1 & * & * \\ 0 & a & b \\ 0 & c & d \end{vmatrix}$, or $\begin{vmatrix} a & b & * \\ c & d & * \\ 0 & 0 & 1 \end{vmatrix}$, or $\begin{vmatrix} * & a & b \\ 1 & 0 & 0 \\ * & c & d \end{vmatrix}$,

in which each asterisk stands for any finite number.

559. 1. If $D = \begin{vmatrix} a+b & 3 \\ c+d & 5 \end{vmatrix}$, show that $D = (5a - 3c) + (5b - 3d)$.

2. Write $5a - 3c$ and $5b - 3d$ as determinants, each having the same second column as D.

3. Into what two determinants, then, may D be resolved?

PRINCIPLE 7. — *If each element of any column or row of a determinant is compound, the determinant may be written as the algebraic sum of two or more determinants.* (§ 85.)

560. It follows from Prin. 7 that if two or more determinants differ only in the elements of one column or row, they may be united into a single determinant.

Thus, $\begin{vmatrix} 5 & 2 & 3 \\ 2 & 4 & 3 \\ 1 & 5 & 4 \end{vmatrix} + \begin{vmatrix} -3 & 2 & 3 \\ 1 & 4 & 3 \\ -1 & 5 & 4 \end{vmatrix} = \begin{vmatrix} 5-3 & 2 & 3 \\ 2+1 & 4 & 3 \\ 1-1 & 5 & 4 \end{vmatrix} = \begin{vmatrix} 2 & 2 & 3 \\ 3 & 4 & 3 \\ 0 & 5 & 4 \end{vmatrix}$.

561. 1. Separate $\begin{vmatrix} 5-3 & 3 & 10 \\ 6-4 & 4 & 20 \\ 8-7 & 7 & 30 \end{vmatrix}$ into two determinants. What is the value of the second determinant?

2. Separate $\begin{vmatrix} 5-3 & 3 & 10-12 \\ 6-4 & 4 & 20-16 \\ 8-7 & 7 & 30-28 \end{vmatrix}$ into four determinants. What is the value of each? Then, what simpler form has $\begin{vmatrix} 5 & 3 & 10 \\ 6 & 4 & 20 \\ 8 & 7 & 30 \end{vmatrix}$?

PRINCIPLE 8. — *If the elements of any column of a determinant are increased or diminished by the corresponding elements or by equimultiples of the corresponding elements of any other column, the value of the determinant is not changed.*

The same is true of any two rows.

The above principle may be established as follows:

Let $\begin{vmatrix} a_1 & b_1 & \cdots & k_1 \\ a_2 & b_2 & \cdots & k_2 \\ \cdots & \cdots & \cdots & \cdots \\ a_n & b_n & \cdots & k_n \end{vmatrix}$ be any determinant,

and let m be any positive or negative number.

1. Suppose that the elements of the second column are multiplied by m and added to the corresponding elements of the first column.

Then, by Prin. 7, the resulting determinant is resolved thus:

$$\begin{vmatrix} a_1 + mb_1 & b_1 & \cdots & k_1 \\ a_2 + mb_2 & b_2 & \cdots & k_2 \\ \cdots & \cdots & \cdots & \cdots \\ a_n + mb_n & b_n & \cdots & k_n \end{vmatrix} = \begin{vmatrix} a_1 & b_1 & \cdots & k_1 \\ a_2 & b_2 & \cdots & k_2 \\ \cdots & \cdots & \cdots & \cdots \\ a_n & b_n & \cdots & k_n \end{vmatrix} + \begin{vmatrix} mb_1 & b_1 & \cdots & k_1 \\ mb_2 & b_2 & \cdots & k_2 \\ \cdots & \cdots & \cdots & \cdots \\ mb_n & b_n & \cdots & k_n \end{vmatrix}$$

Prin. 5, $= D + 0 = D.$

2. Let the modified column be any column after the first, say the rth.

Then, by r interchanges of columns the modified column may be made the leading column, and the determinant may be resolved as in 1, into $D + 0$ or $-D + 0$, according as the number of columns preceding the rth is even or odd. In either case by restoring the leading column to its original position the result obtained will be D, the given determinant.

3. A similar proof may be given for modifying any row.

Examples

1. Evaluate the determinant $\begin{vmatrix} 2 & \bar{3} & 4 & \bar{1} \\ 4 & 2 & \bar{1} & 2 \\ 1 & \bar{1} & 2 & 3 \\ 5 & 0 & 3 & 10 \end{vmatrix}$.

Solution

$$*\begin{vmatrix} 2 & \bar{3} & 4 & \bar{1} \\ 4 & 2 & \bar{1} & 2 \\ 1 & \bar{1} & 2 & 3 \\ 5 & 0 & 3 & 10 \end{vmatrix} = \begin{vmatrix} \bar{1} & 0 & \bar{2} & \overline{10} \\ 6 & 0 & 3 & 8 \\ 1 & \bar{1} & 2 & 3 \\ 5 & 0 & 3 & 10 \end{vmatrix} * \begin{vmatrix} \bar{1} & \bar{2} & \overline{10} \\ 6 & 3 & 8 \\ 5 & 3 & 10 \end{vmatrix} = \begin{vmatrix} 1 & \bar{2} & \overline{10} \\ 0 & \bar{9} & \overline{52} \\ 0 & \bar{7} & \overline{40} \end{vmatrix} = -\begin{vmatrix} \bar{9} & \overline{52} \\ \bar{7} & \overline{40} \end{vmatrix} = 4.$$

Explanation. — The aim is to reduce each determinant in turn to a determinant of the next lower order (Prin. 6) by adding such multiples of the elements of some column or row to the corresponding elements of one or more other columns or rows (Prin. 8) that all of the elements but one in some row or column of the resulting determinant shall be zeros. The column or row, multiples of whose elements are added (or subtracted), may be called an *operating* column or row and is marked with an asterisk.

Thus, selecting the third row for an operator, we subtract 3 times the operator from the first row, obtaining $\bar{1}\ 0\ \bar{2}\ \overline{10}$; and add 2 times the operator to the second row, obtaining 6 0 3 8. The operator itself must be brought down unchanged, in order that the parts added or subtracted may be vanishing determinants.

Since all the elements except -1 in the second column of the resulting determinant are zeros, this determinant (Prin. 6) is equal to -1 times its cofactor, which is negative, because, § 554, the element -1 is preceded by elements in an odd number of columns and rows. Hence, -1 times this negative co-factor gives a positive determinant of the third order.

Continuing this process, the result obtained is 4.

2. Show that $\begin{vmatrix} 1 & 4 & 7 \\ 2 & 5 & 8 \\ 3 & 6 & 9 \end{vmatrix}$ is a vanishing determinant.

Solution

Prin. 8 and 5, $\begin{vmatrix} 1 & 4 & 7 \\ 2 & 5 & 8 \\ 3 & 6 & 9 \end{vmatrix} = \begin{vmatrix} 1 & 3 & 6 \\ 2 & 3 & 6 \\ 3 & 3 & 6 \end{vmatrix} = 0.$
*

3. Evaluate the determinant $\begin{vmatrix} 1 & 2 & 3 & 4 & 5 \\ 2 & 4 & 5 & 7 & 9 \\ 3 & 5 & 9 & 11 & 13 \\ 2 & 4 & 5 & 3 & 2 \\ 1 & 2 & 3 & 5 & 6 \end{vmatrix}$.

SOLUTION

$$\begin{vmatrix} 1 & 2 & 3 & 4 & 5 \\ 2 & 4 & 5 & 7 & 9 \\ 3 & 5 & 9 & 11 & 13 \\ 2 & 4 & 5 & 3 & 2 \\ 1 & 2 & 3 & 5 & 6 \end{vmatrix} = \begin{vmatrix} 1 & 0 & 0 & 0 & 0 \\ 2 & 0 & \bar{1} & \bar{1} & \bar{1} \\ 3 & \bar{1} & 0 & \bar{1} & \bar{2} \\ 2 & 0 & \bar{1} & \bar{5} & \bar{8} \\ 1 & 0 & 0 & 1 & 1 \end{vmatrix} = \begin{vmatrix} 0 & \bar{1} & \bar{1} & \bar{1} \\ \bar{1} & 0 & \bar{1} & \bar{2} \\ 0 & \bar{1} & \bar{5} & \bar{8} \\ 0 & 0 & 1 & 1 \end{vmatrix} = \begin{vmatrix} \bar{1} & \bar{1} & \bar{1} \\ \bar{1} & \bar{5} & \bar{8} \\ 0 & 1 & 1 \end{vmatrix}$$

$$= \begin{vmatrix} \bar{1} & 0 & 0 \\ \bar{1} & \bar{4} & \bar{7} \\ 0 & 1 & 1 \end{vmatrix} = -\begin{vmatrix} \bar{4} & \bar{7} \\ 1 & 1 \end{vmatrix} = -3.$$

Evaluate the following:

4. $\begin{vmatrix} 8 & 4 & 6 \\ 2 & \bar{2} & 4 \\ 2 & 3 & 4 \end{vmatrix}$.

5. $\begin{vmatrix} 4 & 2 & 1 & 2 \\ 2 & 3 & 2 & 5 \\ 3 & 2 & 1 & 2 \\ 5 & 6 & 4 & 9 \end{vmatrix}$.

6. $\begin{vmatrix} 5 & 2 & 7 & 5 \\ 6 & 3 & 1 & 4 \\ 4 & 2 & 1 & 3 \\ 6 & 3 & 2 & 5 \end{vmatrix}$.

7. $\begin{vmatrix} 4 & \bar{1} & 2 & 1 \\ 5 & \bar{2} & 3 & 1 \\ 2 & 1 & 1 & 2 \\ 3 & 2 & 4 & 6 \end{vmatrix}$.

8. $\begin{vmatrix} 2 & 4 & 4 & 6 & 1 \\ 2 & 5 & 3 & 1 & 2 \\ 3 & 1 & 1 & 2 & 1 \\ 2 & 1 & 1 & 1 & 2 \\ 5 & 2 & 2 & 3 & 1 \end{vmatrix}$.

9. $\begin{vmatrix} 2 & 1 & 2 & 3 & 3 \\ 1 & 2 & 2 & 2 & 4 \\ 3 & 2 & 1 & 3 & 2 \\ 2 & 3 & 4 & 0 & 2 \\ 3 & 3 & 2 & 3 & 0 \end{vmatrix}$.

10. $\begin{vmatrix} a & 1 & 1 & 1 \\ 1 & a & 1 & 1 \\ 1 & 1 & a & 1 \\ 1 & 1 & 1 & a \end{vmatrix}$.

562. To factor a determinant.

EXAMPLES

1. Factor $D = \begin{vmatrix} x & b & b \\ x & a & c \\ -y & a & c \end{vmatrix}$.

SOLUTION. — If $a = c$, the second and third columns are identical and Prin. 5, the determinant vanishes. Hence, by the Factor Theorem, § 136, $a - c$ is a factor of D.

Again, if $x = -y$, the second and third rows are identical and $D = 0$. Hence, $x + y$ is a factor of D.

Since every constituent of D is of the third degree and $(a - c)(x + y)$ is of the second degree, D must have another factor of the first degree. Substituting 0 for b, D is equal to x times the co-factor $\begin{vmatrix} a & c \\ a & c \end{vmatrix}$, which is equal to 0; that is, $D = 0$. Hence, the other factor of D is $b - 0$, or b; or it may be $-b$.

It remains to find whether $D = b(a - c)(x + y)$ or $-b(a - c)(x + y)$. The secondary diagonal of D is $+aby$ and this is the only constituent of D involving a, b, and y. Since the sign of aby is $+$ in $b(a - c)(x + y)$ but $-$ in $-b(a - c)(x + y)$, $D = b(a - c)(x + y)$.

Factor the following determinants by inspection:

2. $\begin{vmatrix} x & 1 & b \\ y & 1 & a \\ x & 1 & a \end{vmatrix}$.

3. $\begin{vmatrix} a^2 & a & 1 \\ b^2 & b & 1 \\ c^2 & c & 1 \end{vmatrix}$.

4. $\begin{vmatrix} 2 & 2 & 5 \\ 2 & x & 5 \\ x & 3 & 5 \end{vmatrix}$.

563. Solution of simultaneous simple equations.

It has been shown that in a system of *two* simultaneous simple equations of the form $ax + by = c$, *either unknown number is equal to a fraction whose denominator is the determinant of the system and whose numerator is the determinant of the system with the known terms substituted for the corresponding coefficients of that unknown number.*

By trial, the principle is found to hold for the solution of three simultaneous simple equations.

Thus, given
$$\begin{cases} a_1x + b_1y + c_1z = k_1, \\ a_2x + b_2y + c_2z = k_2, \\ a_3x + b_3y + c_3z = k_3. \end{cases}$$

Solving by the ordinary process of elimination, then rearranging and grouping terms,

$$x = \frac{k_1(b_2c_3 - b_3c_2) - k_2(b_1c_3 - b_3c_1) + k_3(b_1c_2 - b_2c_1)}{a_1(b_2c_3 - b_3c_2) - a_2(b_1c_3 - b_3c_1) + a_3(b_1c_2 - b_2c_1)}$$

$$= \frac{\begin{vmatrix} k_1 & b_1 & c_1 \\ k_2 & b_2 & c_2 \\ k_3 & b_3 & c_3 \end{vmatrix}}{\begin{vmatrix} a_1 & b_1 & c_1 \\ a_2 & b_2 & c_2 \\ a_3 & b_3 & c_3 \end{vmatrix}}.$$

Similarly for the values of y and z.

The principle will now be proved to be general:

Let
$$\left\{\begin{array}{l} a_1x + b_1y + c_1z + \cdots = k_1, \\ a_2x + b_2y + c_2z + \cdots = k_2, \\ \cdots\cdots\cdots\cdots\cdots \\ a_nx + b_ny + c_nz + \cdots = k_n \end{array}\right. \tag{1}$$

be a system of n simple equations. Let D represent the determinant of the system, D_x the determinant of the system with the known terms $k_1, k_2, \cdots$ substituted for the corresponding coefficients of x, and $A_1, A_2, \cdots$ the co-factors of $a_1, a_2, \cdots$.

Then,
$$D = \begin{vmatrix} a_1 & b_1 & c_1 & \cdots \\ a_2 & b_2 & c_2 & \cdots \\ \cdots & \cdots & \cdots & \cdots \\ a_n & b_n & c_n & \cdots \end{vmatrix}, \text{ and } D_x = \begin{vmatrix} k_1 & b_1 & c_1 & \cdots \\ k_2 & b_2 & c_2 & \cdots \\ \cdots & \cdots & \cdots & \cdots \\ k_n & b_n & c_n & \cdots \end{vmatrix}. \tag{2}$$

Multiplying the first equation of the system by A_1, the second by A_2, etc., and adding the resulting equations,

$$\left.\begin{array}{l} (a_1A_1 + a_2A_2 + \cdots + a_nA_n)x \\ +(b_1A_1 + b_2A_2 + \cdots + b_nA_n)y \\ +\cdots\cdots\cdots\cdots\cdots \end{array}\right\} = k_1A_1 + k_2A_2 + \cdots + k_nA_n. \tag{3}$$

Since the coefficient of x in (3) is the sum of the products of the elements in one column of D and their co-factors, the coefficient of x is equal to D, and the second member of (3) is equal to D_x. The coefficient of y in (3) differs from that of x only in having the elements of the second column of D repeated in the first column, $b_1, b_2, \cdots$ replacing $a_1, a_2, \cdots$, thus:

$$\begin{vmatrix} b_1 & b_1 & c_1 & \cdots \\ b_2 & b_2 & c_2 & \cdots \\ \cdots & \cdots & \cdots & \cdots \\ b_n & b_n & c_n & \cdots \end{vmatrix}.$$

By Prin. 5, this determinant is equal to zero, and in like manner the coefficients of the other unknown numbers vanish. Hence, (3) becomes

$$\left.\begin{array}{l} Dx = D_x\text{; whence, } x = \dfrac{D_x}{D}. \\ \text{Similarly, } \quad Dy = D_y\text{; whence, } y = \dfrac{D_y}{D}. \end{array}\right\} \tag{4}$$

So for each unknown number.

Examples

Solve the following by determinants:

1. $\left\{\begin{array}{l} 2x + 5y = 9, \\ 3x + 2y = 8. \end{array}\right.$

2. $\left\{\begin{array}{l} 3x + 2y = 12, \\ 4x + 3y = 17. \end{array}\right.$

3. $\left\{\begin{array}{l} 2x + 7y = 30, \\ x + 4y = 17. \end{array}\right.$

4. $\left\{\begin{array}{l} 5x + y = 12, \\ 2x + 3y = 10. \end{array}\right.$

5. $\begin{cases} 4x-3y=8, \\ x+4y=21. \end{cases}$

6. $\begin{cases} 3x-2y=-2, \\ 2x-3y=-5. \end{cases}$

7. $\begin{cases} ax+by=c, \\ mx+ny=d. \end{cases}$

8. $\begin{cases} ax-by=r, \\ cx+dy=s. \end{cases}$

9. $\begin{cases} 2x+5y+2z=27, \\ 8x+6y+3z=46, \\ 3x+7y+5z=47. \end{cases}$

10. $\begin{cases} 9x+2y+z=25, \\ 5x+y+z=14, \\ 7x+3y+2z=25. \end{cases}$

11. $\begin{cases} (a+b)x-(a-b)y=4ab, \\ (a-b)x+(a+b)y=2a^2-2b^2. \end{cases}$

12. $\begin{cases} 3x+2y+3z=17, \\ 2x+y+2z=10, \\ 5x+5y+z=29. \end{cases}$

13. $\begin{cases} 2x+3y-4z=18, \\ x+y+z=12, \\ 5x-y-z=12. \end{cases}$

14. $\begin{cases} x+2y+z=0, \\ 2x+y+z=2a-b, \\ x-y-2z=3b. \end{cases}$

15. $\begin{cases} x+y=2a, \\ y+z=3a-b, \\ z+x=3a. \end{cases}$

16. $\begin{cases} u-x+2y-3z=-5, \\ 3u-x+y-2z=2, \\ 2u+x+y-z=9, \\ -5u+2x-7y+z=-12. \end{cases}$

17. $\begin{cases} 2u+3v-4x+y=0, \\ u-v+x-y=-2, \\ 7u+2v-3x+y=6, \\ 5u+8v-10x+3y=3. \end{cases}$

564. An equation in which every term is of the first degree in some unknown number is called a **Homogeneous Linear Equation.**

$ax=by$, or $ax-by=0$, is a homogeneous linear equation.

565. By § 563 the denominator of the value of each unknown number in

$$\begin{cases} a_1x+b_1y+c_1z+\cdots=0, \\ a_2x+b_2y+c_2z+\cdots=0, \\ \cdots\cdots\cdots\

is the determinant of the system, and the numerator is the same determinant with 0 substituted for each coefficient of the unknown number. Therefore, the numerator in each case will have one column composed entirely of zeros, and, Prin. 2, will be equal to 0.

$$\therefore\ x = \frac{0}{D},\ y = \frac{0}{D},\ z = \frac{0}{D},\ \text{etc.}$$

Hence, each unknown number is equal to zero, except when $D = 0$, in which case each is indeterminate and the system is indeterminate.

The case in which $D = 0$ is the case in which the equations in (1) are not independent. For if it is possible to form any equation in (1) by combining multiples of two or more of the other equations by addition or subtraction, it is possible to make two rows of D identical by the same process.

Hence, *if n homogeneous linear equations involving n unknown numbers are independent, the unknown numbers are separately equal to zero.*

566. A system of $n - 1$ independent linear equations involving n unknown numbers is indeterminate (§ 214, proof); but if the equations are *homogeneous*, the *ratio* of any two unknown numbers may be found.

Thus, let $$a_1x + b_1y + c_1z = 0, \tag{1}$$

and $$a_2x + b_2y + c_2z = 0 \tag{2}$$

be given, to find the ratios of x to y, x to z, and y to z.

From (1), $$a_1\frac{x}{z} + b_1\frac{y}{z} = -c_1. \tag{3}$$

From (2), $$a_2\frac{x}{z} + b_2\frac{y}{z} = -c_2. \tag{4}$$

Solving, $$\frac{x}{z} = \frac{\begin{vmatrix} -c_1 & b_1 \\ -c_2 & b_2 \end{vmatrix}}{\begin{vmatrix} a_1 & b_1 \\ a_2 & b_2 \end{vmatrix}} \text{ and } \frac{y}{z} = \frac{\begin{vmatrix} a_1 & -c_1 \\ a_2 & -c_2 \end{vmatrix}}{\begin{vmatrix} a_1 & b_1 \\ a_2 & b_2 \end{vmatrix}}, \tag{5}$$

also, from (5), $$\frac{x}{y} = \frac{x}{z} \div \frac{y}{z} = \frac{\begin{vmatrix} -c_1 & b_1 \\ -c_2 & b_2 \end{vmatrix}}{\begin{vmatrix} a_1 & -c_1 \\ a_2 & -c_2 \end{vmatrix}} = \frac{\begin{vmatrix} b_1 & c_1 \\ b_2 & c_2 \end{vmatrix}}{\begin{vmatrix} c_1 & a_1 \\ c_2 & a_2 \end{vmatrix}}.$$

CONVERGENCY OF SERIES

567. By division $\frac{1}{1-x} = 1 + x + x^2 + x^3 + \cdots,$ (1)

an infinite series the sum of whose first n terms is

$$1 + x + x^2 + x^3 + \cdots + x^{n-1} = \frac{1 - x^n}{1 - x}.$$

Therefore, the difference between the fraction from which the series arose and the sum of the first n terms of the series is

$$\frac{1}{1-x} - \frac{1-x^n}{1-x}, \text{ or } \frac{x^n}{1-x}.$$

As n increases without limit, this difference decreases numerically without limit if x is numerically less than 1, but increases numerically without limit if $x = 1$ or is numerically greater than 1.

Hence, if x is numerically less than 1, the sum of the first n terms of the series *approaches the value of the fraction as a limit*, but if $x = 1$ or is numerically greater than 1, the sum of the first n terms *diverges* farther and farther from the value of the fraction as n increases, and approaches no fixed value as a limit.

If $x = -1$, the series becomes

$$1 - 1 + 1 - 1 + \cdots,$$

the sum of whose first n terms *oscillates* between 1 and 0 according as n is odd or even, while the value of the fraction is $\frac{1}{2}$.

It is evident from the above discussion that the series

$$1 + x + x^2 + x^3 + \cdots$$

stands for no definite fixed number unless x is numerically less than 1, in which case the sum of the first n terms, as n is indefinitely increased, converges toward the fixed number $\frac{1}{1-x}$.

568. When the sum of the first n terms of an infinite series approaches a constant number as a limit, as n is indefinitely increased, the limit is called the sum of the series, and the series is called a **Convergent Series.**

As n increases without limit, the sum of the first n terms of the series $1 + \frac{1}{2} + \frac{1}{4} + \frac{1}{8} + \cdots$ approaches 2 as a limit. Hence, 2 is the sum of the series, and the series is convergent.

The series $1 + x + x^2 + x^3 + \cdots$ is convergent for *all* values of x numerically less than 1.

569. A series that is convergent without regard to the signs of its terms is called an **Absolutely Convergent Series.**

The series $1 - \frac{1}{2} + \frac{1}{4} - \frac{1}{8} + \cdots$, $1 + \frac{1}{2} + \frac{1}{4} + \frac{1}{8} + \cdots$, $-1 - \frac{1}{2} - \frac{1}{4} - \frac{1}{8} - \cdots$ are absolutely convergent; for even when the signs of all the terms are alike, the sum of the first n terms remains finite however great n becomes. But the series $1 - \frac{1}{2} + \frac{1}{3} - \frac{1}{4} + \cdots$, though convergent, is not absolutely convergent, since $1 + \frac{1}{2} + \frac{1}{3} + \frac{1}{4} + \cdots$ is not convergent, as will be shown later.

570. When the sum of the first n terms of an infinite series can be made numerically greater than any finite number by taking n sufficiently great, the series is called a **Divergent Series.**

The series $1 + x + x^2 + x^3 + \cdots$ is divergent if $x = 1$ or any number numerically greater than 1, as 2 or -2 or 3, etc.

571. When the sum of the first n terms of an infinite series oscillates between certain fixed values, as n is indefinitely increased, the series is called an **Oscillating Series.**

The series $1 + x + x^2 + x^3 + \cdots$ is oscillating if $x = -1$, for the sum of the first n terms oscillates between 1 and 0 according as n is odd or even.

The series $1 - 1 - 2 - 1 + 1 + 2 + 1 - 1 - 2 - 1 + 1 + 2 + \cdots$ is oscillating, for the sum of the first n terms, as n takes the values 1, 2, 3, $\cdots$, is one of six fixed values that recur in the order 1, 0, -2, -3, -2, 0.

572. Any infinite series may be represented by

$$u_1 + u_2 + u_3 + \cdots + u_n + \cdots,$$

in which u_1 denotes the first term, u_2 the second term, etc., and u_n the nth term, or *any* term. Since n may be given the successive values 1, 2, 3, $\cdots$, a series may be represented by its nth term.

The series $\frac{2}{1}+\frac{3}{2}+\frac{4}{3}+\frac{5}{4}+\cdots+\frac{n+1}{n}+\cdots$ is represented by $\frac{n+1}{n}$; the series $\frac{1}{1}-\frac{1}{2}+\frac{1}{3}-\frac{1}{4}+\cdots+(-1)^{n-1}\frac{1}{n}+\cdots$ is represented by $(-1)^{n-1}\frac{1}{n}$.

The sum of the first n terms of a series is represented by S_n.

If the series is convergent, its sum is represented by S, which is defined by the relation

$$\text{lim. } (S_n)_{n=\infty} = S.$$

If the series is convergent, the series beginning with the $(n+1)$th term is a convergent series and has a sum, represented by R_n, which is called the *Residue* and defined by the relation

$$S = S_n + R_n, \text{ or } R_n = S - S_n.$$

573. From the above discussion and definitions it is seen that the expression

$$u_1 + u_2 + u_3 + \cdots + u_n + \cdots$$

represents a definite number S only when the series is convergent.

Since a convergent series has a definite sum, it can be used in demonstrations, but divergent and oscillating series can be so used only under special restrictions. Hence, it is important to discover principles by which the convergency of infinite series may be tested.

ELEMENTARY PRINCIPLES

574. The ratio of the $(n+1)$th term of a series to the nth is called its **Ratio of Convergency**.

In a geometrical series the ratio of convergency is constant, but in general the ratio of convergency of a series is variable, increasing or decreasing with the number of terms.

In $1+\frac{1}{2}+\frac{1}{4}+\frac{1}{8}+\cdots+\frac{1}{2^{n-1}}+\frac{1}{2^n}+\cdots$, the ratio of convergency is the constant $\frac{1}{2}$. In $1+3+9+27+\cdots+3^{n-1}+3^n+\cdots$, the ratio of convergency is the constant 3.

In $1+3+5+7+\cdots+(2n-1)+(2n+1)+\cdots$, the ratio of convergency is the variable ratio $\frac{2n+1}{2n-1}$, which decreases as n increases.

575. The convergence or divergence of a series may often be discovered by examining its ratio of convergency, or by com-

paring the series with an auxiliary series whose nature as convergent or divergent is already known.

576. PRINCIPLE 1. — *The nature of a series as convergent, divergent, or oscillating, is not changed by prefixing or removing a finite number of terms.*

For the sum of a finite number of terms is a finite or *fixed* number. Hence, if the sum of the series is finite, or infinite, or oscillating, when this sum has been increased or diminished by a fixed number, it will still be finite, or infinite, or oscillating, as the case may be.

577. PRINCIPLE 2. — *A series of positive and negative numbers is convergent, if the series formed by making the terms all positive or all negative is convergent.*

For the effect of changing the signs of some of the terms of a convergent series of positive numbers or of negative numbers is to decrease the numerical value of the sum of the series.

578. PRINCIPLE 3. — *If each term of a given series, or each term after any finite number of terms, is numerically less than the corresponding term of an absolutely convergent series, the given series is absolutely convergent; if each term is numerically greater than the corresponding term of a divergent series of numbers having the same sign, the given series is divergent.*

Thus, since $1 + \frac{1}{2} + \frac{1}{4} + \frac{1}{8} + \cdots$ is an absolutely convergent series, $1 + \frac{1}{3} + \frac{1}{5} + \frac{1}{9} + \cdots$ is a convergent series. But though $1 - \frac{1}{2} + \frac{1}{3} - \frac{1}{4} + \cdots$ is a convergent series, it does not follow that $1 + \frac{2}{5} + \frac{2}{7} + \frac{2}{9} + \cdots$ is a convergent series, because the convergent series used as a standard of comparison is not absolutely convergent.

Again, since $1 + \frac{1}{2} + \frac{2}{4} + \frac{4}{8} + \frac{8}{16} + \cdots$ is a divergent series, $1 + \frac{1}{2} + (\frac{1}{3} + \frac{1}{4}) + (\frac{1}{5} + \frac{1}{6} + \frac{1}{7} + \frac{1}{8}) + (\frac{1}{9} + \cdots + \frac{1}{16}) + \cdots$ is a divergent series; that is, $1 + \frac{1}{2} + \frac{1}{3} + \frac{1}{4} + \frac{1}{5} + \frac{1}{6} + \frac{1}{7} + \frac{1}{8} + \cdots$ is a divergent series.

579. PRINCIPLE 4. — *If, for all values of n greater than a certain finite value, the ratio of convergency of a given series of positive numbers is less than the ratio of convergency of a convergent series of positive numbers, the given series is convergent; but if the ratio of convergency is greater than that of a divergent series of positive numbers, the given series is divergent.*

Thus, in $1 + 1 + \frac{1}{2} + \frac{1}{2 \cdot 3} + \frac{1}{2 \cdot 3 \cdot 4} + \cdots$ the ratio of convergency is a variable having the successive values $1, \frac{1}{2}, \frac{1}{3}, \frac{1}{4}, \cdots$. It is observed that the

ratio of convergency of the given series is smaller, after the third term, than that of the series $1 + \frac{1}{2} + \frac{1}{4} + \frac{1}{8} + \cdots$, which is known to be convergent. Hence, the given series is more rapidly convergent than the latter.

The series $1 + 2 \cdot 2 + 3 \cdot 2^2 + 4 \cdot 2^3 + \cdots$ is more rapidly divergent than the series $1 + 2 + 2^2 + 2^3 + \cdots$.

580. PRINCIPLE 5. — *If the ratio of the corresponding terms of two series is finite for all values of n, and if the terms of both series are positive, then both series are convergent or both are divergent.*

The above principle may be established as follows:

Let $u_1, u_2, u_3, \cdots, u_n, \cdots$, and $v_1, v_2, v_3, \cdots, v_n, \cdots$ be the corresponding terms of two series beginning with the first or after any finite number of terms. Let these terms be such positive numbers that the ratio $u_n : v_n$ is finite for all values of n.

Let $\frac{u_1}{v_1} = r_1$, $\frac{u_2}{v_2} = r_2$, $\frac{u_3}{v_3} = r_3$, $\cdots$, r_m being the greatest and r_p the least of all the ratios.

Then, $$u_1 + u_2 + u_3 + \cdots = r_1 v_1 + r_2 v_2 + r_3 v_3 + \cdots,$$

which is $< r_m(v_1 + v_2 + v_3 + \cdots)$, but $> r_p(v_1 + v_2 + v_3 + \cdots)$.

$\therefore \frac{u_1 + u_2 + u_3 + \cdots}{v_1 + v_2 + v_3 + \cdots}$ lies between r_m and r_p, and hence is equal to a finite number, as C.

$$\therefore u_1 + u_2 + u_3 + \cdots = C(v_1 + v_2 + v_3 + \cdots).$$

Hence, if the sum of the terms of one series is finite, the sum of the terms of the other is finite; and if the sum of the terms of one series can become infinite, the sum of the terms of the other can become infinite.

Hence, both series are convergent or both are divergent.

TESTS OF CONVERGENCY

581. FIRST TEST. — *An infinite geometrical series is absolutely convergent if its ratio is numerically less than* 1, *oscillating if its ratio is* -1, *divergent if its ratio is* 1 *or numerically greater than* 1.

The above test may be established as follows:

By § 370, the sum of the geometrical series $a, ar, ar^2, \cdots ar^{n-1}$ (1)

is $$S_n = \frac{a(1 - r^n)}{1 - r}. \quad (2)$$

1. Let r be numerically less than 1.

Then, since as n increases indefinitely, $r^n \doteq 0$, (2) becomes

$$\lim. S_n = S = \frac{a}{1 - r},$$

a finite value, since r is a constant finite ratio and either positive or negative.

Hence, in this case the series is absolutely convergent.

2. Let $r = -1.$

Then, (1) becomes $a, -a, a, -a, \cdots,$

the sum of the first n terms of which oscillates between a and 0.

Hence, in this case the series is oscillating.

3. Let r be equal to or numerically greater than 1.

Then, by taking n great enough, the second member of (2) may be made numerically greater than any assignable number.

Hence, in this case the series is divergent.

582. SECOND TEST. — *A series is absolutely convergent if, as n increases without limit, the limit of the ratio of convergency is numerically less than* 1, *but divergent if the limit of the ratio of convergency is greater than* 1.

When the ratio of convergency approaches 1 *as a limit, the test fails and other tests must be applied.*

The above test may be established as follows:

Let $\lim. \frac{u_{n+1}}{u_n} = l.$

1. When l is numerically less than 1.

Let r represent any fixed number numerically less than 1 but numerically greater than l. Also let m be any finite positive integer.

Then, numerical values only being regarded,

$$\frac{u_{m+1}}{u_m} < r, \frac{u_{m+2}}{u_{m+1}} < r, \frac{u_{m+3}}{u_{m+2}} < r, \frac{u_{m+4}}{u_{m+3}} < r, \cdots,$$

whence $u_{m+1} < u_m r,\ u_{m+2} < u_{m+1} r,\ u_{m+3} < u_{m+2} r,\ u_{m+4} < u_{m+3} r, \cdots,$

or $u_{m+1} < u_m r,\ u_{m+2} < u_m r^2,\ u_{m+3} < u_m r^3,\ u_{m+4} < u_m r^4, \cdots;$

that is, on and after a finite number of terms each term of the given series is numerically less than the corresponding term of an infinite geometrical series whose ratio r is numerically less than 1.

Hence, by the first test and Prin. 3, the series is absolutely convergent.

2. When l is numerically greater than 1.

Then, as in 1 it can be shown that

$$u_{m+1} > u_m r,\ u_{m+2} > u_m r^2,\ u_{m+3} > u_m r^3,\ u_{m+4} > u_m r^4, \cdots;$$

that is, on and after a finite number of terms each term of the given series is numerically greater than the corresponding term of an infinite geometrical series whose ratio r is numerically greater than 1.

Hence, by the first test and Prin. 3, the series is divergent.

The failure of the second test is illustrated as follows:

In each of the series $1 + \frac{1}{2} + \frac{1}{3} + \frac{1}{4} + \cdots + \frac{1}{n} + \frac{1}{n+1} + \cdots$ and $1 - \frac{1}{2} + \frac{1}{3} - \frac{1}{4} + \cdots + (-1)^{n-1}\frac{1}{n} + (-1)^n\frac{1}{n+1} + \cdots$, the ratio of convergency is numerically equal to $\frac{n}{n+1}$. Though this ratio is numerically less than 1 for *finite* values of n, it approaches 1 as a limit as n is increased without limit. Since the *limit* of the ratio of convergency is neither less nor greater than 1 numerically, the second test is not applicable. In fact the first series is divergent, as illustrated under Prin. 3, and the second is convergent, by the third test, which follows.

583. THIRD TEST. — *If the terms of a series are alternately positive and negative, and each term is numerically greater than the following term, the series is convergent, provided the limit of the nth term is zero.*

The above test may be established as follows:

Let $u_1 - u_2 + u_3 - u_4 + \cdots + (-1)^{n-1}u_n + \cdots - u_{2n} + u_{2n+1} - \cdots$ be the series, and let $u_1 > u_2 > u_3 > \cdots > u_n > 0$, so that $u_n \doteq 0$.

The sum of an even number of terms may be written

$$S_{2n} = (u_1 - u_2) + (u_3 - u_4) + \cdots + (u_{2n-1} - u_{2n}), \tag{1}$$

or

$$S_{2n} = u_1 - (u_2 - u_3) - (u_4 - u_5) - \cdots - (u_{2n-2} - u_{2n-1}) - u_{2n}. \tag{2}$$

Since $u_1 > u_2 > u_3 > \cdots$, each group in (1) and (2) is a positive number.

Therefore, by (2), $S_{2n} < u_1$; and, by (1), the sums S_2, S_4, S_6, $\cdots$, S_{2n} are positive and increase with n.

Hence, $\lim.\ (S_{2n})_{n\doteq\infty}$ lies between 0 and u_1.

The sum of an odd number of terms can be written

$$S_{2n+1} = S_{2n} + u_{2n+1}, \text{ a positive number,}$$

or

$$S_{2n+1} = u_1 - (u_2 - u_3) - (u_4 - u_5) - \cdots - (u_{2n} - u_{2n+1}),$$

which is less than u_1.

Hence, $\lim.\ (S_{2n+1})_{n\doteq\infty}$ also lies between 0 and u_1.

Since the limit of the nth term is zero,

$$\lim.\ (u_{2n+1})_{n\doteq\infty} = 0;$$

that is,

$$\lim.\ (S_{2n+1} - S_{2n})_{n\doteq\infty} = 0.$$

Hence, S_{2n} and S_{2n+1} approach a common limit and the series is convergent.

NOTE. — If the nth term approaches a constant, not zero, as a limit, say $\lim. u_n = a$, S_{2n+1} and S_{2n} approach limits that differ by a, and the series is oscillating. Thus, $\frac{2}{1} - \frac{3}{2} + \frac{4}{3} - \frac{5}{4} + \cdots + (-1)^{n-1}\frac{n+1}{n} + \cdots$ is an oscillating series, because $\lim.\ (S_{2n+1} - S_{2n})_{n\doteq\infty} = \lim.\ (u_{2n+1})_{n\doteq\infty} = 1$.

584. Effect of grouping or rearranging the terms of a convergent series.

The sum S of an *absolutely* convergent series is not changed by grouping or rearranging its terms in any manner, for by taking a sufficient number of groups of the derived series all the terms of S_n may be included, and the sum of m groups approaches S as S_n approaches S.

Thus, § 371, $1-\frac{1}{2}+\frac{1}{4}-\frac{1}{8}+\frac{1}{16}-\frac{1}{32}+\cdots=\frac{2}{3}$;

also, § 371, $(1-\frac{1}{2})+(\frac{1}{4}-\frac{1}{8})+(\frac{1}{16}-\frac{1}{32})+\cdots=\frac{2}{3}$;

also $(1+\frac{1}{4}-\frac{1}{2})+(\frac{1}{16}+\frac{1}{64}-\frac{1}{8})+(\frac{1}{256}+\frac{1}{1024}-\frac{1}{32})+\cdots$

$$=\left(\frac{5}{4}-\frac{1}{2}\right)+\left(\frac{5}{4^3}-\frac{1}{2^3}\right)+\left(\frac{5}{4^5}-\frac{1}{2^5}\right)+\cdots$$

$$=\frac{5}{4}\left(1+\frac{1}{4^2}+\frac{1}{4^4}+\cdots\right)-\frac{1}{2}\left(1+\frac{1}{2^2}+\frac{1}{2^4}+\cdots\right)$$

§ 371, $=\frac{5}{4}(\frac{16}{15})-\frac{1}{2}(\frac{4}{3})=\frac{2}{3}$.

But when a convergent series is not absolutely convergent, that is, when its convergence depends partly upon the signs of its terms, grouping or rearranging its terms may change the sum of the series or even cause the series to become divergent.

Such series are said to be *conditionally* convergent.

Thus, $1-\frac{1}{2}+\frac{1}{3}-\frac{1}{4}+\cdots+(-1)^{n-1}\frac{1}{n}+\cdots$

is a conditionally convergent series. Denote the sum by S.

Then, $S=1-\frac{1}{2}+\frac{1}{3}-\frac{1}{4}+\frac{1}{5}-\frac{1}{6}+\frac{1}{7}-\frac{1}{8}+\frac{1}{9}-\frac{1}{10}+\frac{1}{11}-\frac{1}{12}+\cdots$;

but $(1+\frac{1}{3}-\frac{1}{2})+(\frac{1}{5}+\frac{1}{7}-\frac{1}{4})+(\frac{1}{9}+\frac{1}{11}-\frac{1}{8})+\cdots$

$=(1-\frac{1}{2}+\frac{1}{3}-\frac{1}{4}+\frac{1}{5}-\frac{1}{6})$

$+(\frac{1}{7}-\frac{1}{8}+\frac{1}{9}-\frac{1}{10}+\frac{1}{11}-\frac{1}{12})+\cdots$

$=1-\frac{1}{2}+\frac{1}{3}-\frac{1}{4}+\frac{1}{5}-\frac{1}{6}+\frac{1}{7}-\frac{1}{8}+\frac{1}{9}-\frac{1}{10}+\frac{1}{11}-\frac{1}{12}+\cdots$

$+\frac{1}{2}-\frac{1}{4}+\frac{1}{6}-\frac{1}{8}+\frac{1}{10}-\frac{1}{12}+\cdots$

$=S+\frac{1}{2}S=\frac{3}{2}S$. That is, by this method of grouping the sum has been increased one half.

The sum of this series may be changed at will by suitably grouping and rearranging the terms.

By grouping similarly the terms of the conditionally convergent series $1-\sqrt{\frac{1}{2}}+\sqrt{\frac{1}{3}}-\sqrt{\frac{1}{4}}+\cdots$, the resulting series can be shown to be divergent.

585. The standard auxiliary series for determining the convergency of series is the geometrical series $1 + ar + ar^2 + ar^3 + \cdots$. The next in importance is the series $\frac{1}{1^p} + \frac{1}{2^p} + \frac{1}{3^p} + \frac{1}{4^p} + \cdots$.

The series $\frac{1}{1^p} + \frac{1}{2^p} + \frac{1}{3^p} + \frac{1}{4^p} + \cdots$ *is absolutely convergent when* p *is positive and greater than* 1; *otherwise it is divergent.*

The proof is as follows:

1. Let $p > 1$. Then, the first term is equal to 1; the sum of the next two terms $< \frac{1}{2^p} + \frac{1}{2^p}$, or $\frac{2}{2^p}$; of the next four terms $< \frac{1}{4^p} + \frac{1}{4^p} + \frac{1}{4^p} + \frac{1}{4^p}$, or $\frac{4}{4^p}$; of the next eight terms $< \frac{8}{8^p}$; etc. Hence, after the first term, the terms of the series, grouped as shown, are less than the corresponding terms of the geometrical series

$$1 + \frac{2}{2^p} + \frac{4}{4^p} + \frac{8}{8^p} + \cdots,$$

which is absolutely convergent by the first test.

Hence, by Prin. 3, the given series is absolutely convergent when $p > 1$.

2. Let $p = 1$. Then, the series may be written

$$1 + \tfrac{1}{2} + (\tfrac{1}{3} + \tfrac{1}{4}) + (\tfrac{1}{5} + \tfrac{1}{6} + \tfrac{1}{7} + \tfrac{1}{8}) + \cdots.$$

Since each of the grouped terms is greater than the corresponding term of the divergent series $1 + \frac{1}{2} + (\frac{1}{4} + \frac{1}{4}) + (\frac{1}{8} + \frac{1}{8} + \frac{1}{8} + \frac{1}{8}) + \cdots$, by Prin. 3 the given series is divergent when $p = 1$.

3. Let $p < 1$.

It is evident that the series is more rapidly divergent than when $p = 1$, especially if p is negative.

Examples

1. Find the first four terms and represent the sum of the series whose nth term is $(-1)^{n-1}\frac{1}{\lfloor n}$. Test the convergency of the series.

Solution

Substituting 1, 2, 3, 4, ⋯, and $n + 1$ successively for n in $(-1)^{n-1}\frac{1}{\lfloor n}$,

$$u_1 = (-1)^0\frac{1}{\lfloor 1} = 1;\ u_2 = (-1)^1\frac{1}{\lfloor 2} = -\frac{1}{\lfloor 2};\ u_3 = (-1)^2\frac{1}{\lfloor 3} = \frac{1}{\lfloor 3};$$

$$u_4 = (-1)^3\frac{1}{\lfloor 4} = -\frac{1}{\lfloor 4};\ u_{n+1} = (-1)^{n+1-1}\frac{1}{\lfloor n+1} = (-1)^n\frac{1}{\lfloor n+1}.$$

$$\therefore S = 1 - \frac{1}{\lfloor 2} + \frac{1}{\lfloor 3} - \frac{1}{\lfloor 4} + \cdots + (-1)^{n-1}\frac{1}{\lfloor n} + (-1)^n\frac{1}{\lfloor n+1} + \cdots.$$

Ratio of convergency $= \frac{u_{n+1}}{u_n} = \frac{(-1)^n}{\lfloor n+1} \times \frac{\lfloor n}{(-1)^{n-1}} = \frac{-1}{n+1} = -\frac{1}{n+1}$,

which is numerically less than 1 and approaches 0 as a limit as n increases without limit.

Hence, 2d test, the series is absolutely convergent.

2. Apply the third test to the series of example 1.

3. Test the convergency of the series of example 1 by comparison with a geometrical series.

SOLUTION

The given series may be written

$$1 - \frac{1}{2} + \frac{1}{2 \cdot 3} - \frac{1}{2 \cdot 3 \cdot 4} + \frac{1}{2 \cdot 3 \cdot 4 \cdot 5} - \frac{1}{2 \cdot 3 \cdot 4 \cdot 5 \cdot 6} + \cdots.$$

The infinite geometrical series whose ratio is $-\frac{1}{2}$ may be written

$$1 - \frac{1}{2} + \frac{1}{2 \cdot 2} - \frac{1}{2 \cdot 2 \cdot 2} + \frac{1}{2 \cdot 2 \cdot 2 \cdot 2} - \frac{1}{2 \cdot 2 \cdot 2 \cdot 2 \cdot 2} + \cdots.$$

Since each term of the given series after the second is numerically less than the corresponding term of an infinite decreasing geometrical series, and since, § 581, every infinite decreasing geometrical series is absolutely convergent, by Prin. 3, the given series is absolutely convergent.

4. Compare the series of example 1 with the auxiliary series

$$\frac{1}{1^p} + \frac{1}{2^p} + \frac{1}{3^p} + \frac{1}{4^p} + \frac{1}{5^p} + \frac{1}{6^p} + \cdots.$$

SOLUTION

Let $p = 2$. Then, the auxiliary series becomes

$$\frac{1}{1 \cdot 1} + \frac{1}{2 \cdot 2} + \frac{1}{3 \cdot 3} + \frac{1}{4 \cdot 4} + \frac{1}{5 \cdot 5} + \frac{1}{6 \cdot 6} + \cdots.$$

The series in Ex. 1 is $1 - \frac{1}{\lfloor 2} + \frac{1}{\lfloor 3} - \frac{1}{\lfloor 4} + \frac{1}{\lfloor 5} - \frac{1}{\lfloor 6} + \cdots$

$$= \frac{1}{1} - \frac{1}{1 \cdot 2} + \frac{1}{1 \cdot 2 \cdot 3} - \frac{1}{1 \cdot 2 \cdot 3 \cdot 4} + \frac{1}{1 \cdot 2 \cdot 3 \cdot 4 \cdot 5} - \frac{1}{1 \cdot 2 \cdot 3 \cdot 4 \cdot 5 \cdot 6} + \cdots,$$

each term of which after the third is numerically less than the corresponding term of the auxiliary series.

Since, § 585, the auxiliary series is absolutely convergent when $p = 2$, the given series is absolutely convergent.

5. Discuss the convergency of the series

$$1 + 3x + 5x^2 + 7x^3 + \cdots.$$

SOLUTION

$3x = u_2 = (2 \cdot 2 - 1)x^{2-1}$; $5x^2 = u_3 = (3 \cdot 2 - 1)x^{3-1}$; $7x^3 = u_4 = (4 \cdot 2 - 1)x^{4-1}$.

Similarly, $u_n = (n \cdot 2 - 1)x^{n-1} = (2n - 1)x^{n-1}$, and substituting $n + 1$ for n, $u_{n+1} = [2(n + 1) - 1]x^{(n+1)-1} = (2n + 1)x^n$.

$$\therefore \frac{u_{n+1}}{u_n} = \frac{(2n + 1)x^n}{(2n - 1)x^{n-1}} = \frac{2n + 1}{2n - 1}x = \left(1 + \frac{2}{2n - 1}\right)x.$$

$$\therefore \lim. \left[\frac{u_{n+1}}{u_n}\right]_{n=\infty} = \lim. \left[\left(1 + \frac{2}{2n - 1}\right)x\right]_{n=\infty} = (1 + 0)x = x.$$

Hence, 2d test, the series is absolutely convergent when x is numerically less than 1, divergent when x is numerically greater than 1, and the test fails when x is numerically equal to 1.

It is easy to see, however, that the series is divergent when $x = 1$, since $1 + 3 + 5 + 7 + \cdots$ is plainly divergent. Finally, when $x = -1$, the series becomes $1 - 3 + 5 - 7 + 9 - 11 + \cdots$. The sum of 2 terms is -2; of 3 terms, $+3$; of 4 terms, -4; of 5 terms, $+5$, of n terms, $(-1)^{n-1}n$. Since by taking n large enough, the sum of the first n terms can be made numerically greater than any assignable number, the series is divergent.

Hence, the series is absolutely convergent when x is numerically less than 1, but divergent in all other cases.

Write the first six terms of the series denoted by

6. $\dfrac{1}{n+1}$. **7.** $(-1)^{n-1}(2n-1)$. **8.** $\dfrac{1}{\lfloor n}$. **9.** $\dfrac{\lfloor n}{n^{n-1}}$.

Find the ratio of convergency of

10. $1 + 3 + 5 + 7 + \cdots$.

11. $1 - \frac{1}{4} + \frac{1}{9} - \frac{1}{16} + \cdots$.

12. $1 - \frac{3}{2} + \frac{5}{4} - \frac{7}{8} + \cdots$.

13. $1 - 2x + 3x^2 - 4x^3 + \cdots$.

Discuss the convergency of the following series:

14. $1^2 + 3^2 + 5^2 + 7^2 + \cdots$.

15. $1 + \frac{1}{3} + \frac{1}{5} + \frac{1}{7} + \cdots$.

16. $1 - \frac{1}{3} + \frac{1}{5} - \frac{1}{7} + \cdots$.

17. $1 + \frac{3}{2} + \frac{5}{4} + \frac{7}{8} + \cdots$.

18. $\frac{2}{2} + \frac{3}{4} + \frac{4}{8} + \frac{5}{16} + \cdots$.

19. $1 + \dfrac{2^2}{2} + \dfrac{3^2}{2^2} + \dfrac{4^2}{2^3} + \cdots$.

20. $\dfrac{1}{2^0 \cdot 3} + \dfrac{1}{2 \cdot 3^2} + \dfrac{1}{2^2 \cdot 3^3} + \cdots$.

21. $1 + \dfrac{2 \cdot 2}{3} + \dfrac{3 \cdot 2^2}{3^2} + \dfrac{4 \cdot 2^3}{3^3} + \cdots$.

22. $\dfrac{1}{\sqrt{1}+1} + \dfrac{1}{\sqrt{2}+1} + \dfrac{1}{\sqrt{3}+1} + \dfrac{1}{\sqrt{4}+1} + \cdots$.

23. $1-2x+3x^2-4x^3+5x^4-6x^5+\cdots$.

24. $1+2x+4x^2+6x^3+8x^4+10x^5+\cdots$.

25. $1+\frac{1}{2}x+\frac{1}{5}x^2+\frac{1}{10}x^3+\frac{1}{17}x^4+\frac{1}{26}x^5+\cdots$.

26. $1+x+\frac{x^2}{\lfloor 2}+\frac{x^3}{\lfloor 3}+\cdots$.

27. $1+\frac{1\cdot 2}{x}+\frac{2\cdot 3}{x^2}+\frac{3\cdot 4}{x^3}+\cdots$.

28. $\frac{x}{1\cdot 2}+\frac{x^2}{2\cdot 3}+\frac{x^3}{3\cdot 4}+\frac{x^4}{4\cdot 5}+\cdots$.

29. $a+(a+d)r+(a+2d)r^2+\cdots+[a+(n-1)d]r^{n-1}+\cdots$.

586. Convergency of the binomial series.

It has been proved in § 452 that when n is a positive integer the series

$$a^n+na^{n-1}x+\frac{n(n-1)}{1\cdot 2}a^{n-2}x^2+\frac{n(n-1)(n-2)}{1\cdot 2\cdot 3}a^{n-3}x^3+\cdots \quad (1)$$

terminates and is equal to $(a+x)^n$. It will be shown in a later chapter that if $(a+x)^n$ can be expanded into a series of ascending powers of x when n is negative or fractional, the series is infinite and has the form of (1). It is important, then, to inquire for what values of x, if any, this infinite series is convergent.

The $(r+1)$th and the rth terms, respectively, are

$$\frac{n(n-1)\cdots(n-r+2)(n-r+1)}{1\cdot 2\cdots(r-1)r}a^{n-r}x^r$$

and

$$\frac{n(n-1)\cdots(n-r+2)}{1\cdot 2\cdots(r-1)}a^{n-r+1}x^{r-1},$$

and, consequently, the ratio of convergency of the series is

$$\left(\frac{n-r+1}{r}\right)\frac{x}{a}, \text{ or } \left(\frac{n+1}{r}-1\right)\frac{x}{a},$$

in which n, x, and a are constants and r is a variable, expressing the variable number of terms, $1, 2, 3, \cdots, \infty$. Hence, as r increases without limit, $\frac{n+1}{r}$ approaches the limit zero, and

$$\lim.\left[\left(\frac{n+1}{r}-1\right)\frac{x}{a}\right]_{r=\infty}=(0-1)\frac{x}{a}=-\frac{x}{a}.$$

Now $-\frac{x}{a}$ is numerically greater or less than 1, according as x is numerically greater or less than a.

Hence, by the second test, *the binomial series developed from* $(a+x)^n$ *is absolutely convergent when* x *is numerically less than* a, *and divergent when* x *is numerically greater than* a.

The second test fails when x is numerically equal to a.

When $x=a$, (1) may be written

$$a^n\left[1+n+\frac{n(n-1)}{1\cdot 2}+\frac{n(n-1)(n-2)}{1\cdot 2\cdot 3}+\cdots\right]. \qquad (2)$$

When $x=-a$, (1) may be written

$$a^n\left[1-n+\frac{n(n-1)}{1\cdot 2}-\frac{n(n-1)(n-2)}{1\cdot 2\cdot 3}+\cdots\right]. \qquad (3)$$

The nature of the series in (2) and (3) depends upon the value of n. The full discussion of these cases is beyond the scope of this book.

In *Chrystal's Algebra*, Part II, page 131, it is shown that (2) is absolutely convergent when n is positive, conditionally convergent when n lies between 0 and -1, oscillating when $n=-1$, and divergent when $n<-1$; also that (3) is convergent when n is positive, and divergent when n is negative.

587. Sum and difference of two convergent series.

Let $$U_n = u_1 + u_2 + u_3 + \cdots + u_n$$

and $$V_n = v_1 + v_2 + v_3 + \cdots + v_n$$

be the sums of the first n terms of two convergent series whose sums are U and V, respectively. Then, §§ 568, 423, as $n \doteq \infty$,

$$U_n + V_n \doteq U + V.$$

Therefore,

$$(u_1+v_1)+(u_2+v_2)+(u_3+v_3)+\cdots+(u_n+v_n)+\cdots$$

is a convergent series whose sum is $U+V$.

Hence, *if the corresponding terms of two convergent series are added, the resulting series is convergent, and its sum is equal to the sum of the sums of the two given series.*

The same principle applies when one convergent series is to be *subtracted* from another, term by term, for this operation is equivalent to adding the convergent series formed by changing the signs of all the terms of the subtrahend.

UNDETERMINED COEFFICIENTS

588. Coefficients assumed in the demonstration of a principle or the solution of a problem, whose values, not known at the outset, are to be determined by subsequent processes, are called **Undetermined Coefficients.**

To expand $(x-1)(x+1)(x-2)$ without actual multiplication,

put $$(x-1)(x+1)(x-2) = x^3 + Ax^2 + Bx + C, \qquad (1)$$

and determine A, B, and C by means of the fact that (1) is an *identity* and must be true for all values of x.

By (1), when $x = 0$, $\quad 2 = C$;

when $x = 1$, $\quad 0 = 1 + A + B + C$;

when $x = -1$, $\quad 0 = -1 + A - B + C$; etc.

By solving these three conditional equations, the coefficients A, B, and C, *undetermined* in (1), are found to be $A = -2$, $B = -1$, $C = 2$.

$$\therefore (x-1)(x+1)(x-2) = x^3 - 2x^2 - x + 2.$$

589. Let $p_0 + p_1x + p_2x^2 + \cdots + p_{n-1}x^{n-1} + p_nx^n + \cdots$, $\qquad (1)$

called a *power series in* x, be convergent when $x = a$, and let it be required to find toward what limit the sum S tends when $x \doteq 0$.

The ratio of convergency of (1) when $x = a$ is $\dfrac{p_n}{p_{n-1}} \cdot a$.

Since (1) is convergent when $x = a$, the limit of the ratio of convergency as $n \doteq \infty$ cannot exceed 1 numerically, and consequently must be numerically less than 1 when $x < a$ numerically, say when $x = b$ (not zero).

Hence, § 582, $p_0 + p_1b + p_2b^2 + \cdots + p_{n-1}b^{n-1} + p_nb^n + \cdots \qquad (2)$

is *absolutely convergent*. Therefore, it is possible to find a fixed number, as q, that is numerically greater than any term of (2).

Take $q > p_1 b$, $q > p_2 b^2$, $q > p_3 b^3$, $\cdots$, $q > p_n b^n$, numerically.

Then, $p_1 < \frac{q}{b}$, $p_2 < \frac{q}{b^2}$, $p_3 < \frac{q}{b^3}$, $\cdots$, $p_n < \frac{q}{b^n}$, numerically.

Therefore, by (1),

$$p_1 x + p_2 x^2 + p_3 x^3 + \cdots < \frac{qx}{b} + \frac{qx^2}{b^2} + \frac{qx^3}{b^3} + \cdots, \text{ numerically,}$$

$$< \frac{qx}{b}\left(1 + \frac{x}{b} + \frac{x^2}{b^2} + \cdots\right), \text{ numerically.} \quad (3)$$

Since b is a value of x between a and 0, when $x \doteq 0$ the series in the second member of (3) is an infinite decreasing geometrical series.

$\therefore\ p_1 x + p_2 x^2 + p_3 x^3 + \cdots, = S - p_0, < \frac{qx}{b} \cdot \frac{b}{b-x}$, or $< \frac{qx}{b-x}$, numerically,

which approaches zero as a limit as $x \doteq 0$.

That is, as $x \doteq 0$, $S - p_0 \doteq 0$, or $S \doteq p_0$. Hence,

PRINCIPLE. — *If a power series in x is convergent for a value of x, not zero, it is absolutely convergent for any smaller value of x, and as $x \doteq 0$ the sum of the series approaches the first term as a limit.*

590. Let $A + Bx + Cx^2 + \cdots = A' + B'x + C'x^2 + \cdots$, (1)

for every value of x that makes both series convergent.

Then, *for such values of x*, as $n \doteq \infty$,

$$\text{lim. } (A + Bx + Cx^2 + \cdots) = \text{lim. } (A' + B'x + C'x^2 + \cdots).$$

Therefore, § 589,

$$\text{lim. } (A + Bx + Cx^2 + \cdots)_{x \doteq 0} = \text{lim. } (A' + B'x + C'x^2 + \cdots)_{x \doteq 0},$$

or $$A = A'. \quad (2)$$

$\therefore$ by (1), $$Bx + Cx^2 + \cdots = B'x + C'x^2 + \cdots,$$

or $$x(B + Cx + \cdots) = x(B' + C'x + \cdots). \quad (3)$$

Since $x \doteq 0$ but is not equal to zero, the members of (3) may be divided by x.

$$\therefore\ B + Cx + Dx^2 + \cdots = B' + C'x + D'x^2 + \cdots, \quad (4)$$

for all values of x that make the given series convergent.

From (4), by the reasoning applied to (1),

$$\text{lim. } (B + Cx + Dx^2 + \cdots)_{x \doteq 0} = \text{lim. } (B' + C'x + D'x^2 + \cdots)_{x \doteq 0};$$

that is, $B = B'$, whence $x(C + Dx + \cdots) = x(C' + D'x + \cdots)$.

Similarly, $C = C'$, $D = D'$, etc. Hence,

PRINCIPLE OF UNDETERMINED COEFFICIENTS. — *If two series arranged according to the ascending powers of x are equal for every value of x that makes both series convergent, the coefficients of the like powers of x are equal each to each.*

Since $\lim.(A + Bx + Cx^2 + \cdots)_{x=0} = A$ also when the series is *finite* (§ 423), the Principle of Undetermined Coefficients applies when one or both of the series are finite.

591. An algebraic expression is said to be *developed* when it is transformed into a series whose sum, if it is finite, or the limit of whose sum, if it is infinite, is equal to the given expression.

DEVELOPMENT OF FRACTIONS

EXAMPLES

592. 1. Develop the fraction $\dfrac{1+2x}{1+x+x^2}$.

SOLUTION

The first term of the development is evidently $1 \div 1$, or 1; and since the denominator is not exactly contained in the numerator, the development is an infinite series beginning with 1 and proceeding according to ascending powers of x.

To determine the coefficients of the various powers, assume

$$\frac{1+2x}{1+x+x^2} = 1 + Ax + Bx^2 + Cx^3 + Dx^4 + \cdots \tag{1}$$

true for all values of x that make the second member a convergent series.

Clearing of fractions and collecting terms,

$$\begin{array}{rl|l|l|l|l} 1+2x = 1 + A & x + B & x^2 + C & x^3 + D & x^4 + \cdots \\ + 1 & + A & + B & + C & + \cdots \\ & + 1 & + A & + B & + \cdots \end{array} \tag{2}$$

The first member may be regarded as the infinite series,

$$1 + 2x + 0x^2 + 0x^3 + \cdots,$$

which has a definite sum for all values of x, while the second member is an infinite series having a definite sum for such values of x as make the series assumed in (1) convergent.

Therefore, since (2) is true for all values of x that make the assumed series convergent, by the principle of undetermined coefficients the coefficients of like powers of x in (2) may be equated.

Hence,
$$A+1=2; \quad \therefore A=1;$$
$$B+A+1=0; \quad \therefore B=-2;$$
$$C+B+A=0; \quad \therefore C=1;$$
$$D+C+B=0; \quad \therefore D=1; \text{ etc.}$$
$$\therefore \frac{1+2x}{1+x+x^2}=1+x-2x^2+x^3+x^4-\cdots.$$

The fraction may be developed also by division.

2. Develop the fraction $\dfrac{2-x+2x^2}{x^2-2x^3}$.

SOLUTION

Since the first term of the quotient is evidently $\dfrac{2}{x^2}$, or $2x^{-2}$,

assume $$\frac{2-x+2x^2}{x^2-2x^3}=Ax^{-2}+Bx^{-1}+C+Dx+Ex^2+\cdots.$$

Clearing of fractions,
$$2-x+2x^2=A+\begin{array}{r|l} B & x+\begin{array}{r|l} C & x^2+\begin{array}{r|l} D & x^3+\begin{array}{r|l} E & x^4+\cdots \\ -2A & -2B \end{array} \\ -2C & -2D \end{array} \\ -2A & \end{array}$$

Equating the coefficients of like powers of x, § 590, and solving,
$$A=2;\ B=3;\ C=8;\ D=16;\ E=32;\ \text{etc.}$$
$$\therefore \frac{2-x+2x^2}{x^2-2x^3}=2x^{-2}+3x^{-1}+8+16x+32x^2+\cdots.$$

Develop to five terms:

3. $\dfrac{1+x}{1-x}$.

4. $\dfrac{1+3x}{1+x}$.

5. $\dfrac{1}{1-2x}$.

6. $\dfrac{3}{2-x}$.

7. $\dfrac{1}{1-ax}$.

8. $\dfrac{2+3x^2}{1-2x^2}$.

9. $\dfrac{4x-3x^2}{1+2x}$.

10. $\dfrac{1-x-2x^2}{1-2x-x^2}$.

11. $\dfrac{x-x^2}{1+2x-x^2}$.

12. $\dfrac{1-x}{1-x+x^2}$.

13. $\dfrac{1}{1-x-x^2}$.

14. $\dfrac{2+x-2x^2}{1-x+2x^2}$.

15. $\dfrac{x^2+x^3}{1-2x+x^2}$.

16. $\dfrac{1-2x}{x^2+x^3+x^4}$.

17. $\dfrac{2-5x}{2x-x^2}$.

18. $\dfrac{1+x+x^2}{x+x^3+x}$.

19. $\dfrac{1}{a-x}$.

20. $\dfrac{1}{a+x}$.

21. $\dfrac{a}{1-x}$.

22. $\dfrac{a}{b-x}$.

23. $\dfrac{c}{b-ax}$.

DEVELOPMENT OF SURDS

Examples

593. **1.** Develop the expression $\sqrt{a+x}$ by the use of undetermined coefficients.

Solution

Assume $\sqrt{a+x} = A + Bx + Cx^2 + Dx^3 + Ex^4 + \cdots.$

Squaring, $a + x = A^2 + 2ABx + B^2 \left| \begin{matrix} x^2 + 2AD \\ + 2AC \end{matrix} \right| \begin{matrix} x^3 + C^2 \\ + 2BC \end{matrix} \left| \begin{matrix} x^4 + \cdots. \\ + 2AE \\ + 2BD \end{matrix} \right|$

Equating the coefficients of like powers of x, § 590,

$$A^2 = a; \quad \therefore A = \sqrt{a}.$$

$$2AB = 1; \quad \therefore B = \frac{\sqrt{a}}{2a}.$$

$$B^2 + 2AC = 0; \quad \therefore C = -\frac{\sqrt{a}}{8a^2}.$$

$$2AD + 2BC = 0; \quad \therefore D = \frac{\sqrt{a}}{16a^3}.$$

$$C^2 + 2AE + 2BD = 0; \quad \therefore E = -\frac{5\sqrt{a}}{128a^4}.$$

$$\therefore \sqrt{a+x} = \sqrt{a}\left(1 + \frac{x}{2a} - \frac{x^2}{8a^2} + \frac{x^3}{16a^3} - \frac{5x^4}{128a^4} + \cdots\right).$$

The given surd may also be developed by the extraction of the root indicated or by the use of the binomial formula. But whatever the method of development, the series obtained is equal to the surd only for such values of x as make the series convergent.

Develop to five terms by undetermined coefficients:

2. $\sqrt{1-x}$.

3. $\sqrt{1+2x}$.

4. $\sqrt{1+4x}$.

5. $\sqrt{4+x}$.

6. $\sqrt{a-x}$.

7. $\sqrt{a^2-x^2}$.

8. $\sqrt{1+x}$.

9. $\sqrt{1+x+x^2}$.

10. $(1+4x+6x^2+4x^3+x^4)^{\frac{1}{2}}$.

11. $(1-3x+3x^2-x^3)^{\frac{1}{3}}$.

12. $(1+x)^{\frac{3}{2}}$.

13. $\sqrt{1+2x+3x^2+4x^3+\cdots}$.

PARTIAL FRACTIONS

594. To resolve a fraction into partial fractions is to separate it into simpler fractions whose sum is equal to the given fraction.

It is necessary to consider only proper fractions. For if the degree of the numerator is not lower than that of the denominator, the fraction may be reduced by division to the sum of an integer and a proper fraction.

If the denominator of a fraction is composite, the fraction may be resolved into an indefinite number of sets of partial fractions. But the number of sets is limited to one by requiring that each partial fraction shall be a proper fraction incapable of resolution into simpler fractions.

1. *To select the denominators of the partial fractions.*

Since the resolution of a fraction into partial fractions is the converse of the process of uniting fractions with different denominators into a single fraction having their lowest common denominator, it is evident that the denominators of the partial fractions must comprise all the various prime factors of the given denominator.

When the prime factors of the given denominator are all different, it is sufficient to assume each of them for the denominator of a partial fraction. But when any prime factor is repeated in the given denominator, say m times, there must be a partial fraction having the mth power of this factor for a denominator, for otherwise the L. C. M. of the denominators would not contain the mth power of the factor. There may or may not be denominators that are lower powers of the factor than the mth, but provision should be made for such denominators. If they do not occur among the partial fractions, this will be indicated by numerators that reduce to zero.

Two illustrations of the selection of denominators will be given.

Thus, $$\frac{5x^2-3x-24}{(x^2+1)(x+3)(x+4)}=\frac{N_1}{x^2+1}+\frac{N_2}{x+3}+\frac{N_3}{x+4}, \qquad (1)$$

and $$\frac{26x+18}{(x^2+1)(x+3)^3}=\frac{N_4}{x^2+1}+\frac{N_5}{x+3}+\frac{N_6}{(x+3)^2}+\frac{N_7}{(x+3)^3}. \qquad (2)$$

In (1) no numerator can be equal to zero because each denominator is needed to produce the L. C. D., $(x^2+1)(x+3)(x+4)$. But in (2) it is possible that N_5 or N_6 may be equal to zero, since the L. C. D. would not be changed by omitting the corresponding fractions.

2. *To assume expressions for the numerators of the partial fractions.*

It has been agreed that each numerator shall be of lower degree than the corresponding denominator, and that each partial fraction shall be of such a form that it cannot be resolved into simpler fractions.

Therefore, in (1) the numerators N_2 and N_3 must be numerals, and the numerator N_1 may be either a numeral or an expression of the first degree in x. Hence, the numerators of the partial fractions have the form

$$\frac{5x^2-3x-24}{(x^2+1)(x+3)(x+4)}=\frac{Ax+B}{x^2+1}+\frac{C}{x+3}+\frac{D}{x+4}. \qquad (3)$$

In fact, $\dfrac{5x^2-3x-24}{(x^2+1)(x+3)(x+4)}=\dfrac{x-2}{x^2+1}+\dfrac{3}{x+3}-\dfrac{4}{x+4}.$

In (2) the numerators N_6 and N_7 corresponding to powers of $(x+3)$, the prime factor in the denominator, must be of lower degree than this prime factor, for otherwise either numerator could be separated into two parts, one of them a multiple of $(x+3)$, which would allow the fraction to be further decomposed.

Hence, the numerators of the partial fractions have the form

$$\frac{26x+18}{(x^2+1)(x+3)^3}=\frac{Ax+B}{x^2+1}+\frac{C}{x+3}+\frac{D}{(x+3)^2}+\frac{E}{(x+3)^3}, \qquad (4)$$

in which, as special cases, either A or B, but not both, may be equal to zero, and either C or D or both, but not E, may be equal to zero.

In fact, $\dfrac{26x+18}{(x^2+1)(x+3)^3}=\dfrac{1}{x^2+1}-\dfrac{1}{(x+3)^2}-\dfrac{6}{(x+3)^3}.$

RULE. — *Take each prime factor of the given fraction for a denominator of a partial fraction, and when any prime factor occurs m times in the given denominator, use also its second, third, fourth, ···, mth powers as denominators.*

Assume for each numerator an expression with undetermined

coefficients of a degree one lower than the prime factor of the corresponding denominator.

Suppose that the denominator of the given fraction is of the nth degree in x. Then, by the above rule, there will be n undetermined coefficients; and if the assumed identity is cleared of fractions and the second member is then arranged according to powers of x, the second member will be of the $(n-1)$th degree and have n terms.

Hence, by § 590, the two equal series obtained by clearing of fractions will furnish n conditional equations from which the n undetermined coefficients may be found.

Examples

1. Resolve $\dfrac{3}{1-5x+6x^2}$ into its partial fractions.

Solution

Assume that $\dfrac{3}{1-5x+6x^2} = \dfrac{A}{1-3x} + \dfrac{B}{1-2x}$ is an identity.

Clearing of fractions, $3 = A - 2Ax + B - 3Bx.$

That is, $3 + 0x = A + B - (2A + 3B)x.$

$\therefore$ § 590, $A + B = 3$ and $2A + 3B = 0.$

Solving, $A = 9$ and $B = -6.$

Hence, $\dfrac{3}{1-5x+6x^2} = \dfrac{9}{1-3x} - \dfrac{6}{1-2x}.$

2. Resolve $\dfrac{5-6x}{1-4x+4x^2}$ into its partial fractions.

Solution

Assume that $\dfrac{5-6x}{1-4x+4x^2} = \dfrac{A}{1-2x} + \dfrac{B}{(1-2x)^2}$ is an identity

Reducing, $5 - 6x = A + B - 2Ax.$

$\therefore$ § 590, $A + B = 5$ and $-2A = -6.$

Solving, $A = 3$ and $B = 2.$

Hence, $\dfrac{5-6x}{1-4x+4x^2} = \dfrac{3}{1-2x} + \dfrac{2}{(1-2x)^2}.$

8. Resolve $\dfrac{7-11x+7x^2}{(1-x)^3(1+x+x^2)}$ into its partial fractions.

SOLUTION

It is evident that the fractions corresponding to the factor $(1-x)^3$ will be

$$\frac{A}{1-x},\quad \frac{B}{(1-x)^2},\quad \text{and}\quad \frac{C}{(1-x)^3}.$$

Since the factor $(1+x+x^2)$ is quadratic and has no rational simple factor, the numerator corresponding to the denominator $1+x+x^2$ may have two terms; therefore, assume that

$$\frac{7-11x+7x^2}{(1-x)^3(1+x+x^2)}=\frac{A}{1-x}+\frac{B}{(1-x)^2}+\frac{C}{(1-x)^3}+\frac{D+Ex}{1+x+x^2} \qquad (1)$$

is an identity.

Then, $7-11x+7x^2=A(1-x)^2(1+x+x^2)+B(1-x)(1+x+x^2)$

$$+C(1+x+x^2)+(D+Ex)(1-x)^3 \qquad (2)$$

is an identity; that is, is true for *all* values of x.

Since there are five coefficients, A, B, C, D, and E, to be determined, and since (2) is true for all values of x, by giving x in succession each of five different values, five independent equations involving the undetermined coefficients may be formed, and from these equations the coefficients may be determined.

Let $x=1$; then, $(1-x)$, $(1-x)^2$, and $(1-x)^3$ reduce to 0, and the identity (2) becomes

$$3=3C;\ \therefore C=1. \qquad (3)$$

Let $x=0$; then, $\qquad 7=A+B+C+D,$

or, since $C=1$, $\qquad A+B+D=6. \qquad (4)$

Let $x=-1$; then, $25=4A+2B+1+8D-8E,$

or, dividing by 2, $\qquad 2A+B+4D-4E=12. \qquad (5)$

Let $x=2$; then, $\qquad 13=7A-7B+7-D-2E,$

or $\qquad 7A-7B-D-2E=6. \qquad (6)$

Let $x=-2$; then, $57=27A+9B+3+27D-54E,$

or, dividing by 9, $\qquad 3A+B+3D-6E=6. \qquad (7)$

Solving the equations, (4), (5), (6), and (7), we have, together with (3),

$$A=2,\ B=0,\ C=1,\ D=4,\ E=2.$$

Hence, $\dfrac{7-11x+7x^2}{(1-x)^3(1+x+x^2)}=\dfrac{2}{1-x}+\dfrac{1}{(1-x)^3}+\dfrac{4+2x}{1+x+x^2}.$

4. Resolve $\dfrac{x+2x^2}{1-x^3}$ into its partial fractions.

SUGGESTION. — Assume $\dfrac{x+2x^2}{1-x^3} = \dfrac{A}{1-x} + \dfrac{B+Cx}{1+x+x^2}$.

5. Resolve $\dfrac{x^2+x-4}{x^2-1}$ into its partial fractions.

SUGGESTION. — When the numerator is not of lower degree than the denominator, the numerator should be divided by the denominator until the remainder is of lower degree than the denominator. The fractional part of the resulting mixed expression may then be resolved into partial fractions, and these may be annexed to the integral part.

Resolve each of the following into its partial fractions:

6. $\dfrac{2x}{8-6x+x^2}$.

7. $\dfrac{3+4x}{1+8x+16x^2}$.

8. $\dfrac{3x}{1+x^3}$.

9. $\dfrac{1-x-6x^2}{x-x^3}$.

10. $\dfrac{1-2x+2x^2}{(1-x)(1-2x)^2}$.

11. $\dfrac{3x-2}{(x-3)^2}$.

12. $\dfrac{x^2-6x}{(x-5)^3}$.

13. $\dfrac{x^2-5}{x^2-1}$.

14. $\dfrac{2x^2+9x+11}{x^2+4x+4}$.

15. $\dfrac{2-6x+6x^2}{1-6x+11x^2-6x^3}$.

16. $\dfrac{49}{(2-3x)^2(3-x)}$.

17. $\dfrac{1+2x+3x^2+2x^3}{x-x^5}$.

REVERSION OF SERIES

595. To revert a convergent series of ascending powers of x is to express the value of x by means of a series of ascending powers of the sum of the given series.

Let it be required to revert the series

$$y = ax + bx^2 + cx^3 + dx^4 + \cdots, \tag{1}$$

in which x has any value that will render the series convergent.

Assume $$x = Ay + By^2 + Cy^3 + Dy^4 + \cdots. \tag{2}$$

Substituting this value of x in (1), and dropping all terms involving a higher power of y than the fourth,

$$y = aAy + aB \mid y^2 + aC \mid y^3 + aD \mid y^4 + \cdots$$
$$+ bA^2 \mid + 2bAB \mid + bB^2 \mid$$
$$+ cA^3 \mid + 2bAC \mid$$
$$+ 3cA^2B \mid$$
$$+ dA^4 \mid$$

Since (1) is an identity, § 590,

$aA = 1$; $\quad \therefore\ A = \dfrac{1}{a}$.

$aB + bA^2 = 0$; $\quad \therefore\ B = -\dfrac{bA^2}{a} = -\dfrac{b}{a^3}$.

$aC + 2bAB + cA^3 = 0$; $\quad \therefore\ C = \dfrac{-2bAB - cA^3}{a} = \dfrac{2b^2 - ac}{a^5}$.

$aD + bB^2 + 2bAC + 3cA^2B + dA^4 = 0$;

$$\therefore\ D = -\frac{a^2d - 5abc + 5b^3}{a^7}.$$

Hence,

$$x = \frac{1}{a}y - \frac{b}{a^3}y^2 + \frac{2b^2 - ac}{a^5}y^3 - \frac{a^2d - 5abc + 5b^3}{a^7}y^4 + \cdots. \qquad (3)$$

Examples

1. Revert the series $y = x - \dfrac{x^2}{2} + \dfrac{x^3}{3} - \dfrac{x^4}{4} + \cdots$.

Solution. — Substituting in (3) 1 for a, $-\frac{1}{2}$ for b, $\frac{1}{3}$ for c, $-\frac{1}{4}$ for d, the values of the undetermined coefficients in (2) are found;

whence, $\quad x = y + \frac{1}{2}y^2 + \frac{1}{6}y^3 + \frac{1}{24}y^4 + \cdots$.

Revert the series in the following equations:

2. $y = x + x^2 + x^3 + x^4 + \cdots$.

3. $y = x - 3x^2 + 5x^3 - 7x^4 + \cdots$.

4. $y = x + 2x^2 + 3x^3 + 4x^4 + \cdots$.

5. $y = 2x + 3x^2 + 4x^3 + 5x^4 + \cdots$.

6. $y = x + \dfrac{x^2}{2} + \dfrac{x^3}{6} + \dfrac{x^4}{24} + \cdots$.

7. $y = x - 3x^2 + 5x^3$.

8. $y = x - 2x^2 + 2x^3 - 2x^4 + \cdots$.

9. Find the approximate value of x to four terms in the series

$$\frac{1}{2} = \frac{x}{2} + \frac{x^2}{12} + \frac{x^3}{30} + \frac{x^4}{56} + \cdots.$$

SOLUTION

Reverting, $x = 2(\frac{1}{2}) - \frac{2}{3}(\frac{1}{2})^2 - \frac{4}{45}(\frac{1}{2})^3 - \frac{10}{189}(\frac{1}{2})^4 - \cdots$

$= 1 - \frac{1}{6} - \frac{1}{90} - \frac{5}{1512} - \cdots$

$= .8189 +.$

Find the approximate value of x in the following:

10. $\frac{1}{2} = x + \frac{x^2}{6} + \frac{x^3}{24} + \frac{x^4}{60} + \cdots.$

11. $\frac{1}{5} = x - \frac{x^2}{3} + \frac{3x^3}{10} - \frac{2x^4}{7} + \cdots.$

BINOMIAL THEOREM — FRACTIONAL AND NEGATIVE EXPONENTS

596. It has been shown (§ 453, formula IV) that when n is a positive integer,

$$(1+x)^n = 1 + nx + \frac{n(n-1)}{1\cdot 2}x^2 + \frac{n(n-1)(n-2)}{1\cdot 2\cdot 3}x^3 + \cdots. \quad (1)$$

It is yet to be proved that this formula is true when n is a positive fraction, a negative integer, or a negative fraction.

I. *When n is a positive fraction.*

Let $n = \frac{p}{q}$, in which p and q are positive integers.

Then, § 246, $(1+x)^{\frac{p}{q}} = \sqrt[q]{(1+x)^p}$

§ 452, $= \sqrt[q]{1 + px + \cdots}.$ (2)

Assume, § 593, $\sqrt[q]{1 + px + \cdots} = A + Bx + Cx^2 + \cdots$ (3)

where x may have any value that will make both series *convergent*

Raising both members to the qth power,

$$1 + px + \cdots = [A + (Bx + Cx^2 + \cdots)]^q$$

$$= A^q + qA^{q-1}(Bx + Cx^2 + \cdots) + \cdots.$$

Equating the coefficients of like powers of x in two terms,

$$1 = A^q \text{ and } p = qA^{q-1}B;$$

whence, $$A = 1, \text{ and } B = \frac{p}{q}.$$

Substituting these values in (2) and (3),

$$(1 + x)^{\frac{p}{q}} = 1 + \frac{p}{q}x + \cdots.$$

That is, the formula is true for *two* terms, when n is a positive fraction.

II. *When n is negative, and either integral or fractional.*

§ 244, $$(1 + x)^{-n} = \frac{1}{(1 + x)^n}$$

§ 452 and Case I, $$= \frac{1}{1 + nx + \cdots}.$$

Dividing the numerator by the denominator,

$$(1 + x)^{-n} = 1 - nx + \cdots.$$

That is, the formula is true for *two* terms when n is negative and either integral or fractional.

Therefore, the formula is true for *two* terms, whether the exponent is positive or negative, integral or fractional, and the coefficient of the second term is n.

597. To find the coefficients of terms after the second, assume

$$(1 + x)^n = 1 + nx + Ax^2 + Bx^3 + Cx^4 + \cdots. \quad (1)$$

Since only two terms of the expansion of the first member are *known*, the coefficients A, B, etc., cannot be determined from (1) in its present form.

To find the value of the undetermined coefficients A, B, etc., we involve them in an identical equation, so that the coefficients of like powers of the same variable may be equated (§ 590).

Since in (1) x represents any number, put $1 + (x + z)$ for $1 + x$.

Then, $(1+x+z)^n=[1+(x+z)]^n$

by (1), $=1+n(x+z)+A(x+z)^2+B(x+z)^3+\cdots$

$=1+nx+Ax^2+Bx^3+\cdots$

$+(n+2Ax+3Bx^2+\cdots)z+\cdots.$ (2)

Since in (1) x represents any number, and since $1+(x+z)$ $=(1+x)+z=(1+x)\left(1+\frac{z}{1+x}\right)$, put $1+\frac{z}{1+x}$ for $1+x$.

Then,

$$(1+x+z)^n=(1+x)^n\left(1+\frac{z}{1+x}\right)^n$$

by (1), $=(1+x)^n\left(1+n\frac{z}{1+x}+A\frac{z^2}{(1+x)^2}+B\frac{z^3}{(1+x)^3}+\cdots\right)$

$=(1+x)^n+n(1+x)^{n-1}z$

$+A(1+x)^{n-2}z^2+B(1+x)^{n-3}z^3+\cdots.$ (3)

Therefore, from (3) and (2), Ax. 1,

$$(1+x)^n+n(1+x)^{n-1}z+A(1+x)^{n-2}z^2+B(1+x)^{n-3}z^3+\cdots$$
$$=1+nx+Ax^2+Bx^3+\cdots+(n+2Ax+3Bx^2+\cdots)z+\cdots$$

when both members are convergent.

Equating the coefficients of z,

§ 590, $n(1+x)^{n-1}=n+2Ax+3Bx^2+\cdots.$

Multiplying each member by $1+x$,

$$n(1+x)^n=n+(2A+n)x+(3B+2A)x^2+\cdots.$$

(1) $\times n$, $n(1+x)^n=n+n^2x+nAx^2+\cdots.$

Equating coefficients, $2A+n=n^2$,

and $3B+2A=nA$;

whence, $A=\frac{n(n-1)}{1\cdot 2}$,

and $B=\frac{n(n-1)(n-2)}{1\cdot 2\cdot 3}$.

In like manner any number of successive coefficients may be found. Substituting these values in (1),

$$(1+x)^n = 1 + nx + \frac{n(n-1)}{1\cdot 2}x^2 + \frac{n(n-1)(n-2)}{1\cdot 2\cdot 3}x^3 + \cdots. \quad (4)$$

The expansion of $(1+x)^n$ is not the expansion for the most general form of a binomial, since the first term is 1; but putting $\frac{x}{a}$ for x,

$$\left(1+\frac{x}{a}\right)^n = 1 + n\frac{x}{a} + \frac{n(n-1)}{1\cdot 2}\frac{x^2}{a^2} + \frac{n(n-1)(n-2)}{1\cdot 2\cdot 3}\frac{x^3}{a^3} + \cdots, \quad (5)$$

or $$\left(\frac{a+x}{a}\right)^n = \frac{1}{a^n}\left(a^n + na^{n-1}x + \frac{n(n-1)}{1\cdot 2}a^{n-2}x^2 + \cdots\right).$$

Multiplying by a^n,

$$(a+x)^n = a^n + na^{n-1}x + \frac{n(n-1)}{1\cdot 2}a^{n-2}x^2 + \cdots. \quad (6)$$

The binomial formula has thus been proved true when n is any positive integer, any positive fraction, any negative integer, or any negative fraction, that is, when n is any *commensurable* exponent, provided the second member of the formula is convergent when it is an infinite series.

598. It has been shown (§ 457) that the series developed from $(a+x)^n$ is infinite for fractional or negative values of n, and (§ 586) convergent when x is numerically less than a. Hence, in this case the true value of $(a+x)^n$ may be found to any required degree of accuracy. The series is divergent when x is numerically greater than a, but in this case the true value of $(a+x)^n$ may be found to any required degree of accuracy by expanding $(x+a)^n$, for the latter expansion then gives a convergent series.

Thus, $\sqrt{101}$ is not found from $(1+100)^{\frac{1}{2}} = 1 + 50 - 1250 + \cdots$, but from $(100+1)^{\frac{1}{2}} = 10 + \frac{1}{20} - \frac{1}{8000} + \cdots$, which approaches $\sqrt{101}$ as a limit.

When $x = -a$, $(a+x)^n = 0^n = 0$; when $x = a$, $(a+x)^n = (2a)^n$, the value of which may be found by separating $2a$ into a binomial whose first term is numerically greater than the second and expanding by the binomial formula. Thus, $(5+5)^{\frac{1}{2}} = 10^{\frac{1}{2}} = (9+1)^{\frac{1}{2}}$.

Exercises for practice will be found on page 414.

EXPONENTIAL AND LOGARITHMIC SERIES

599. In a previous chapter the student learned the use and advantage of common logarithms. But the principles upon which the computation of the tables was based had not then been established. Now, however, by the application of the principles of convergence of series, he will be able, by means of two infinite series, called the exponential and logarithmic series, respectively, to derive a formula for *computing* logarithms in any system.

600. The exponential series.

The exponential series is the development in ascending powers of x of the xth power of a certain constant base. The series is derived as follows:

By the binomial formula, if nx is commensurable and n is numerically greater than 1,

$$\left(1+\frac{1}{n}\right)^{nx}=1+\frac{nx}{n}+\frac{nx(nx-1)}{n^2\underline{|2}}+\frac{nx(nx-1)(nx-2)}{n^3\underline{|3}}+\cdots. \quad (1)$$

When $x=1$, (1) becomes

$$\left(1+\frac{1}{n}\right)^{n}=1+1+\frac{n(n-1)}{n^2\underline{|2}}+\frac{n(n-1)(n-2)}{n^3\underline{|3}}+\cdots. \quad (2)$$

By (2) and (1), since $\left[\left(1+\frac{1}{n}\right)^{n}\right]^{x}=\left(1+\frac{1}{n}\right)^{nx}$,

$$\left[1+1+\frac{n(n-1)}{n^2\underline{|2}}+\frac{n(n-1)(n-2)}{n^3\underline{|3}}+\cdots\right]^{x}$$

$$=1+x+\frac{nx(nx-1)}{n^2\underline{|2}}+\frac{nx(nx-1)(nx-2)}{n^3\underline{|3}}+\cdots. \quad (3)$$

In (3) it is permissible to let x have any finite value while n increases numerically without limit. For whatever the value of

x, the law of variation of n as $n \doteq \pm\infty$ may be so taken that nx is always commensurable. Accordingly, let $n \doteq \pm\infty$.

Then, in (3), $\lim.\left[\dfrac{n(n-1)}{n^2}\right]$, or $\lim.\left(1-\dfrac{1}{n}\right)=1$;

$\lim.\left[\dfrac{n(n-1)(n-2)}{n^3}\right]$, or $\lim.\left(1-\dfrac{3n-2}{n^2}\right)=1$;

$\lim.\left[\dfrac{nx(nx-1)}{n^2}\right]$, or $\lim.\left(x^2-\dfrac{x}{n}\right)=x^2$;

and so on. Hence, for all *finite* values of x, (3) becomes

$$\left(1+1+\frac{1}{\lfloor 2}+\frac{1}{\lfloor 3}+\cdots\right)^x=1+x+\frac{x^2}{\lfloor 2}+\frac{x^3}{\lfloor 3}+\cdots, \tag{4}$$

usually written

$$e^x=1+x+\frac{x^2}{\lfloor 2}+\frac{x^3}{\lfloor 3}+\cdots. \tag{5}$$

In (5) the base e is a *constant*, $1+1+\dfrac{1}{\lfloor 2}+\dfrac{1}{\lfloor 3}+\cdots$, whose value, as shown later, is 2.7182818 approximately; and the exponent x is a *variable*, and so may have any finite value.

Since in e^x the variable is an exponent, e^x is called the **exponential function of x**, and the series developed from e^x is called the **exponential series.**

601. To derive a formula applicable to *any* positive constant base a, let $\log_e a = k$.

Then, $a = e^k$,

and $a^x = e^{kx} = e^{(\log_e a)x}$.

$\therefore$ by (5), $a^x = 1 + (\log_e a)x + \dfrac{(\log_e a)^2x^2}{\lfloor 2} + \dfrac{(\log_e a)^3x^3}{\lfloor 3} + \cdots$ (6)

for all finite values of x. This is the **Exponential Formula,** or the exponential series when the exponent of e is $(\log_e a)x$.

602. In the exponential series (5) the ratio of convergency is

$$\frac{u_{r+1}}{u_r}=\frac{x^r}{\lfloor r}\div\frac{x^{r-1}}{\lfloor r-1}=\frac{x}{r},$$

in which the exponent x is *finite.*

Therefore, as r increases without limit, the ratio of convergency approaches zero as a limit. Hence, § 582, *the exponential series is absolutely convergent for all finite values of the variable involved.*

603. The constant e is used as the base of a system of logarithms called the *Napierian System,** or the *natural system.* Its approximate value is computed from the series $1+1+\frac{1}{\lfloor 2}+\frac{1}{\lfloor 3}+\cdots$ as follows:

$$
\begin{aligned}
1+1 &= 2.000000000\\
1\div\lfloor 2 &= .500000000\\
1\div\lfloor 3 = (1\div\lfloor 2)\div 3 &= .166666667\\
1\div\lfloor 4 = (1\div\lfloor 3)\div 4 &= .041666667\\
1\div\lfloor 5 = (1\div\lfloor 4)\div 5 &= .008333333\\
1\div\lfloor 6 = (1\div\lfloor 5)\div 6 &= .001388889\\
1\div\lfloor 7 = (1\div\lfloor 6)\div 7 &= .000198413\\
1\div\lfloor 8 = (1\div\lfloor 7)\div 8 &= .000024802\\
1\div\lfloor 9 = (1\div\lfloor 8)\div 9 &= .000002756\\
1\div\lfloor 10 = (1\div\lfloor 9)\div 10 &= .000000276\\
1\div\lfloor 11 = (1\div\lfloor 10)\div 11 &= .000000025\\
\text{Adding,}\qquad e &= 2.7182818 \quad \text{to 7 places.}
\end{aligned}
$$

Examples

From the exponential series deduce the following:

1. $\frac{1}{2}(e^x-e^{-x})=x+\frac{x^3}{\lfloor 3}+\frac{x^5}{\lfloor 5}+\frac{x^7}{\lfloor 7}+\cdots.$

2. $\frac{1}{2}(e+e^{-1})=1+\frac{1}{\lfloor 2}+\frac{1}{\lfloor 4}+\frac{1}{\lfloor 6}+\cdots.$

3. $\frac{1}{2}e=1+\frac{2}{\lfloor 3}+\frac{3}{\lfloor 5}+\frac{4}{\lfloor 7}+\cdots.$

4. $\frac{1}{e}=\frac{2}{\lfloor 3}+\frac{4}{\lfloor 5}+\frac{6}{\lfloor 7}+\frac{8}{\lfloor 9}+\cdots.$

5. $\frac{1}{2}(e^{ix}+e^{-ix})=1-\frac{x^2}{\lfloor 2}+\frac{x^4}{\lfloor 4}-\frac{x^6}{\lfloor 6}+\cdots.$

* Logarithms were invented by Baron Napier of Scotland in 1614.

604. The logarithmic series.

The logarithmic series is the expansion of $\log_e(1+x)$ in ascending powers of x. It is derived as follows:

By the exponential formula, when $1+x$ is the base and y the exponent,

$$(1+x)^y = 1 + [\log_e(1+x)]y + \frac{[\log_e(1+x)]^2y^2}{\lfloor 2} + \cdots. \quad (1)$$

By the binomial theorem,

$$(1+x)^y = 1 + yx + \frac{y(y-1)}{\lfloor 2}x^2 + \frac{y(y-1)(y-2)}{\lfloor 3}x^3 + \cdots. \quad (2)$$

Equating the second members of (1) and (2),

$$1 + [\log_e(1+x)]y + \frac{[\log_e(1+x)]^2y^2}{\lfloor 2} + \frac{[\log_e(1+x)]^3y^3}{\lfloor 3} + \cdots$$

$$= 1 + yx + \frac{y(y-1)}{\lfloor 2}x^2 + \frac{y(y-1)(y-2)}{\lfloor 3}x^3 + \cdots. \quad (3)$$

Equation (2) is true when x is numerically less than 1 (§ 586), and y is finite and commensurable (§ 597). Equation (1) also is true under these conditions, for the exponent y is finite, and when x is numerically less than 1, the base $1+x$ is positive.

Therefore, since the two series have the same sum $(1+x)^y$ and both are absolutely convergent for all finite commensurable values of y, x being numerically less than 1, equation (3) is an *identical equation*. Accordingly, equating the coefficients of y in the two series, § 590,

$$\log_e(1+x) = x + \frac{-1}{1\cdot 2}x^2 + \frac{(-1)(-2)}{1\cdot 2\cdot 3}x^3 + \frac{(-1)(-2)(-3)}{1\cdot 2\cdot 3\cdot 4}x^4 + \cdots.$$

Simplifying the second member,

$$\log_e(1+x) = x - \frac{x^2}{2} + \frac{x^3}{3} - \frac{x^4}{4} + \cdots. \quad (4)$$

This series is called the **Logarithmic Series**. It is absolutely convergent when x is numerically less than 1 (§ 582), and conditionally convergent when $x = 1$ (§§ 583, 584).

605. To compute a table of natural logarithms.

Since the logarithmic series

$$\log_e(1+x) = x - \frac{x^2}{2} + \frac{x^3}{3} - \frac{x^4}{4} + \cdots \tag{1}$$

is not convergent for values of x greater than 1, it cannot be used to find the natural logarithm of any number greater than 2.

Hence, it is necessary to modify (1) to make it available for computing the natural logarithm of any positive number, however great; and for ease in computation it is desirable that the series obtained be rapidly convergent.

Substituting $-x$ for x in (1),

$$\log_e(1-x) = -x - \frac{x^2}{2} - \frac{x^3}{3} - \frac{x^4}{4} - \cdots. \tag{2}$$

Subtracting (2) from (1), § 587,

$$\log_e(1+x) - \log_e(1-x) = 2\left(x + \frac{x^3}{3} + \frac{x^5}{5} + \cdots\right),$$

or, § 474,

$$\log_e \frac{1+x}{1-x} = 2\left(x + \frac{x^3}{3} + \frac{x^5}{5} + \cdots\right), \tag{3}$$

which is true when x is numerically less than 1 and when $x = 1$.

Let n be a positive number whose natural logarithm is known, and let m be a greater positive number whose natural logarithm is to be computed. Then, since

$$\frac{m-n}{m+n} \text{ is positive and less than } 1,$$

this value may be substituted for x in (3).

$$\text{If } x = \frac{m-n}{m+n}, \quad \frac{1+x}{1-x} = \frac{1 + \dfrac{m-n}{m+n}}{1 - \dfrac{m-n}{m+n}} = \frac{2m}{2n} = \frac{m}{n};$$

and in (3), since $\log_e \dfrac{1+x}{1-x} = \log_e \dfrac{m}{n} = \log_e m - \log_e n$,

$$\log_e m = \log_e n + 2\left[\frac{m-n}{m+n} + \frac{1}{3}\left(\frac{m-n}{m+n}\right)^3 + \frac{1}{5}\left(\frac{m-n}{m+n}\right)^5 + \cdots\right]. \tag{4}$$

This is the logarithmic formula for $m > n > 0$.

Since $\log_e 1 = 0$, by substituting 1 for n and 2 for m, $\log_e 2$ may be found; then by substituting 2 for n and 3 for m, $\log_e 3$ may be found; etc. Hence, a table of logarithms may be constructed by substituting for n in (4) the successive values 1, 2, 3, 4, $\cdots$ and for m values greater by 1 in each instance.

Substituting $n+1$ for m in (4) gives the more convenient formula,

$$\log_e(n+1) = \log_e n + 2\left[\frac{1}{2n+1} + \frac{1}{3(2n+1)^3} + \frac{1}{5(2n+1)^5} + \cdots\right], \quad (5)$$

which is true *for all positive values of n.*

Since the ratio of convergency of the series is always less than $\frac{1}{(2n+1)^2}$, the series is very rapidly convergent.

Thus, when $n = 1$, the series is more rapidly convergent than the geometrical series $\frac{1}{3} + \frac{1}{27} + \frac{1}{243} + \cdots$; when $n = 2$, the series is more rapidly convergent than the geometrical series $\frac{1}{5} + \frac{1}{125} + \frac{1}{3125} + \cdots$; etc.

Examples

1. Find the natural logarithm of 2 to the nearest sixth decimal place.

Solution. — Substituting 1 for n and 0 for $\log_e 1$ in the formula for $\log_e(n+1)$,

$$\log_e 2 = 0 + 2\left(\frac{1}{3} + \frac{1}{3 \cdot 3^3} + \frac{1}{5 \cdot 3^5} + \frac{1}{7 \cdot 3^7} + \cdots\right)$$

$$= \frac{2}{3} + \frac{2}{3 \cdot 3^3} + \frac{2}{5 \cdot 3^5} + \frac{2}{7 \cdot 3^7} + \cdots.$$

Since $\frac{2}{3^3} = \frac{2}{3} \div 9$, also $\frac{2}{3^5} = \frac{2}{3^3} \div 9$, also $\frac{2}{3^7} = \frac{2}{3^5} \div 9$, etc., and since these quotients are to be divided by 1, 3, 5, 7, $\cdots$, respectively, the computation may be arranged conveniently as follows:

3	2.00000000		
9	.66666667	$\div 1$	$= 0.66666667$
9	.07407407	$\div 3$	$= .02469136$
9	.00823045	$\div 5$	$= .00164609$
9	.00091449	$\div 7$	$= .00013064$
9	.00010161	$\div 9$	$= .00001129$
9	.00001129	$\div 11$	$= .00000103$
	.00000125	$\div 13$	$= .00000010$

Adding, $\log_e 2 = 0.69314718$

The error committed in omitting the rest of the series is

$$\frac{2}{15\cdot 3^{15}}+\frac{2}{17\cdot 3^{17}}+\frac{2}{19\cdot 3^{19}}+\cdots,$$

which is less than $\frac{2}{15\cdot 3^{15}}\left(1+\frac{1}{9}+\frac{1}{9^2}+\cdots\right)$, or $\frac{2}{15\cdot 3^{15}}\times\frac{1}{1-\frac{1}{9}}$,

or $$\frac{2}{15\cdot 3^{15}}\times\frac{9}{8}, \text{ or } \frac{2}{15\cdot 3^{13}\cdot 8},$$

which is much less than $\frac{2}{3\cdot 3^{13}}$, or .00000010, the last term found.

Hence, the part of the logarithm omitted does not affect the sixth decimal place, and $\log_e 2 = 0.693147$ to the nearest sixth decimal place.

Compute to the nearest sixth decimal place:

2. $\log_e 3$. 4. $\log_e 5$. 6. $\log_e 7$. 8. $\log_e 9$.

3. $\log_e 4$. 5. $\log_e 6$. 7. $\log_e 8$. 9. $\log_e 10$.

Suggestion. — The logarithm of a composite number is equal to the sum of the logarithms of its factors.

Prove the following:

10. $\log_e a - \log_e b = \frac{a-b}{a}+\frac{1}{2}\left(\frac{a-b}{a}\right)^2+\frac{1}{3}\left(\frac{a-b}{a}\right)^3+\cdots.$

11. $\log_e \sqrt{x^2-1} = \log_e x - \left(\frac{1}{2\,x^2}+\frac{1}{4\,x^4}+\frac{1}{6\,x^6}+\cdots\right)$, when $x>1$.

606. The base e arises naturally in the process of finding a formula for computing logarithms. In this and in other theoretical work, natural logarithms are used. But in numerical calculations, common or Briggs logarithms are the most convenient, because the base of the common system is the same as the base of our decimal system of notation.

Hence, the next problem is to discover how to change natural logarithms to common logarithms.

607. To find the logarithm of a number to any given base.

Let N be a number whose logarithm to the base a is sought.

By § 605, both $\log_e N$ and $\log_e a$ may be computed, and, therefore, are regarded as known numbers in this discussion.

Suppose that $\log_e N = l$, or $N = e^l$, (1)

and that $\log_e a = k$, or $a = e^k$. (2)

Further, let r be the multiplier, as yet unknown, by which $\log_e N$ is multiplied to produce $\log_a N$; that is, let

$$\log_a N = r \log_e N = rl. \tag{3}$$

By (3), $N = a^{rl}$,

and by (2), $N = (e^k)^{rl} = e^{krl}$. (4)

By (4) and (1), $e^{krl} = e^l$;

whence, $krl = l$, and $r = \frac{1}{k}$, a constant. (5)

The constant multiplier by which the logarithms in any system are derived from the corresponding natural logarithms is called the **Modulus** of the given system. The modulus of the natural system is 1.

To find the modulus of any given system, let a be the given base.

Since by (5), $r = \frac{1}{k}$, and by (2), $k = \log_e a$,

the modulus is $r = \frac{1}{\log_e a}$. Hence,

PRINCIPLE 1. — *The modulus of any system of logarithms is equal to the reciprocal of the natural logarithm of its base.*

608. Let M denote the modulus of the common system.

Since by actual calculation $\log_e 10 = 2.30258509\cdots$,

by Prin. 1, $$M = \frac{1}{\log_e 10} = \frac{1}{2.30258509\cdots} = .43429448\cdots.$$

Hence, by the definition of the modulus of a system,

PRINCIPLE 2. — *The common logarithm of a number is equal to its natural logarithm multiplied by* .43429448….

Therefore, by (4) and (5), § 605, when $m > n > 0$,

$$\log_{10} m = \log_{10} n + 2M\left[\frac{m-n}{m+n} + \frac{1}{3}\left(\frac{m-n}{m+n}\right)^3 + \frac{1}{5}\left(\frac{m-n}{m+n}\right)^5 + \cdots\right], \tag{1}$$

and $\log_{10}(n+1)$

$$= \log_{10} n + 2M\left[\frac{1}{2n+1} + \frac{1}{3(2n+1)^3} + \frac{1}{5(2n+1)^5} + \cdots\right], \tag{2}$$

in which $M = .43429448\cdots$.

Examples

1. Compute the common logarithm of 11 to six decimal places.

Solution. — By (2), the formula for the common logarithm of $n + 1$,

$$\log_{10} 11 = \log_{10} 10 + .86858896 \left(\frac{1}{21} + \frac{1}{3 \cdot 21^3} + \frac{1}{5 \cdot 21^5} + \cdots \right).$$

For convenience the computation is arranged as follows:

	$\log_{10} 10$	$= 1.00000000$
21	.86858896	
21	.04136138 $\div 1 =$	.04136138
21	.00196959	
	.00009379 $\div 3 =$	.00003126
Adding,	$\log_{10} 11 =$	1.04139264

In the above computation only the first two terms of the series are used. Since the third term is less than $\frac{1}{21^2}$ of the second term, or less than $\frac{1}{441}$ of .00003126, say less than .00000008, and the fourth term is less than $\frac{1}{441}$ of the third term, and so on, it is evident that the terms after the second cannot affect the sixth decimal place.

Hence, $\log_{10} 11 = 1.041393$, to the nearest sixth decimal place.

2. Compute the common logarithms of 2, 3, and 7, and verify the following table:

Number	Logarithm	Number	Logarithm	Number	Logarithm
1	0.000000	5	0.698970	9	0.954243
2	0.301030	6	0.778151	10	1.000000
3	0.477121	7	0.845098	11	1.041393
4	0.602060	8	0.903090	12	1.079181

3. Find the four-place common logarithms of the composite numbers from 14 to 25 inclusive.

4. Find the common logarithms of 225, 175, and .014 to four places of decimals.

5. By using the above table find the four-place common logarithms of .125, 46.2, 1.62, .0625, $\frac{1}{15}$, $9\frac{5}{8}$, 1.1, and $\frac{3}{196}$.

6. Show that $\log_{12} 18 = \dfrac{\log_e 2 + 2 \log_e 3}{2 \log_e 2 + \log_e 3}$.

7. Given $\log_e 2 = 0.69314718 \cdots$, to find $\log_2 7$ and $\log_2 8$.

SUMMATION OF SERIES

609. The summation of arithmetical and geometrical progressions and of infinite decreasing geometrical series has been discussed in an earlier chapter. Other series may be summed by somewhat similar devices, as will now be shown.

RECURRING SERIES

610. In any geometrical series, as $a + ax + ax^2 + \cdots$, each term after the first is equal to x times the preceding term. In the series $1 + 2x - x^2 + 8x^3 - 19x^4 + 62x^5 - \cdots$ each term after the third is equal to the algebraic sum of $-2x$ times the preceding term and $3x^2$ times the term preceding that. For example,

$8x^3 = -2x(-x^2) + 3x^2(2x)$; $\quad -19x^4 = -2x(8x^3) + 3x^2(-x^2)$; etc.

A series in which every term, after a certain term, is equal to the algebraic sum of the products formed by multiplying the r preceding terms, respectively, by r fixed multipliers is called a **Recurring Series of the rth order.**

A geometrical series is a recurring series of the first order, and is the simplest kind of a recurring series. The series $1 + 2x - x^2 + 8x^3 - 19x^4 + 62x^5 - \cdots$ is a recurring series of the second order.

611. If u_n represents any term, after the third, of the series

$$1 + 2x - x^2 + 8x^3 - 19x^4 + 62x^5 - \cdots,$$

then, $$u_n = -2x(u_{n-1}) + 3x^2(u_{n-2}).$$

Transposing, etc., $$1(u_n) + 2x(u_{n-1}) - 3x^2(u_{n-2}) = 0. \qquad (1)$$

Equation (1) states the relation existing between any three terms of the series, n being greater than 3; and the expression

$$1 + 2x - 3x^2,$$

formed by taking the coefficients of u_n, u_{n-1}, and u_{n-2} in this relation, is called the **Scale of Relation** of the series.

612. To find the scale of relation.

EXAMPLES

1. Find the scale of relation of the series

$$1 + x + 4x^2 + 10x^3 + 22x^4 + 46x^5 + \cdots.$$

SOLUTION. — Since the series is evidently not a recurring series of the first order, try it for a recurring series of the second order, and assume $1 + Ax + Bx^2$ as the scale of relation.

If this supposition is correct, each term, after a certain term, increased by Ax times the preceding term and Bx^2 times the term preceding that, must be equal to zero. Therefore, beginning with one of the following equations each succeeding equation must be satisfied by the same values of A and B.

$$\begin{aligned}
4x^2 + Ax(x) \quad + Bx^2(1) \quad &= 0, \text{ or } 4 + \quad A + \quad B = 0;\\
10x^3 + Ax(4x^2) \; + Bx^2(x) \quad &= 0, \text{ or } 10 + \; 4A + \quad B = 0;\\
22x^4 + Ax(10x^3) + Bx^2(4x^2) \; &= 0, \text{ or } 22 + 10A + \; 4B = 0;\\
46x^5 + Ax(22x^4) + Bx^2(10x^3) &= 0, \text{ or } 46 + 22A + 10B = 0.
\end{aligned}$$

No values of A and B will satisfy all of these equations, but $A = -3$ and $B = 2$ satisfy the last three, as may be discovered by solving any two of them and trying the values obtained in the other.

Hence, the scale of relation is $1 - 3x + 2x^2$.

2. Find the scale of relation of the series

$$x - 2x^2 + x^3 + 3x^4 - 3x^5 - 4x^6 + 7x^7 + \cdots.$$

SOLUTION. — Assuming that the series is a recurring series of the second order whose scale of relation is $1 + Ax + Bx^2$, it is found that no values of A and B make the equations that may be formed on this supposition consistent. Not even the last three equations thus obtained are consistent. Therefore, the series is next tried for a recurring series of the *third* order. Assuming $1 + Ax + Bx^2 + Cx^3$ for the scale of relation, we obtain, as in the preceding example,

$$\begin{aligned}
3 + \quad A - 2B + \quad C &= 0, \qquad -4 - 3A + 3B + C = 0,\\
-3 + 3A + \quad B - 2C &= 0, \qquad 7 - 4A - 3B + 3C = 0.
\end{aligned}$$

All of these, after the first, are satisfied by $A = 1$, $B = 2$, $C = 1$.

Hence, the scale of relation is $1 + x + 2x^2 + x^3$.

Find the scale of relation of

3. $1 + 2x + 2x^2 + 2x^3 + 2x^4 + \cdots.$

4. $1 + 2x + 3x^2 + 4x^3 + 5x^4 + 6x^5 + \cdots.$

5. $1 + 3x + 8x^2 + 13x^3 + 18x^4 + 23x^5 + \cdots.$

6. $1 + x - 2x^2 - 2x^3 + 7x^4 + 7x^5 - 20x^6 - \cdots.$

7. $1 + x + x^2 - x^3 - 5x^4 - 11x^5 - 15x^6 - 9x^7 + \cdots.$

613. To find the sum or generating function.

By dividing the numerator by the denominator, or by employing the method of undetermined coefficients (§ 592), certain fractions may be developed into series of ascending powers of x.

The present problem is, *given the series, to find the generating fraction, or generating function.*

Let it be required to find the sum or generating function of

$$1 + x + 4x^2 + 10x^3 + 22x^4 + 46x^5 + 94x^6 + \cdots.$$

Multiplying the series by the scale of relation, $1 - 3x + 2x^2$,

$$\begin{array}{l|l|l|l|l|l|l}
1 + & x + 4 & x^2 + 10 & x^3 + 22 & x^4 + 46 & x^5 + 94 & x^6 + \cdots \\
1 - 3 & x + 2 & x^2 & & & & \\
\hline
1 + 1 & x + 4 & x^2 + 10 & x^3 + 22 & x^4 + 46 & x^5 + 94 & x^6 + \cdots \\
\quad - 3 & \quad - 3 & \quad - 12 & \quad - 30 & \quad - 66 & \quad - 138 & \quad - \cdots \\
 & \quad\quad 2 & \quad + 2 & \quad + 8 & \quad + 20 & \quad + 44 & \quad + \cdots \\
\hline
1 - 2 & x + 3 & x^2 + 0 & x^3 + 0 & x^4 + 0 & x^5 + 0 & x^6 + \cdots
\end{array}$$

Since the series multiplied by the scale of relation gives $1 - 2x + 3x^2 + 0x^3 + 0x^4 + \cdots$, or $1 - 2x + 3x^2$, if $1 - 2x + 3x^2$ is divided by the scale of relation, the series will be obtained.

That is, $\dfrac{1 - 2x + 3x^2}{1 - 3x + 2x^2}$ is the generating function of the series.

The generating function is also the *sum* of the series, if the series is convergent.

Similarly, *any recurring series is summed by multiplying the series by its scale of relation and indicating that the result is to be divided by the scale of relation.*

Suppose, for example, that the scale of relation of $a_0 + a_1x + a_2x^2 + a_3x^3 + \cdots$ is $1 + px + qx^2$ and that every term after the second is formed by means of the relation

$$1(a_nx^n) + px(a_{n-1}x^{n-1}) + qx^2(a_{n-2}x^{n-2}) = 0, \text{ or } a_n + pa_{n-1} + qa_{n-2} = 0.$$

Multiplying the sum of the first n terms by $1 + px + qx^2$,

$$\begin{array}{l|l|l|l|l|l}
a_0 + & a_1 & x + & a_2 & x^2 + \cdots + & a_{n-1}\ x^{n-1} \\
1 + & p & x + & q & x^2 & \\
\hline
a_0 + & a_1 & x + & a_2 & x^2 + \cdots + & a_{n-1} & x^{n-1} \\
 & pa_0 & & + pa_1 & + \cdots + pa_{n-2} & & + pa_{n-1} & x^n \\
 & & & + qa_0 & + \cdots + qa_{n-3} & & + qa_{n-2} & + qa_{n-1}x^{n+1} \\
\hline
a_0 + (a_1 + pa_0) & x + & 0 & x^2 + \cdots + 0x^{n-1} & + (pa_{n-1} + qa_{n-2})x^n & + qa_{n-1}x^{n+1}
\end{array}$$

Hence, the sum of the first n terms is

$$S_n = \frac{a_0 + (a_1 + pa_0)x}{1 + px + qx^2} + \frac{(pa_{n-1} + qa_{n-2})x^n + qa_{n-1}x^{n+1}}{1 + px + qx^2}.$$

If the series is convergent, the second fraction in the above value of S_n approaches zero as a limit when n is increased without limit, and the true sum is

$$S = \frac{a_0 + (a_1 + pa_0)x}{1 + px + qx^2}.$$

Examples

Find the sum or generating function of

1. $1 + 2x + 2x^2 + 2x^3 + 2x^4 + \cdots$.
2. $1 + x + 2x^2 + 3x^3 + 5x^4 + \cdots$.
3. $x - 3x^2 + 7x^3 - 17x^4 + 41x^5 - \cdots$.
4. $1 + x + x^2 + 3x^3 + 7x^4 + 17x^5 + \cdots$.
5. $1 + x + 2x^2 + 4x^3 + 7x^4 + 13x^5 + 24x^6 + 44x^7 + \cdots$.
6. $2 - 3x + x^2 + 7x^3 - 12x^4 - x^5 + 32x^6 - 42x^7 - \cdots$.

614. To find the general term.

When the generating function may be separated into partial fractions with denominators of the first degree, the series may be separated into two or more geometrical series, and the general term of the given series may be expressed as the sum of the general terms of the component geometrical series.

Examples

1. Find the general term of $1 + 2x + 6x^2 + 22x^3 + 86x^4 + \cdots$.

Solution. — The generating function is found to be $\dfrac{1 - 3x}{1 - 5x + 4x^2}$.

Separating this into its partial fractions, § 594,

$$\frac{1 - 3x}{1 - 5x + 4x^2} = \frac{\frac{2}{3}}{1 - x} + \frac{\frac{1}{3}}{1 - 4x} = \frac{2}{3}\left(\frac{1}{1 - x}\right) + \frac{1}{3}\left(\frac{1}{1 - 4x}\right).$$

Since
$$\frac{1}{1 - x} = 1 + x + x^2 + \cdots + x^r + \cdots$$

and
$$\frac{1}{1 - 4x} = 1 + 4x + 16x^2 + \cdots + 4^r x^r + \cdots,$$

the $(r + 1)$th, or general, term of the given series is

$$\tfrac{2}{3}x^r + \tfrac{1}{3}(4^r x^r), \text{ or } \tfrac{1}{3}(2 + 4^r)x^r.$$

Find the general term and the twelfth term of

2. $1 - 2x + 7x^2 - 20x^3 + 61x^4 - \cdots$.

3. $1 + 3x + 7x^2 + 15x^3 + 31x^4 + \cdots$.

4. $1 + 5x + 19x^2 + 65x^3 + 211x^4 + \cdots$.

DIFFERENCE SERIES

615. If each term of a series is subtracted from the following term, the successive differences form another series called the *first order of differences;* if each term of the first order of differences is subtracted from the following term, a *second order of differences* is formed; and so on.

By continuing this process an order of equal differences may sometimes be obtained.

A series whose mth order of differences is a series of equal numbers is called a **Difference Series of the mth order**, m being finite.

Thus, in the series 1, 8, 27, 64, 125, 216, ···, the successive orders of differences are

1st order, 7, 19, 37, 61, 91, ···
2d order, 12, 18, 24, 30, ···
3d order, 6, 6, 6, ···

Hence, 1, 8, 27, 64, 125, 216, ··· is a difference series of the third order.

Similarly, 7, 19, 37, 61, 91, ··· is a difference series of the second order whose first order of differences is 12, 18, 24, 30, ···; and 12, 18, 24, 30, ··· is a difference series of the first order, also called an *equidifferent series*, or an *arithmetical series.*

616. To find the nth term of a difference series.

Let $a_1, a_2, a_3, \cdots$ denote the terms of a difference series, and let $d_1, d_2, d_3, \cdots$ denote the *first* terms, respectively, of the first, second, third, ··· orders of differences.

It is required to find the nth term of the series, or a_n, in terms of $a_1, d_1, d_2, d_3, \cdots$, that is, in terms of the *first* term of the series and the *first* term of each order of differences.

Series, $a_1, a_2, a_3, a_4, \cdots$
1st differences, $a_2 - a_1, a_3 - a_2, a_4 - a_3, \cdots$
2d differences, $a_3 - 2a_2 + a_1, a_4 - 2a_3 + a_2, \cdots$
3d differences, $a_4 - 3a_3 + 3a_2 - a_1, \cdots$; etc.

Since $d_1 = a_2 - a_1$,

transposing, $a_2 = a_1 + d_1$. (1)

Since $d_2 = a_3 - 2a_2 + a_1 = a_3 - 2(a_1 + d_1) + a_1$,

transposing, etc., $a_3 = a_1 + 2d_1 + d_2$. (2)

Since $d_3 = a_4 - 3a_3 + 3a_2 - a_1 = a_4 - 3(a_1 + 2d_1 + d_2) + 3(a_1 + d_1) - a_1$,

transposing, etc., $a_4 = a_1 + 3d_1 + 3d_2 + d_3$. (3)

If, as suggested by (1), (2), and (3), the coefficients in the formula for the nth term are the same as the coefficients in the expansion of the $(n-1)$th power of a binomial, then, the formula for the nth term is

$$a_n = a_1 + (n-1)d_1 + \frac{(n-1)(n-2)}{\lfloor 2}d_2 + \frac{(n-1)(n-2)(n-3)}{\lfloor 3}d_3 + \cdots. \quad (4)$$

Assuming that this formula is true for the nth term of a difference series, the nth term of the first order of differences, which is a difference series having d_2, d_3, $\cdots$ for the first terms of its orders of differences, respectively, is

$$a_{n+1} - a_n = d_1 + (n-1)d_2 + \frac{(n-1)(n-2)}{\lfloor 2}d_3 + \cdots. \quad (5)$$

Adding (4) and (5),

$$\begin{aligned} a_{n+1} &= a_1 + [(n-1)+1]d_1 + \frac{n-1}{\lfloor 2}[(n-2)+2]d_2 \\ &\quad + \frac{(n-1)(n-2)}{\lfloor 3}[(n-3)+3]d_3 + \cdots \\ &= a_1 + nd_1 + \frac{n(n-1)}{\lfloor 2}d_2 + \frac{n(n-1)(n-2)}{\lfloor 3}d_3 + \cdots. \end{aligned} \quad (6)$$

Since (6) has the same form as (4), $n+1$ simply taking the place of n, if the assumed law is true for the nth term it holds for the $(n+1)$th term. This law is true for the fourth and preceding terms, as shown in (1), (2), and (3). Hence, it holds for the fifth term, and being true for the fifth term it holds for the sixth, and so on.

Hence, (4) is the formula for any term.

617. To find the sum of n terms of a difference series.

To find the sum of n terms of the series $a_1, a_2, a_3, \cdots, a_n$, form an auxiliary series of which the given series is the first order of differences, as

$$0,\ a_1,\ a_1 + a_2,\ a_1 + a_2 + a_3,\ \cdots,\ a_1 + a_2 + a_3 + \cdots + a_n.$$

Then, the sum of the first n terms of the given series is the same as the $(n+1)$th term of the auxiliary series, which may be found by substituting 0 for a_1, a_1 for d_1, d_1 for d_2, etc., in (6), the formula for the $(n+1)$th term.

Denoting the sum of the first n terms by S_n,

$$S_n = na_1 + \frac{n(n-1)}{\lfloor 2}d_1 + \frac{n(n-1)(n-2)}{\lfloor 3}d_2 + \cdots. \qquad (7)$$

EXAMPLES

1. Find the 10th term and the sum of 10 terms of the series 1, 2, 6, 15, 31, ...

SOLUTION

Series,	1,	2,	6,	15,	31,	···
1st differences,	1,	4,	9,	16,	···	
2d differences,	3,	5,	7,	···		
3d differences,	2,	2,	···			

Therefore, by (4), $a_{10} = 1 + 9(1) + \frac{9\cdot 8}{1\cdot 2}(3) + \frac{9\cdot 8\cdot 7}{1\cdot 2\cdot 3}(2) = 286$;

and by (7), $S_{10} = 10(1) + \frac{10\cdot 9}{1\cdot 2}(1) + \frac{10\cdot 9\cdot 8}{1\cdot 2\cdot 3}(3) + \frac{10\cdot 9\cdot 8\cdot 7}{1\cdot 2\cdot 3\cdot 4}(2) = 835.$

NOTE. — Since each term of the fourth and of each succeeding order of differences is 0, all the terms after the fourth of (4) and (7) vanish.

Sum to 12 terms and find the 12th term:

2. $1^3, 2^3, 3^3, 4^3, \cdots$.
3. $1^4, 2^4, 3^4, 4^4, \cdots$.
4. 1, 8, 21, 40, 65, ...
5. 2, 8, 18, 33, 54, ...
6. 2, 7, 14, 23, 34, ...
7. $1^5, 2^5, 3^5, 4^5, 5^5, 6^5, 7^5, \cdots$.

618. Piles of spherical shot.

1. If the base of a pile of spherical shot is a triangle with n shot on a side, the next course has $n-1$ shot on a side, the next $n-2$, and so on; and if the pile is complete, the top course consists of a single shot. Calling this the first course, the second

course has 2 shot on a side and contains $2+1$ shot; the third has 3 shot on a side and contains $3+2+1$ shot; the fourth has 4 shot on a side and contains $4+3+2+1$ shot; and, in general, the nth course has n shot on a side and contains $n+(n-1)+(n-2)+\cdots+2+1$ shot, or $\frac{1}{2}n(n+1)$ shot.

Hence, when a pile of spherical shot has the form of a triangular pyramid the number of shot is

$$1+3+6+10+15+\cdots+\tfrac{1}{2}n(n+1).$$

Summing as a difference series,

series, $\quad 1,\ 3,\ 6,\ 10,\ 15,\ \cdots$

1st differences, $\quad 2,\ 3,\ 4,\ 5,\ \cdots$

2d differences, $\quad 1,\ 1,\ 1,\ \cdots$

$\therefore$ § 617, (7), $\quad S_n = n\cdot 1+\dfrac{n(n-1)}{\lfloor 2}\cdot 2+\dfrac{n(n-1)(n-2)}{\lfloor 3}\cdot 1,$

or $\quad S_n=\tfrac{1}{6}n(n+1)(n+2). \qquad (1)$

2. If the base is a square, the top shot rests upon 4 shot; these rest upon 9 shot; and in general, the nth course has n shot on a side, and contains n^2 shot.

Hence, when a pile of spherical shot has the form of a square pyramid, the number of shot is

$$1+4+9+16+\cdots+n^2.$$

Summing as in 1, $S_n=\frac{1}{6}n(n+1)(2n+1). \qquad (2)$

3. If the base is a rectangle n shot in width and $m+n$ shot in length, the top course is a row of $m+1$ shot; the second course contains $2(m+2)$ shot; the third, $3(m+3)$ shot; and so on.

Hence, the number of shot in a wedge-shaped pile with a rectangular base is

$$1(m+1)+2(m+2)+3(m+3)+\cdots+n(m+n).$$

Summing as a difference series,

series, $\quad (m+1),\ 2m+4,\ 3m+9,\ 4m+16,\ \cdots$

1st differences, $\quad m+3,\ m+5,\ m+7,\ \cdots$

2d differences, $\quad 2,\ 2,\ \cdots$

$\therefore$ § 617, $\quad S_n=n(m+1)+\dfrac{n(n-1)}{\lfloor 2}(m+3)+\dfrac{n(n-1)(n-2)}{\lfloor 3}\cdot 2,$

or $\quad S_n=\tfrac{1}{6}n(n+1)(3m+2n+1). \qquad (3)$

Problems

1. How many cannon shot are there in a triangular pyramidal pile whose bottom course has 10 shot on a side?

2. The base of a pyramid of round 10-inch shot is 10 feet square. How many shot does it contain?

3. How many shot are there in a wedge-shaped pile whose bottom course is a rectangle 9 shot in length and 7 shot in width?

4. How many 8-inch shot can be piled on a rectangular plot of ground 12 feet long and 10 feet wide?

5. Find the number of balls required to complete a triangular pyramid having 7 balls in each side of the top layer.

6. Find the number of balls required to complete a square pyramid having 100 balls in the top layer.

7. Find the number of courses of shot in a triangular pyramidal pile containing 165 shot.

8. How many balls are there in an incomplete wedge-shaped pile having 77 shot in the bottom layer and 21 shot in the upper layer?

9. A wedge-shaped pile of shot consisting of 10 layers contains 605 shot. How many shot are in the top row?

10. The number of shot in a square pyramid is $\frac{25}{14}$ of the number in a triangular pyramid having the same number of shot in each side of the base. How many shot are there in each pile?

11. A fruit seller had two pyramids of oranges composed of the same number of layers. One was a square pyramid and the other a triangular pyramid, and the square pyramid contained 84 more oranges than the triangular pyramid. How many oranges were there in each?

12. A fruit seller has a triangular pyramid of oranges, and wishes to make of them four square pyramids. How many oranges must he use for the base of each of the square pyramids, if the triangular pyramid has $2n$ layers?

619. Interpolation.

620. The process of inserting between two terms of a series numbers that obey the law of the series is called **Interpolation.**

621. When the law of the series is known, numbers may be interpolated between any two terms by applying the law.

Thus, in the arithmetical series 1, 9, 17, 25, ···, three numbers may be inserted, or interpolated, between 17 and 25 by substituting $3\frac{1}{4}$, $3\frac{1}{2}$, and $3\frac{3}{4}$ successively for n in the formula $l = a + (n-1)d = 1 + (n-1)8$. The three numbers obtained, namely, 19, 21, and 23, may be regarded as the $(3\frac{1}{4})$th, $(3\frac{1}{2})$th, and $(3\frac{3}{4})$th terms of the series, respectively.

When the law of the series is not known, intermediate terms may be found approximately by treating the series as a difference series, and giving n the proper values in the formula for the nth term.

Examples

1. Given $\log 20 = 1.3010$, $\log 21 = 1.3222$, $\log 22 = 1.3424$, $\log 23 = 1.3617$, $\log 24 = 1.3802$; to find $\log 22.5$ to the nearest ten-thousandth.

Solution

Series,	1.3010,	1.3222,	1.3424,	1.3617,	1.3802, ···
1st differences,	.0212,	.0202,	.0193,	.0185,	···
2d differences,	−.0010,	−.0009,	−.0008,	···	
3d differences,	.0001,	.0001,	···		

Hence, $a_1 = 1.3010$, $d_1 = .0212$, $d_2 = -.001$, and $d_3 = .0001$; also, since 22.5 lies halfway between 22 and 23, whose logarithms are the third and fourth terms of the series, $n = 3.5$.

Substituting these values in the formula for the nth term, § 616, (4),

$$\log 22.5 = 1.3010 + .053 - .001875 + .00003125 = 1.3522.$$

Note. — In the above example the third differences are not absolutely equal to each other, as may be seen by taking the given logarithms to more than four places of decimals, and, therefore, the fourth differences are not equal to zero. But the fourth differences and all succeeding them are so small that they may be disregarded when $\log 22.5$ is required to only four decimal places.

2. In the following table the surfaces and volumes of spheres whose diameters are 1, 2, ···, 5 are given. Find the surfaces and volumes of the spheres whose diameters are 3.1, 3.2, 3.7.

Diam.	1	2	3	4	5
Surf.	3.1416	12.5664	28.2744	50.2656	78.5400
Vol.	.5236	4.1888	14.1372	33.5104	65.4500

3. Given $\sqrt[3]{350} = 7.0472987$, $\sqrt[3]{351} = 7.0540041$, $\sqrt[3]{352} = 7.0606967$, $\sqrt[3]{353} = 7.0673767$, $\sqrt[3]{354} = 7.0740440$, to find the cube root of 350.6.

4. Given $\frac{1}{725} = .001379310$, $\frac{1}{730} = .001369863$, $\frac{1}{735} = .001360544$, $\frac{1}{740} = .001351351$, $\frac{1}{745} = .001342282$, to find the reciprocal of 736.

SERIES WHOSE *N*TH TERMS ARE FUNCTIONS OF *N*

622. The sum of the first n terms of a series is represented, in general, by S_n. But if the nth term of the series is a function of n, the sum of the first n terms may be represented by prefixing S_n to the nth term.

Thus, $S_n n^2$ means the sum of the first n squares; $S_5(2n-1)$ means $1+3+5+7+9$, the sum of the first 5 odd numbers.

623. Summation by undetermined coefficients.

When the nth term of a series has the form $a + bn + cn^2 + \cdots$, the series may be summed to n terms by employing undetermined coefficients.

Examples

1. Find the sum of the first n squares.

Solution. — Since each term of $1^2 + 2^2 + 3^2 + \cdots + n^2$ is a function of n, assume

$$S_n n^2 = A + Bn + Cn^2 + Dn^3 + En^4 + \cdots \quad (1)$$

and $$S_{n+1} n^2 = A + B(n+1) + C(n+1)^2 + D(n+1)^3 + E(n+1)^4 + \cdots. \quad (2)$$

Subtracting (1) from (2),

$$(n+1)^2 = B + C(2n+1) + D(3n^2+3n+1) + E(4n^3+6n^2+4n+1) + \cdots. \quad (3)$$

Since the first member involves no higher power of n than n^2, the undetermined coefficients of n^3, n^4, etc., in the second member equal 0; that is, they form a system of independent homogeneous linear equations in E, F, ….

Hence, § 565, E, F, … are separately equal to 0, and (3) becomes

$$n^2 + 2n + 1 = B + C(2n+1) + D(3n^2+3n+1)$$
$$= (B + C + D) + (2C + 3D)n + 3Dn^2.$$

$\therefore$ § 590, $B + C + D = 1$, $2C + 3D = 2$, $3D = 1$; $\therefore D = \frac{1}{3}$, $C = \frac{1}{2}$, $B = \frac{1}{6}$.

$\therefore 1^2 + 2^2 + 3^2 + \cdots + n^2 = A + \frac{1}{6}n + \frac{1}{2}n^2 + \frac{1}{3}n^3 = A + \frac{1}{6}n(n+1)(2n+1)$.

Since $S_1 n^2 = 1$, $1^2 = A + \frac{1}{6} \cdot 1 \cdot 2 \cdot 3$, whence $A = 0$.

$$\therefore 1^2 + 2^2 + 3^2 + \cdots + n^2 = \tfrac{1}{6}n(n+1)(2n+1).$$

Show by employing undetermined coefficients that:

2. $1 + 2 + 3 + \cdots + n = \frac{1}{2} n (n + 1)$.

3. $1^3 + 2^3 + 3^3 + \cdots + n^3 = \frac{1}{4} n^2 (n + 1)^2$.

4. $1^4 + 2^4 + 3^4 + \cdots + n^4 = \frac{1}{30} n (n + 1) (2 n + 1) (3 n^2 + 3 n - 1)$.

5. $1^2 + 3^2 + 5^2 + \cdots + (2 n - 1)^2 = \frac{1}{3} n (2 n + 1) (2 n - 1)$.

624. Compound series.

Some series may be summed readily by separating each term into two terms and adding the component series thus obtained.

EXAMPLES

1. Find the sum to n terms and to infinity of the series

$$\frac{2}{1 \cdot 2} + \frac{2}{2 \cdot 3} + \frac{2}{3 \cdot 4} + \cdots.$$

SOLUTION. — Separating the general term into two fractions having the same numerator,

$$\frac{2}{n(n+1)} = \frac{2}{n} - \frac{2}{n+1}.$$

Since this is true for each term of the series,

$$\begin{aligned} S_n &= \left(\frac{2}{1} - \frac{2}{2}\right) + \left(\frac{2}{2} - \frac{2}{3}\right) + \left(\frac{2}{3} - \frac{2}{4}\right) + \cdots + \left(\frac{2}{n} - \frac{2}{n+1}\right) \\ &= 2 + \frac{2}{2} + \frac{2}{3} + \cdots + \frac{2}{n-1} + \frac{2}{n} \\ &\quad - \frac{2}{2} - \frac{2}{3} - \cdots - \frac{2}{n-1} - \frac{2}{n} - \frac{2}{n+1} \\ &= 2 - \frac{2}{n+1} = \frac{2n}{n+1}. \end{aligned}$$

As n increases without limit, this sum approaches 2 as a limit.

Find the sum to n terms and to infinity of

2. $\frac{1}{1 \cdot 3} + \frac{1}{2 \cdot 4} + \frac{1}{3 \cdot 5} + \cdots.$

3. $\frac{3}{1 \cdot 4} + \frac{3}{2 \cdot 5} + \frac{3}{3 \cdot 6} + \cdots.$

4. $\frac{4}{1 \cdot 5} + \frac{4}{3 \cdot 7} + \frac{4}{5 \cdot 9} + \cdots.$

5. $\frac{1}{3 \cdot 5} + \frac{1}{5 \cdot 7} + \frac{1}{7 \cdot 9} + \cdots.$

6. $\frac{2}{2 \cdot 5} + \frac{2}{3 \cdot 6} + \frac{2}{4 \cdot 7} + \cdots.$

7. $\frac{2}{1 \cdot 3} - \frac{2}{2 \cdot 4} + \frac{2}{3 \cdot 5} - \cdots.$

FUNCTIONS OF A SINGLE VARIABLE

625. The general object of this chapter is the comparison of the corresponding values of x and certain functions of x. For this purpose x is regarded as a variable increasing continuously from an indefinitely large negative value, denoted by $-\infty$, to an indefinitely large positive value, denoted by $+\infty$.

TABULATION OF FUNCTIONS

626. By giving the independent variable x any values we choose, the corresponding values of any given function of x, as $\frac{1}{2}(x^2 - 6x)$, may be obtained. The manner in which the function changes with the independent variable may then be exhibited in a *table of corresponding values*. For example,

when $x =$	-2	-1	0	1	2	3	4	5	6	7	8
$\frac{1}{2}(x^2-6x) =$	8	$3\frac{1}{2}$	0	$-2\frac{1}{2}$	-4	$-4\frac{1}{2}$	-4	$-2\frac{1}{2}$	0	$3\frac{1}{2}$	8

Since $x^2 - 6x = x(x - 6)$, if $x > 6$ and increases without limit, $\frac{1}{2}(x^2 - 6x)$ will be positive and increase without limit. This is denoted by annexing to the above table the corresponding values $x = +\infty$, $\frac{1}{2}(x^2 - 6x) = +\infty$. Again, if x is negative and decreases without limit, $\frac{1}{2}(x^2 - 6x)$ will be positive and increase without limit. This is denoted by prefixing to the table the corresponding values $x = -\infty$, $\frac{1}{2}(x^2 - 6x) = +\infty$.

627. The symbol for any given function of x is $f(x)$, read 'function of x.' Other functions of x in a discussion may be represented, if desired, by $F(x)$, $\phi(x)$, $f'(x)$, etc., read 'large F function of x,' 'phi function of x,' 'f-prime function of x,' etc.

Since $f(x)$ is a *variable*, depending upon the value assigned to x, $f(x)$ is often represented by the variable y.

Values of $f(x)$ corresponding to particular values assumed for x, as 3, 0, -1, a, are usually indicated thus: $f(3)$, $f(0)$, $f(-1)$, $f(a)$.

If $f(x) = x^2 - 6x + 9$, $f(0) = 9$; $f(1) = 1 - 6 + 9 = 4$; $f(2) = 4 - 12 + 9 = 1$; $f(3) = 9 - 18 + 9 = 0$; and in general, $f(a) = a^2 - 6a + 9$.

628. A convenient method of substitution.

Let it be required to find the value of $x^3 + 4x^2 + 7x + 6$ when $x = 2$. The process of substituting 2 for x is similar to the arithmetical process of reducing a compound denominate number to a number of lower denomination.

PROCESS

$$\begin{array}{r} x^3 + 4x^2 + 7x + 6 \mid 2 \\ \underline{2x^2 + 12x + 38} \\ x^3 + 6x^2 + 19x \mid 44 = f(2) \end{array}$$

EXPLANATION. — Since $x = 2$, $x^3 = 2x^2$. Writing $2x^2$ under $4x^2$ and adding, the sum of the first two terms of $f(x)$ is equal to $6x^2$. Since $x = 2$, $6x^2 = 12x$. Writing $12x$ under $7x$ and adding, the sum of the first three terms of $f(x)$ is equal to $19x$. Since $x = 2$, $19x = 38$. Adding 38 to 6, the remaining term of $f(x)$, 44 is obtained for the value of $f(x)$ when $x = 2$; that is, $f(2) = 44$.

In practice only the detached coefficients are used, thus:

$$\begin{array}{r} 1 + 4 + 7 + 6 \mid 2 \\ \underline{2 + 12 + 38} \\ 1 + 6 + 19 \mid 44 \end{array} \quad \therefore f(2) = 44.$$

EXAMPLES

Tabulate the following functions of x for integral values of x between -5 and 5 and for $x = \pm\infty$:

1. $2x - 1$. 2. $x^3 - x^2 + x - 1$. 3. $x^3 - 6x^2 + 11x - 6$.

GRAPHICAL REPRESENTATION OF FUNCTIONS

629. Heretofore functions of x have been given a purely numerical interpretation. By representing the values of $f(x)$ by distances, it is possible to give a pictorial or *graphical* representation of the function passing through all its values as x increases continuously from $-\infty$ to $+\infty$. The function $\frac{1}{2}(x^2 - 6x)$ will be used for purposes of illustration.

630. Since the values of x and $\frac{1}{2}(x^2 - 6x)$ tabulated in § 626 are real, they may be represented *graphically* by distances from a zero

point on a horizontal line, positive distances being laid off toward the right and negative distances toward the left. But to avoid confusing the values of x and $f(x)$, it is customary to lay off the values of the function on or parallel to a second line crossing the first at right angles at the zero point, positive values of $f(x)$ being represented by distances measured upward and negative values by distances measured downward from the first line.

The first line is called the **X-axis**, and the second the **Y-axis**, the function of x being denoted by y.

Fig. 1 is a graphical representation of the manner in which the function $\frac{1}{2}(x^2 - 6x)$ changes with the independent variable x. See the table of corresponding values, § 626.

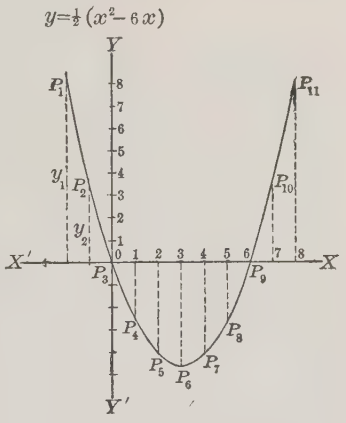

FIG. 1.

The point P_1, which is 2 units to the left of the zero point and at the same time 8 units above it, represents the state of the variable and the function when $x = -2$ and $f(x) = 8$. Similarly, P_2 represents the next state of the variable and the function, P_3 the next, and so on.

The lengths of the vertical dotted lines represent the values of y, or $f(x)$. They are called **ordinates**. For example, y_1 is the ordinate of P_1 and is equal to $f(-2)$, or 8.

The corresponding horizontal distances are called **abscissas**. For example, -2 is the abscissa of P_1.

The abscissa and ordinate of a point are called its **coördinates**.

The point whose abscissa is a and ordinate b is denoted by the symbol (a, b). The abscissa is always written first.

Thus, the point P_1 is represented by $(-2, 8)$.

If the successive values of x between any two finite values are taken sufficiently near together, the corresponding values of $y = \frac{1}{2}(x^2 - 6x)$ may be made to differ from each other as little as we please; that is, y varies *continuously* with x, or is a *continuous*

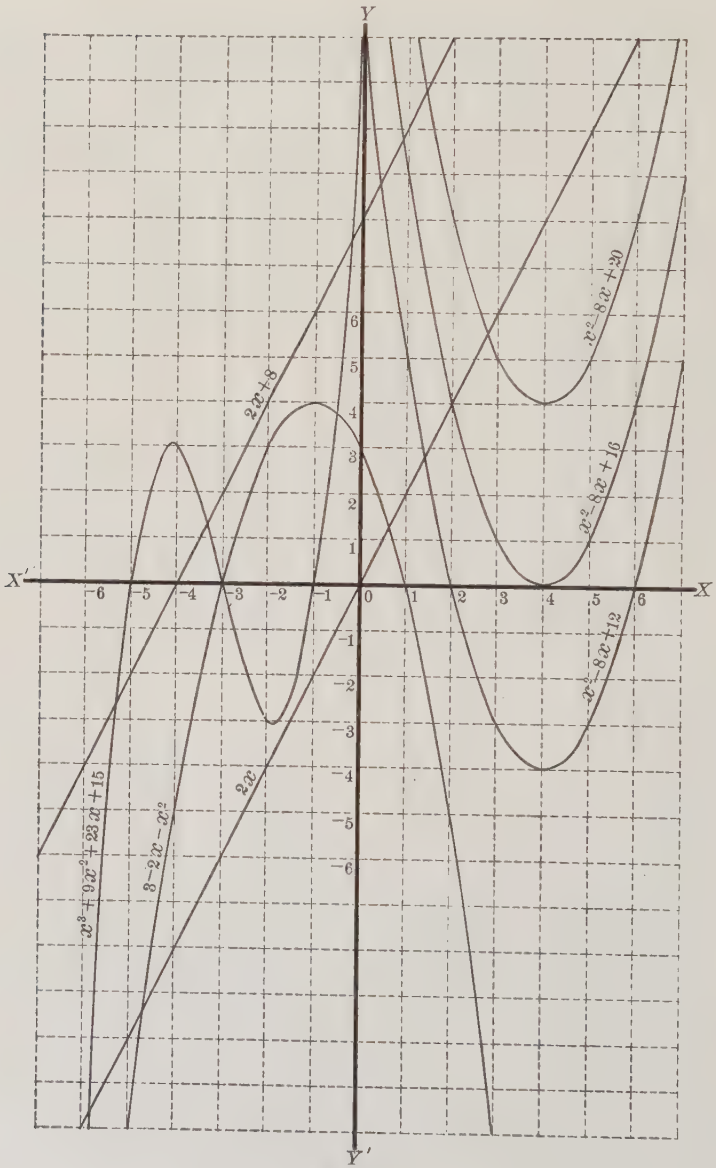

FIG. 2.

function of x (§ 435). Hence, the assemblage of all the points representing corresponding values of x and y form a continuous line.

This line, the coördinates of every point of which satisfy the equation $y = \frac{1}{2}(x^2 - 6x)$, is called the **Locus** of the equation $y = \frac{1}{2}(x^2 - 6x)$, or the **Graph** of the function $\frac{1}{2}(x^2 - 6x)$. Within the limits of the drawing it is represented by the curved line $P_1 P_2 P_3 \cdots P_{11}$.

The graphs of several functions of x are shown in Fig. 2.

631. Roots of $f(x) = 0$.

Consider the functions of x plotted in Fig. 2.

1. Since whenever the graph of a function crosses or touches the axis of x the ordinate of that point is equal to zero, the function is equal to zero for the value of x denoted by the corresponding abscissa. For example, $x^3 + 9x^2 + 23x + 15$ is equal to zero when $x = -5$ or -3 or -1, as shown by its graph crossing the axis of x at these points; that is, the graph of the function $x^3 + 9x^2 + 23x + 15$ shows that -5, -3 and -1 are *real roots* of the equation $x^3 + 9x^2 + 23x + 15 = 0$.

Again, $x^2 - 8x + 16 = 0$ when $x = 4$, as shown by its graph touching the axis of x at this point; that is, 4 is a *real root* of the equation $x^2 - 8x + 16 = 0$.

Hence, *the real roots of $f(x) = 0$ are represented graphically by the abscissas of the points where the graph of $f(x)$ crosses or touches the axis of x.*

2. Since, for all values of x, $x^2 - 8x + 20$ is 4 greater than $x^2 - 8x + 16$ and the latter is 4 greater than $x^2 - 8x + 12$, the graphs of these functions are exactly alike except in position.

Suppose, then, that the graph of $x^2 - 8x + 12$, which exhibits two *unequal* real roots, 2 and 6, is moved vertically to coincide with the graph of $x^2 - 8x + 16$. It is evident that the two unequal roots become more and more nearly equal as the graph is moved upward, and become equal when the graphs coincide.

Hence, *if the graph of $f(x)$ touches the axis of x but does not cross it or terminate in it, the abscissa of the point of tangency represents two equal real roots of $f(x) = 0$.*

3. Now suppose that the graph is moved vertically once more toward the graph of $x^2 - 8x + 20$. The graph ceases to touch

the axis of x, and we infer that there is no *real* value of x which, substituted for x, can reduce the function to zero.

This inference accords with the fact that the roots of $x^2 - 8x + 20 = 0$ are imaginary (§ 304, Prin. 1).

Hence, *if the graph of $f(x)$ has no point lying in the axis of x, all the roots of $f(x) = 0$ are imaginary.*

Examples

Plot the following functions of x, and discover from the graphs as much as possible concerning the roots of $f(x) = 0$:

In the following examples the student should substitute values of x close enough to each other to determine the form of the graph with some accuracy.

Cross-section paper is very useful in this work.

It is often convenient to plot the values of $f(x)$ to a smaller scale than that employed for the values of x.

1. $2x + 1$.
2. $x^2 - 5x + 4$.
3. $x^2 - 6x + 9$.
4. $1 - x^2$.
5. $x^2 - 2x - 1$.
6. $x^2 + 4$.
7. $x^3 - 6x^2 + 11x - 6$.
8. $x^3 - 7x + 6$.
9. $x^4 - 9x^3 + 22x^2 - 32$.

DERIVED FUNCTIONS

632. Another method of comparing the variation of $f(x)$ with that of x consists in determining for what values of x, if any, $f(x)$ increases or decreases when x increases continuously, and in finding how fast $f(x)$ is changing as compared with the corresponding changes in x.

633. Let $f(x)$ denote any function of x, and suppose that x is increased by a positive number h from the value a to the value $a + h$. Then h is called an **increment of the variable.**

Since the increment given to x produces a change in the value of the function from $f(a)$ to $f(a + h)$, the change in the function, $f(a + h) - f(a)$, is called an **increment of the function.**

In general, $f(x + h) - f(x)$ represents any increment of $f(x)$.

When $f(x)$ is increasing, the successive increments of the function are *positive*, and when $f(x)$ is decreasing, they are *negative*.

634. When equal increments of x produce equal increments in $f(x)$, as in the case of the functions $2x$ and $2x+8$, Fig. 2, the rate of change of $f(x)$ is *uniform* and may be obtained by finding the ratio of *any* increment of $f(x)$, however large or small, to the corresponding increment of x. When $f(x)$ does not vary uniformly with x, the rate of change of $f(x)$ with respect to x at any instant during a small interval is obtained approximately on the supposition that $f(x)$ varies uniformly with x during that interval.

The smaller the interval, then, or the smaller the value of h, the more nearly will the ratio $\dfrac{f(a+h)-f(a)}{h}$ represent the true rate of change of $f(x)$ as x changes from a to $a+h$.

Hence, the *limit* of this ratio as $h \doteq 0$ represents *the rate of change of* $f(x)$ *at the instant when* $x = a$.

The same is true for any value of x. Hence,

$$\lim.\left[\frac{f(x+h)-f(x)}{h}\right]_{h \doteq 0}$$

represents the rate of change of $f(x)$ *at any instant as compared with that of* x.

635. The limit of the ratio of the increment of $f(x)$ to the corresponding increment of x as the increment of x approaches the limit zero is called the **Derivative of the function with respect to** x, or the **First Derived Function of** x.

The formula for the derivative of $f(x)$ with respect to x is

$$\lim.\left[\frac{f(x+h)-f(x)}{h}\right]_{h \doteq 0}.$$

This is represented by $\dfrac{d}{dx} f(x)$.

Thus, $\dfrac{d}{dx}(x^2+2x)$ means the derivative with respect to x of x^2+2x.

Other notations are $D_x f(x)$, $\dfrac{d}{dx} y$, $\dfrac{dy}{dx}$, etc.

636. Since the derivative with respect to x of $f(x)$ is usually another function of x, which in turn may have a derivative with respect to x, which may have still another, and so on, the first derivative will be denoted by $f'(x)$, the second by $f''(x)$, the third by $f'''(x)$, and so on.

Successive derivatives are sometimes denoted by $f_1(x)$, $f_2(x)$, $f_3(x)$, etc.

These derived functions are called the **first derived function** of x, or the *derivative* of $f(x)$ with respect to x, the **second derived function** of x, and so on.

EXAMPLES

1. Find the derived functions of $x^2 - 8x + 12$.

SOLUTION. — Let $x^2 - 8x + 12 = f(x)$.

Then, $f(x+h) - f(x) = x^2 + 2hx + h^2 - (8x + 8h) + 12 - (x^2 - 8x + 12)$,

$$= 2hx - 8h + h^2.$$

$$\therefore \frac{f(x+h) - f(x)}{h} = 2x - 8 + h.$$

Taking the limit as $h \doteq 0$,

$$f'(x) = 2x - 8, \text{ the } \textit{first} \text{ derived function.}$$

Again, $f'(x+h) - f'(x) = [2(x+h) - 8] - (2x - 8)$

$$= 2h.$$

$$\therefore \frac{f'(x+h) - f'(x)}{h} = 2.$$

Taking the limit as $h \doteq 0$,

$$f''(x) = 2, \text{ the } \textit{second} \text{ derived function.}$$

Since the second derived function is a constant, its increment, and therefore its derivative, is zero. Hence, all derivatives of $x^2 - 8x + 12$ after the second vanish.

Find the successive derived functions of

2. $2x$. **4.** $x^2 - 8x$. **6.** $3 - 2x - x^2$.

3. $2x + 1$. **5.** $x^2 - 8x + 16$. **7.** $x^3 + 9x^2 + 23x + 15$.

637. A function that involves only integral powers of x and is integral with respect to x is called a rational **integral function of x**.

$x^2 + 1 + x^{-2}$ is rational but not integral with respect to x; $x^{\frac{3}{2}} + \frac{3}{2}x^{\frac{1}{2}}$ is integral but not rational with respect to x; $x^2 + 5x + 6$, $x^3 + \frac{1}{2}x^2 + 3x$, and $x^2 + \sqrt{2}x + 1$ are both rational and integral with respect to x, that is, are rational integral functions of x.

638. The general form of a rational integral function of x is

$$ax^n + bx^{n-1} + cx^{n-2} + \cdots + kx + l,$$

in which n is a positive integer, and a, b, c, $\cdots$, k, l do not involve x. But it is more convenient to use the form

$$x^n + px^{n-1} + qx^{n-2} + \cdots + sx + t,$$

which may be obtained by dividing the general form by a.

639. Derivative of a rational integral function of x.

Let $$f(x) = x^n + px^{n-1} + qx^{n-2} + \cdots + sx + t \qquad (1)$$

be a rational integral function of x.

Give x an increment h. Then,

$$f(x+h) = (x+h)^n + p(x+h)^{n-1} + q(x+h)^{n-2} + \cdots + s(x+h) + t. \qquad (2)$$

Expanding and arranging to ascending powers of h,

$$\left.\begin{aligned} f(x+h) = {} & x^n + px^{n-1} + qx^{n-2} + \cdots + sx + t \\ & + h\{nx^{n-1} + (n-1)px^{n-2} + (n-2)qx^{n-3} + \cdots + s\} \\ & + \frac{h^2}{\lfloor 2}\{n(n-1)x^{n-2} + (n-1)(n-2)px^{n-3} + \cdots\} \\ & \cdots\cdots\cdots\cdots\cdots \\ & + \frac{h^n}{\lfloor n}\{n(n-1)(n-2)\cdots 1\} \end{aligned}\right\} \qquad (3)$$

Subtracting $f(x)$ from the first member and its value given in (1) from the second, dividing the result by h, and taking the limit of the result as $h \doteq 0$, the terms in (3) involving h^2, h^3, $\cdots$, h^n vanish, and we have

$$\lim.\left[\frac{f(x+h) - f(x)}{h}\right]_{h \doteq 0} = nx^{n-1} + (n-1)px^{n-2} + (n-2)qx^{n-3} + \cdots + s;$$

that is, $$\frac{d}{dx}(x^n + px^{n-1} + qx^{n-2} + \cdots + sx + t)$$

$$= nx^{n-1} + (n-1)px^{n-2} + (n-2)qx^{n-3} + \cdots + s. \qquad (4)$$

Hence, *the derivative of a rational integral function of x is obtained by multiplying each term of $f(x)$ by the exponent of x in that term and diminishing the exponent of x by unity.*

Thus, $$\frac{d}{dx}(x^3 + 5x^2 + 7x - 4) = 3x^2 + 10x + 7.$$

640. Denoting the successive derived functions of x by $f'(x)$, $f''(x)$, $\cdots$,

$$\begin{aligned} f(x) &= x^n + px^{n-1} + qx^{n-2} + \cdots + sx + t, \\ f'(x) &= nx^{n-1} + (n-1)px^{n-2} + (n-2)qx^{n-3} + \cdots + s, \\ f''(x) &= n(n-1)x^{n-2} + (n-1)(n-2)px^{n-3} + \cdots, \\ f'''(x) &= n(n-1)(n-2)x^{n-3} + \cdots, \\ &\cdots\cdots\cdots\cdots\cdots\cdots \\ f^n(x) &= n(n-1)(n-2)\cdots 2 \cdot 1 \cdot x^0 = \lfloor n. \end{aligned}$$

Hence, (3) may be written

$$f(x+h)=f(x)+hf'(x)+\frac{h^2}{\lfloor 2}f''(x)+\frac{h^3}{\lfloor 3}f'''(x)+\cdots+h^n. \quad (5)$$

Formula (5) gives a process of substituting $x+h$ for x in a rational integral function of x. It is a special case of *Taylor's Formula.*

641. Continuity of a rational integral function of x.

By (5), § 640, if $f(x)$ is a rational integral function of x,

$$f(x+h)-f(x)=hf'(x)+\frac{h^2}{\lfloor 2}f''(x)+\frac{h^3}{\lfloor 3}f'''(x)+\cdots+h^n.$$

The first member is the increment of $f(x)$ produced by giving x the increment h. To determine whether the given function is continuous, it is only necessary to find whether an infinitesimal change in the variable produces an infinitesimal change in the function. Then, let $h \doteq 0$.

Since the second member consists of a finite number of terms and the coefficient of each power of h is finite for all values of x, as $h \doteq 0$ the second member approaches zero as a limit.

Hence, *every rational integral function of x is continuous for all finite values of x.*

642. Derivative of the product of two or more functions.

Let y and z be rational integral functions of x and let y' and z' be particular values of y and z corresponding to $x=a$.

To find the derivative of yz with respect to x, suppose that, as x increases from a to $a+h$, y changes from y' to $y'+k$ and z from z' to $z'+l$. If $h \doteq 0$, then, § 641, $k \doteq 0$ and $l \doteq 0$.

When $x=a$, $\dfrac{d}{dx}yz=\lim.\left[\dfrac{(y'+k)(z'+l)-y'z'}{h}\right]_{h \doteq 0}$

simplifying, $\qquad =\lim.\left[\dfrac{kz'+(y'+k)l}{h}\right]_{h \doteq 0}$

Then, since y' and z' are *constants,* and as $h \doteq 0$, $y'+k \doteq y'$,

$$\frac{d}{dx}yz=z'\lim.\left[\frac{k}{h}\right]_{h \doteq 0}+y'\lim.\left[\frac{l}{h}\right]_{h \doteq 0}$$

§ 635, $\qquad =z'\dfrac{d}{dx}y+y'\dfrac{d}{dx}z.$

Since this is true for each particular value of x,

$$\frac{d}{dx}yz = z\frac{d}{dx}y + y\frac{d}{dx}z.$$

Similarly, $\frac{d}{dx}v(yz) = yz\frac{d}{dx}v + v\frac{d}{dx}yz$

$$= yz\frac{d}{dx}v + zv\frac{d}{dx}y + vy\frac{d}{dx}z,$$

and so on for any number of variable factors. Hence,

The derivative with respect to x of the product of any number of rational integral functions of x is equal to the sum of the products obtained by multiplying the derivative of each function by the product of all the other functions.

Thus, $\frac{d}{dx}(x-a)(x-b)(x-c) = (x-b)(x-c)\frac{d}{dx}(x-a)$

$$+ (x-c)(x-a)\frac{d}{dx}(x-b)$$

$$+ (x-a)(x-b)\frac{d}{dx}(x-c)$$

$$= (x-b)(x-c) + (x-c)(x-a)$$

$$+ (x-a)(x-b).$$

Examples

1. Find the derivative with respect to x of $(x-1)(x-2)(x-3)$. Test the result by comparing it with the derivative with respect to x of the expanded product.

2. Find the first and second derived functions of $(x-1)^3(x+2)$ and express each in the form $(x-1)^n\phi(x)$.

MAXIMA AND MINIMA

643. In tracing the graph of $3 - 2x - x^2$, Fig. 2, conceive x to increase continuously from $-\infty$ to $+\infty$.

As x increases continuously up to -1, the function $3 - 2x - x^2$ increases continuously up to 4, and as x increases continuously from -1 to $+\infty$, the function decreases continously from 4 to $-\infty$. Hence, $3 - 2x - x^2$ is said to be an **increasing function of x** for values of x less than -1 and a **decreasing function of x** for values of x greater than -1.

644. Any value at which a continuous function of a variable ceases to be an increasing function and begins to be a decreasing function is called a *maximum* of the function. For example, 1 is a maximum of $3 - 2x - x^2$.

Any value at which a continuous function of a variable ceases to be a decreasing function and begins to be an increasing function is called a *minimum* of the function. For example, -4 is a minimum of $x^2 - 8x + 12$.

The maxima and minima of a function are called its *turning values*, or *critical values*.

CAUTION. — A maximum of a function is not necessarily its greatest value nor a minimum its least value, as may be seen in the graph of $x^3 + 9x^2 + 23x + 15$. (Fig. 2.)

645. The test for turning values is as follows:

If $f(a)$ is greater than either $f(a + h)$ or $f(a - h)$ however small h may be taken, then $f(a)$ is a maximum of $f(x)$.

If $f(a)$ is less than either $f(a + h)$ or $f(a - h)$ however small h may be taken, then $f(a)$ is a minimum of $f(x)$.

Thus, $3 - 2x - x^2$ is greater for $x = -1$ than for any other values of x in the vicinity of -1, however little they may differ from -1. Hence, $f(-1)$, or 4, is a maximum of $3 - 2x - x^2$.

646. Let $ax^2 + bx + c$ be any quadratic function of x having real coefficients. Placing the function equal to y and solving for x,

$$x = -\frac{b}{2a} \pm \frac{1}{2a}\sqrt{4ay - (4ac - b^2)}.$$

Considering only real values of x, $4ay - (4ac - b^2)$ must be positive or else equal to zero; that is,

$$4ay - (4ac - b^2) \geqq 0.$$

Therefore, §§ 401, 403,

if a is positive, $$y \geqq c - \frac{b^2}{4a},$$

but if a is negative, $$y \leqq c - \frac{b^2}{4a}.$$

In the first case y, or $ax^2 + bx + c$, may be as great as we please, but cannot be less than $c - \frac{b^2}{4a}$, which is therefore a *minimum*.

In the second case the function may be as small as we please, but cannot be greater than $c - \frac{b^2}{4a}$, which is therefore a *maximum*. Hence,

PRINCIPLE 1. — *Every quadratic function of the form* $ax^2 + bx + c$ *has one and only one critical value,* $c - (b^2 \div 4a)$, *which is a minimum or a maximum according as* a *is positive or negative. The corresponding value of* x *is* $-b \div 2a$.

Thus, $x^2 - 8x + 12$ has only one critical value, $12 - (64 \div 4)$, or -4, and this is a minimum because the coefficient of x^2 is positive; the corresponding value of x is $8 \div 2$, or 4. Again, $3 - 2x - x^2$ has only one critical value, $3 - (4 \div -4)$, or 4, and this is a maximum because the coefficient of x^2 is negative; the corresponding value of x is $2 \div -2$, or -1.

647. Let a be a value of x that makes $f(x)$ a maximum, and let h be a small positive number, as small as we please.

Then, however small h is, if $f(x)$ is continuous, by definition

$$f(a) > f(a \pm h). \tag{1}$$

Therefore, § 400, if k is any constant,

$$f(a) + k > f(a \pm h) + k; \text{ that is,}$$

PRINCIPLE 2. — *If* $f(a)$ *is a maximum of* $f(x)$, $f(a) + k$ *is a maximum of* $f(x) + k$; *similarly, if* $f(a)$ *is a minimum of* $f(x)$, $f(a) + k$ *is a minimum of* $f(x) + k$.

Thus, in Fig. 2, 0 is a minimum of $x^2 - 8x + 16$, 4 is a minimum of $x^2 - 8x + 16 + 4$, or $x^2 - 8x + 20$, and -4 is a minimum of $x^2 - 8x + 16 - 4$, or $x^2 - 8x + 12$.

Again, if $f(a)$ is a maximum of $f(x)$, by (1) and the principles of inequalities,

§ 402, $$-f(a) < -f(a \pm h);$$

also, § 403, $$mf(a) > mf(a \pm h);$$

also, § 403, provided $f(a)$ is not equal to zero, dividing (1) by $f(a)f(a \pm h)$,

$$\frac{1}{f(a \pm h)} > \frac{1}{f(a)}, \text{ or } \frac{1}{f(a)} < \frac{1}{f(a \pm h)}. \text{ Hence,}$$

PRINCIPLES. — 3. *If* $f(a)$ *is a maximum of* $f(x)$, $-f(a)$ *is a minimum of* $-f(x)$.

4. *If* $f(a)$ *is a maximum of* $f(x)$, $mf(a)$ *is a maximum of* $mf(x)$.

5. *If $f(a)$ is a maximum of $f(x)$, $\frac{1}{f(a)}$ is a minimum of $\frac{1}{f(x)}$.*

Thus, 4 is a maximum of $3 - 2x - x^2$ and -4 is a minimum of $x^2 + 2x - 3$, as may be discovered by applying Prin. 1 or by plotting their graphs; also, 8 is a maximum of $2(3 - 2x - x^2)$ and $\frac{1}{4}$ is a minimum of $\frac{1}{3 - 2x - x^2}$.

The same principles apply to minima of functions.

648. Let $f(x) = uv$, in which u and v are variables whose sum is constant, say $u + v = 2k$.

Since $(u - v)^2$ is positive except when $u = v$, from the identity

$$4uv = (u + v)^2 - (u - v)^2, \text{ or } 4uv = 4k^2 - (u - v)^2,$$

$4uv \leqq 4k^2$; $\therefore uv \leqq k^2$. Hence,

PRINCIPLE 6. — *If $f(x)$ is the product of two variable factors whose sum is constant, the square of half this sum is a maximum of $f(x)$.*

Since $3 - 2x - x^2 = (3 + x)(1 - x)$, the sum of the variable factors is 4, a constant; then, $(\frac{4}{2})^2$, or 4, is a maximum of the function. (See Fig. 2.)

Again, to find the critical value of $x^2 - 8x + 12$,

put $x^2 - 8x + 12 = (x - 6)(x - 2) = f(x)$.

Then, $(x - 6)(-x + 2) = -f(x)$.

Therefore, Prin. 6, $[\frac{1}{2}(x - 6 - x + 2)]^2$, or 4, is a maximum of $-f(x)$.

Hence, Prin. 3, -4 is a minimum of $f(x)$.

In geometrical language Prin. 6 is stated as follows: *Of all rectangles with equal perimeters, the square is the greatest.*

649. Let $f(x) = u + v$, in which u and v are variables whose product is constant, say $uv = k^2$.

Since $(u + v)^2 = 4uv + (u - v)^2$, and since $(u - v)^2$ is positive except when $u = v$, in which case $(u + v)^2 = 4uv$,

$$(u + v)^2 \geqq 4k^2; \text{ that is, } [f(x)]^2 \geqq 4k^2. \qquad (1)$$

Since both members of (1) are positive, $f(x)$ is *numerically* greater than $\pm 2k$ or else equal to $\pm 2k$. When $f(x)$ is positive, $f(x) \geq 2k$; and when $f(x)$ is negative, $f(x) \leqq -2k$. Hence,

PRINCIPLE 7. — *If $f(x)$ is the sum of two variables whose product is constant, twice the positive square root of this product is a minimum of $f(x)$ and twice the negative square root is a maximum.*

If $f(x) = \frac{x^2 + 9}{x} = x + \frac{9}{x}$, since $x \cdot \frac{9}{x} = 9$, a constant, 6 is a minimum and -6 a maximum of the function.

Examples

Find the critical values of the following functions:

1. $x^2 - 5x + 6$.
2. $x^2 + x - 30$.
3. $3x^2 - 4x - 15$.
4. $-x^2 - 4$.
5. $(x-3)(7-x)$.
6. $\left(1+\frac{1}{x}\right)\left(1-\frac{1}{x}\right)$.
7. $x + \frac{1}{x}$.
8. $x + \frac{1}{x} + 2$.

650. Critical values of continuous functions — change of sign of the first derived function.

Since the first derived function of $f(x)$ is the limit of the ratio of the increment of $f(x)$ to the increment of x as $h \doteq 0$, h being a positive increment, it follows that the function is increasing when $f'(x)$ is positive and decreasing when $f'(x)$ is negative, and *vice versa*.

Hence, *if the derivative of $f(x)$ changes sign as x increases through a, $f(a)$ is a critical value of the function.*

The value of a is found by solving the equation $f'(x) = 0$. For example, the value of x that renders $x^2 - 8x + 12$ a minimum is found by solving $2x - 8 = 0$, giving $x = 4$, whence, minimum $= f(4) = 16 - 32 + 12 = -4$. (See Fig. 2.)

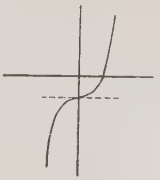

It does not always follow, however, that the values of x that satisfy the equation $f'(x) = 0$ correspond to critical values of $f(x)$. For the derivative may become equal to zero *without changing sign* as in the accompanying graph of $x^3 - 1$.

651. By (5), § 640, when $x = a$,

$$f(a+h) - f(a) = hf'(a) + \frac{h^2}{\lfloor 2}f''(a) + \frac{h^3}{\lfloor 3}f'''(a) + \cdots$$

and
$$f(a-h) - f(a) = -hf'(a) + \frac{h^2}{\lfloor 2}f''(a) - \frac{h^3}{\lfloor 3}f'''(a) + \cdots.$$

Suppose that $f(a)$ is a critical value of $f(x)$. Then, § 650,

$$f(a+h) - f(a) = \frac{h^2}{\lfloor 2}f''(a) + \frac{h^3}{\lfloor 3}f'''(a) + \cdots$$

and
$$f(a-h) - f(a) = \frac{h^2}{\lfloor 2}f''(a) - \frac{h^3}{\lfloor 3}f'''(a) + \cdots.$$

If h is taken sufficiently small, the terms in $h^3, h^4, \cdots$ may be neglected. Hence, if $f(a)$ is a critical value of $f(x)$, $f''(a)$ has the same sign as $f(a+h) - f(a)$ or $f(a-h) - f(a)$. But by the test of a critical value, § 645, $f(a+h) - f(a)$ and $f(a-h) - f(a)$ are both negative when $f(a)$ is a maximum and both positive when $f(a)$ is a minimum.

Hence, *if the first derived function of $f(x)$ changes sign when $x = a$, $f(a)$ is a maximum or a minimum of $f(x)$ according as the second derived function is negative or positive for $x = a$.*

652. Discontinuous Functions.

653. When the increment of a function of a variable corresponding to an infinitesimal increment of the variable is not infinitesimal, the function is called a **Discontinuous Function.**

Let h be any increment of x in $f(x)$.

Then, $f(x)$ is discontinuous for $x = a$, if the difference between $f(a+h)$ and $f(a-h)$ cannot be made as small as we please by taking h sufficiently small.

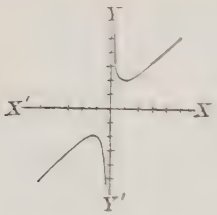

The function $x + \frac{1}{x}$ is a discontinuous function as may be seen from its graph. For as x changes from a very small negative number to a very small positive number, the function changes from a very large negative number to a very large positive number; and the smaller the increment of x as x passes through zero, the greater is the increment of the function. Hence, the function is discontinuous for $x = 0$.

For all other values of x, however, the function is continuous.

The graph has two parts called *branches*, one in the third quadrant corresponding to negative values of x, the other in the first quadrant corresponding to positive values of x.

654. Let h and k be corresponding increments of x and $f(x)$.

If the ratio $\frac{k}{h}$ is always finite as $h = 0$, k may be made as small as we please by taking h sufficiently small; that is, *the function is continuous if its dericatice is finite for all values of x.*

If the limit of this ratio can become infinite for some value of x, an infinitesimal change in x may produce a finite or infinite change in $f(x)$; that is, *the function is discontinuous for $x = a$ if the first derivative increases or decreases without limit as $x \doteq a$.*

Thus, $x + \frac{1}{x}$ is discontinuous for $x = 0$; for the first derivative of $x + x^{-1}$ is $1 - x^{-2}$, or $1 - \frac{1}{x^2}$, which increases or decreases without limit as $x \doteq 0$.

Examples

1. Discuss the function $x^3 + 9x^2 + 23x + 15$. (See Fig. 2.)

Discussion. — Since the function is rational and integral with respect to x, it is continuous. Tabulating the values of x and $f(x)$,

$x =$	$-\infty$	-6	-5	-4	-3	-2	-1	0	1	2	$+\infty$
$f(x) =$	$-\infty$	-15	0	3	0	-3	0	15	48	105	$+\infty$

This shows that the curve begins in the third quadrant, crosses the axis of x three times, giving the three real roots -5, -3, and -1, crosses the axis of y at the point (0, 15), and extends indefinitely upward in the first quadrant; also that the function is an increasing function up to some value in the interval between $x = -5$ and $x = -3$, then a decreasing function to some value in the interval between $x = -3$ and $x = -1$, and thereafter an increasing function. To find the turning values, put $f'(x) = 0$.

Then, $$f'(x) = 3x^2 + 18x + 23 = 0.$$

Solving, $x = -3 \pm \frac{2}{3}\sqrt{3} = -4.155$ or -1.845, approximately.

Substituting these values in the second derived function $6x + 18$, -4.155 makes $f''(x)$ negative and -1.845 makes $f''(x)$ positive.

Hence, § 651, $f(-4.155)$ is a maximum and $f(-1.845)$ is a minimum.

The graph may now be plotted completely.

Discuss and plot the following functions:

2. $x^3 - 6x^2 + 11x - 6$.
3. $x^2 + 1$.
4. $x^2 - 10x + 25$.
5. $x^3 - 7x + 6$.
6. $x^4 - 5x^2 + 4$.
7. $x + 4x^{-1}$.

8. Show that first degree functions of x have no critical values and that their graphs are straight lines.

9. Plot the graphs of $x^3 + x^2 - 5x + 3$ and its derived functions. What root has $f'(x) = 0$ when $f(x) = 0$ has two equal roots?

THEORY OF EQUATIONS

655. Changing an equation to another whose roots are the same as the roots of the given equation is called **Reducing** the equation.

656. Changing an equation to another whose roots have known relations to the roots of the given equation is called **Transforming** the equation.

657. Every simple equation may be reduced to the form $ax+b=0$; every quadratic equation to the form $ax^2+bx+c=0$; every equation of the third degree, or **cubic** equation, to the form $ax^3+bx^2+cx+d=0$; every equation of the fourth degree, or **biquadratic** equation, to the form $ax^4+bx^3+cx^2+dx+e=0$; etc.

Hence, these equations are called the **general equations** of the 1st, 2d, 3d, 4th, $\cdots$ degrees in x.

The **general equation of the *n*th degree in *x*** has the form

$$ax^n+bx^{n-1}+cx^{n-2}+\cdots+kx+l=0.$$

658. Dividing both members of the general equation of the nth degree in x by the coefficient of x^n, the resulting equation takes the form

$$x^n+px^{n-1}+qx^{n-2}+\cdots+sx+t=0,$$

in which the coefficient of the highest power of x is 1.

This equation is called the **reduced equation** of the nth degree in x. The first member is a rational integral function of x (§ 638), and in this chapter the equation will often be written in the brief form $f(x)=0$.

The absolute term t may be regarded as the *coefficient* of x^0.

The coefficients p, q, $\cdots$, s, t may be positive or negative or equal to zero, integral or fractional, rational or irrational, real

or imaginary. But unless the contrary is stated, it will be understood that they are rational and real.

If no coefficient is equal to zero, the equation is *complete;* if any coefficient is equal to zero, the equation is *incomplete.*

659. Divisibility of $f(x) = 0$.

Let the first member of $f(x) = 0$ be divided by $x - a$ until the remainder no longer involves x.

Denote the quotient by Q and the remainder by R.

Then, $$f(x) = (x - a)\,Q + R. \qquad (1)$$

Since R does not involve x, R has the same value whatever value x has. To find R, then, let $x = a$.

When a is substituted for x, $f(x)$ becomes $f(a)$ by the definition of $f(a)$; and the second member of (1) becomes $0 \cdot Q + R$, or R.

$\therefore f(a) = R$; that is, $R = f(a)$. Hence,

PRINCIPLE 1. — *If $f(x)$ is divided by $x - a$, the remainder is $f(a)$.* Consequently,

COROLLARY 1. — *If $f(a) = 0$, that is, if a is a root of the equation $f(x) = 0$, $f(x)$ is divisible by $x - a$* (Factor Theorem), *and conversely, if $f(x)$ is divisible by $x - a$, then $f(a) = 0$ and a is a root of the equation $f(x) = 0$.*

Principle 1 is sometimes called the *Remainder Theorem.* The Factor Theorem, § 136, is a special case of the Remainder Theorem.

If the coefficients of $x^n + px^{n-1} + qx^{n-2} + \cdots + sx + t = 0$ are all integers, the first member cannot be divisible by $x - a$ unless a is a factor of t. Hence,

COROLLARY 2. — *If $f(x)$ has integral coefficients, every integral root of $f(x) = 0$ must be a factor of the absolute term.*

660. Number of roots.

Since by Prin. 1, Cor. 1, to every root of the equation $f(x) = 0$ there corresponds a factor of $f(x)$ of the form $x - a$, and, conversely, to every factor of this form there corresponds a root of the equation $f(x) = 0$, it may be inferred that:

PRINCIPLE 2. — *Every equation of the nth degree in x has n and only n roots.*

This principle cannot be proved until it has been proved that every equation has at least one root — a fact too difficult of proof for this work. But assuming that every equation has at least one root, Prin. 2 may be established conditionally as follows:

If $f(x) = x^n + px^{n-1} + qx^{n-2} + \cdots + sx + t = 0$ has a root, let it be a.

Dividing both members by $x - a$, an equation of the $(n-1)$th degree is obtained. If this has a root, let it be b. Dividing both members by $x - b$, an equation of the $(n-2)$th degree is obtained. By continuing this process $f(x)$ is resolved into n factors of the form $x - a$. Denoting these by $x - a$, $x - b$, $\cdots$, $x - k$,

$$f(x) = (x - a)(x - b) \cdots (x - k).$$

Since the substitution of any one of the n numbers a, b, $\cdots$, k will reduce $f(x)$ to zero, the equation $f(x) = 0$ has these n numbers for roots. And since the substitution of any other number than one of these will not reduce $f(x)$ to zero, $f(x) = 0$ has no other roots.

NOTE. — In counting the roots, equal roots are regarded as different roots.

661. If a is a root of the equation $f(x) = 0$, then, by Prin. 1, Cor. 1, $f(x)$ is divisible by $x - a$. Removing the root a by dividing both members of $f(x) = 0$ by $x - a$ is called **depressing** the equation $f(x) = 0$ to an equation of the next lower degree, and this equation is called the **depressed equation.**

662. Horner's method of synthetic division.

Horner's method of synthetic division is an abridgment of the method of division by detached coefficients.

In dividing $5x^5 + 8x^4 + 12x^3 + 24x^2 - 5x + 7$ by $x^3 + 2x^2 + 3x + 5$, the process of division by detached coefficients is modified as follows:

Divisor with last three signs changed	1	$5 + 8 + 12 + 24 - 5 + 7$	Dividend
	-2	$-10 - 15 - 25$	
	-3	$+ 4 + 6 + 10$	
	-5	$- 2 - 3 - 5$	
Quotient		$5 - 2 + 1 \mid 3 + 2 + 2$	Remainder

EXPLANATION. — By using the first term of the divisor as a trial divisor and changing the sign of each term of the divisor after the first, it is possible to substitute for the process of subtracting the partial products that of *adding* the products obtained by multiplying the terms of the divisor after the first, *with their signs changed*, by the successive terms of the quotient.

Thus, dividing the coefficient of the first term of the dividend by the coefficient of the first term of the divisor, 5 is obtained for the coefficient of the

first term of the quotient. Multiplying the coefficients of the other terms of the divisor *with their signs changed* by 5 gives the second horizontal line of the process, $-10-15-25$, which is *added* to the dividend. At present, however, only the term -10 is added.

Adding $+8$ and -10, the terms in the second column, and dividing the sum by 1, the coefficient of the first term of the divisor, -2 is obtained for the coefficient of the next term of the quotient. Multiplying the coefficients of the last three terms of the modified divisor by this term of the quotient gives the third horizontal line of the process.

Adding $+12$, -15, and $+4$, the terms in the third column, and dividing the sum by the coefficient of the first term of the divisor, $+1$ is obtained for the coefficient of the next term of the quotient. Multiplying the coefficients of the last three terms of the modified divisor by this term of the quotient gives the fourth horizontal line of the process.

Adding $+24$, -25, $+6$, and -2, the terms in the fourth column, the sum is 3, which stands for $3x^2$. Since this term is of lower degree than the first term of the divisor, $5x^2-2x+1$ is the entire quotient, and $3x^2$ is the first term of the remainder. Adding the last two columns, the entire remainder is $3x^2+2x+2$.

663. When the divisor is a binomial of the form $x+a$, the first term is not written, and the second term *with its sign changed* is written at the right of the dividend. Also, since each partial product consists of but one term, all the partial products are written in the same line under the dividend. For example, the process of dividing x^3+4x^2+7x+6 by $x-2$ is as follows:

Dividend	$1+4+7+6 \mid 2$	
Partial products	$\quad 2+12+38$	
Quotient	$1+6+19 \mid 44$	Remainder

That is, the quotient is $x^2+6x+19$ and the remainder 44.

It is seen that *the process of dividing $f(x)$ by $x-2$ is identical with the process of substituting 2 for x by detached coefficients* (§ 628), the remainder being the value of the function when $x=2$. This illustrates the meaning of Prin. 1.

Examples

Divide by synthetic division:

1. $x^4+x^3-3x^2-17x-30$ by $x-3$; by $x+2$.
2. $x^5+4x^4-6x^3-x+2$ by $x-1$; by $x+1$.

3. $2x^5 - 7x^4 - 16x^3 - x^2 + 32x - 10$ by $x - 5$; by $x - 1$.

4. $2x^5 - 5x^4 + 4x^3 - 22x + 21$ by $x^2 - 2x + 3$.

664. To find the commensurable roots of $f(x) = 0$ by trial.

EXAMPLES

1. Solve $f(x) = x^5 - 8x^4 + 15x^3 + 20x^2 - 76x + 48 = 0$.

SOLUTION

$$\begin{array}{r|l} 1 - 8 + 15 + 20 - 76 + 48 & 1 \\ \quad 1 - 7 + 8 + 28 - 48 & \\ \hline 1 - 7 + 8 + 28 - 48 & 2 \\ \quad 2 - 10 - 4 + 48 & \\ \hline 1 - 5 - 2 + 24 & -2 \\ \quad -2 + 14 - 24 & \\ \hline 1 - 7 + 12 & \end{array}$$

That is, $x^2 - 7x + 12 = 0$, or $(x - 3)(x - 4) = 0$.

$\therefore x = 1, 2, -2, 3, 4.$

EXPLANATION. — By Prin. 1, Cor. 2, every integral root of the equation must be a factor of 48. Substituting 1 for x the result is zero, and therefore 1 is a root of the equation; also since the process of substituting 1 for x is identical with that used to divide $f(x)$ by $x - 1$, the remainder is zero, and the depressed equation is $x^4 - 7x^3 + 8x^2 + 28x - 48$. This equation must have the other roots of the given equation.

Similarly, removing the root 2 from the depressed equation, the next depressed equation is $x^3 - 5x^2 - 2x + 24 = 0$. Removing the root -2 from this equation, the quadratic $x^2 - 7x + 12 = 0$ is obtained, whose roots are 3 and 4.

Hence, the roots of $f(x) = 0$ are 1, 2, -2, 3, and 4.

Solve by trial:

2. $x^3 - 9x^2 + 23x - 15 = 0$.

3. $x^3 - 10x^2 + 29x - 20 = 0$.

4. $x^3 - 7x + 6 = 0$.

5. $x^4 - 9x^2 + 4x + 12 = 0$.

6. $x^3 - 10x^2 + 33x - 36 = 0$.

7. $x^4 - 9x^3 + 21x^2 + x - 30 = 0$.

8. $5x^4 - 2x^3 - 35x^2 - 16x + 12 = 0$.

9. $2x^5 - x^4 - 12x^3 + 7x^2 + 16x - 12 = 0$.

665. Newton's method of divisors.

The following method of limiting the number of factors of the absolute term to be tried for roots is rarely expedient but is useful as a check.

Let a be an integral root of the equation

$$f(x) = x^n + px^{n-1} + qx^{n-2} + \cdots + rx^2 + sx + t = 0,$$

and suppose that all the coefficients are integers.

Then, $a^n + pa^{n-1} + qa^{n-2} + \cdots + ra^2 + sa + t = 0.$

Transposing and dividing by a,

$$\frac{t}{a} = -s - ra - \cdots - qa^{n-3} - pa^{n-2} - a^{n-1}.$$

Hence, $\frac{t}{a}$ is an integer.

Denoting the quotient by Q_1, and transposing $-s$,

$$Q_1 + s = -ra - \cdots - qa^{n-3} - pa^{n-2} - a^{n-1}.$$

Dividing again by a,

$$\frac{Q_1 + s}{a} = -r - \cdots - qa^{n-4} - pa^{n-3} - a^{n-2}, \text{ an integer.}$$

Denoting this quotient by Q_2 and continuing the process, the result of the nth division is

$$\frac{Q_{n-1} + p}{a} = -1.$$

Let d be an exact divisor of the absolute term of $f(x) = 0$.

Then, by the above discussion we have the following:

RULE. — *Divide the absolute term by d and add the quotient to the coefficient of x; divide the sum by d, and if the quotient is an integer, add it to the coefficient of x^2; continue this process as long as the quotients are integers or to n divisions.*

If each quotient is integral and the nth quotient is -1, then d is a root of the equation; otherwise d is not a root.

Thus, -2 is a root of $x^3 - 3x^2 - 16x - 12 = 0$, but 3 and 2 are not roots, as shown by the following processes:

$1 - 3 - 16 - 12 \mid -2$	$1 - 3 - 16 - 12 \mid 3$	$1 - 3 - 16 - 12 \mid 2$
$-1 + 5 + 6$	-4	$-7 - 11 - 6$
$0 + 2 - 10$	-20	$-14 - 22$

666. Relation between the roots and coefficients of an equation.

Since the reduced equation of the nth degree in x is the product of n equations of the first degree of the form $x - a = 0$, an equation may be formed from its roots by subtracting each from x and equating to zero the product of the n binomials thus formed.

Thus, suppose $x = a,\ b,\ c,\ d.$

Then, $x - a = 0,\ x - b = 0,\ x - c = 0,\ x - d = 0.$

$$\therefore\ (x-a)(x-b)(x-c)(x-d) = 0,$$

or

$$\begin{array}{l|l|l|l} x^4 - a & x^3 + ab & x^2 - abc & x + abcd = 0. \\ \quad - b & \quad + ac & \quad - abd & \\ \quad - c & \quad + ad & \quad - acd & \\ \quad - d & \quad + bc & \quad - bcd & \\ & \quad + bd & & \\ & \quad + cd & & \end{array}$$

Comparing the coefficients of the above equation with its roots a, b, c, d, *with their signs changed*, the following rule for finding the coefficients when the roots are given is obtained:

Rule. — *The coefficient of the first term of* $f(x) = 0$ *is* 1; *the coefficient of the second term is the sum of the roots with their signs changed; the coefficient of the third term is the sum of the products of the roots with their signs changed, taken two at a time; and, in general, the coefficient of the* $(r + 1)$*th term is the sum of the products of the roots with their signs changed, taken* r *at a time.*

The absolute term is the product of all the roots with their signs changed.

1. If the second term is wanting, the sum of the roots is 0.
2. If the absolute term is wanting, one root at least is 0.

Examples

Form the equations whose roots are:

1. 1, 2, 3.
2. 2, 3, 5.
3. $-1, -3,$
4. $1, 1, -\frac{1}{2}$.
5. $2, -\frac{1}{2} \pm \sqrt{5}$.
6. $1, -\frac{1}{2} \pm \frac{1}{2}\sqrt{-3}$.

667. It has been shown that the relations subsisting between the roots and coefficients of an equation may be expressed by n conditional equations, sufficient to determine the coefficients when

the roots are known. It might be supposed, therefore, that when the coefficients are known the roots may be found by aid of their relations to the coefficients. It is not advantageous, however, to endeavor to find the roots in this way, except when some particular relation between the roots is given in addition.

Thus, if the roots of $x^3 + px^2 + qx + r = 0$ are to be found by means of their relations to the coefficients p, q, and r, denoting the roots by a, b, and c,

$$\begin{cases} a + b + c = -p, \\ ab + ac + bc = q, \\ abc = -r. \end{cases}$$

Eliminating any two of the three unknown numbers, as b and c, it is found that the solution of the system depends upon the solution of an equation of the form

$$a^3 + pa^2 + qa + r = 0,$$

which is as difficult to solve as the given equation, being of the same form.

The following examples illustrate the method of solving an equation by means of the general relations between its roots and coefficients when the roots also have some given relation.

Examples

1. Solve the equation $48\,x^3 - 74\,x^2 + 37\,x - 6 = 0$, whose roots are in geometrical progression.

Solution. — Represent the roots by $\frac{a}{r}$, a, and ar.

Then, § 666, $$-\frac{a}{r} - a - ar = -\frac{74}{48}, \tag{1}$$

and $$\frac{a^2}{r} + a^2 + a^2 r = \frac{37}{48}. \tag{2}$$

Dividing (2) by (1), $$-a = -\tfrac{1}{2}, \text{ or } a = \tfrac{1}{2}. \tag{3}$$

Substituting in (1), $$r = \tfrac{3}{4} \text{ or } \tfrac{4}{3}. \tag{4}$$

Testing these values in the third equation of condition by which the absolute term is found from the roots,

$$\left(-\frac{a}{r}\right)(-a)(-ar), \text{ or } -a^3 = -\frac{6}{48} = -\left(\frac{1}{2}\right)^3,$$

by (3) they satisfy this relation.

Hence, the roots are $\tfrac{2}{3}$, $\tfrac{1}{2}$, $\tfrac{3}{4}$, when $r = \tfrac{3}{4}$;

or $\tfrac{3}{4}$, $\tfrac{1}{2}$, $\tfrac{2}{3}$, when $r = \tfrac{4}{3}$.

2. Solve $9x^3 - 7x + 2 = 0$, if one root is double another.

3. Solve $9x^3 - 27x^2 + 23x - 5 = 0$, whose roots are in A.P.

4. Solve the equation $x^3 - 12x + 16 = 0$, which has two equal roots.

5. Solve $2x^4 - 7x^3 - 6x^2 + 44x - 40 = 0$, which has three equal roots.

6. Solve $72x^4 + 90x^3 - 5x^2 - 40x - 12 = 0$, two of whose roots are numerically equal but opposite in sign.

7. Solve $6x^3 - 11x^2 + 6x - 1 = 0$, whose roots are in H.P.

8. Find the relation subsisting between the coefficients of the equation $x^3 + px^2 + qx + r = 0$, when two roots are numerically equal but opposite in sign, and by the aid of this relation solve the equation $x^3 - 5x^2 - 4x + 20 = 0$.

668. Fractional roots.

If possible, suppose that $\frac{a}{b}$, a *rational* fraction in its lowest terms, is a root of the equation

$$f(x) = x^n + px^{n-1} + qx^{n-2} + \cdots + sx + t = 0,$$

whose coefficients 1, p, q, $\cdots$, s, t are *integers.*

Substituting this root for x and multiplying both members by b^{n-1},

$$\frac{a^n}{b} + pa^{n-1} + qa^{n-2}b + \cdots + sab^{n-2} + tb^{n-1} = 0;$$

whence, $$\frac{a^n}{b} = -(pa^{n-1} + qa^{n-2}b + \cdots + sab^{n-2} + tb^{n-1}),$$

which is impossible, because the first member is a fraction in its lowest terms and the second member is an integer. Hence,

PRINCIPLE 3. — *If the coefficient of the highest power of x in $f(x) = 0$ is 1 and all the other coefficients are integers, no rational fraction can be a root of the equation.*

669. Imaginary roots and quadratic factors of $f(x)$.

In the following pages every complex or pure imaginary *root*, that is, every root involving an imaginary number, will be called an **imaginary root.**

Let $a + b\sqrt{-1}$ and $a - b\sqrt{-1}$, in which a and b are real, b is positive, and a is positive or zero, be substituted for x in an equation $f(x) = 0$ having positive integral exponents and *real* coefficients.

Then, $f(a+b\sqrt{-1}) = (a+b\sqrt{-1})^n + p(a+b\sqrt{-1})^{n-1} + \cdots + s(a+b\sqrt{-1}) + t,$ (1)

and $f(a-b\sqrt{-1}) = (a-b\sqrt{-1})^n + p(a-b\sqrt{-1})^{n-1} + \cdots + s(a-b\sqrt{-1}) + t.$ (2)

Since all the exponents are positive integers, (1) and (2) may be fully expanded. Each will then consist of terms of three kinds, those which do not involve b, those which involve even powers of $b\sqrt{-1}$, and those which involve odd powers of $b\sqrt{-1}$. Terms belonging to the first and second classes will be real, and to the third class, imaginary.

Since the two complex numbers are alike except in the terms involving b, the sum of the terms that do not involve b is the same in (2) as in (1). Represent this sum by S.

Since any even power of $-b\sqrt{-1}$ is equal to the same power of $b\sqrt{-1}$, the sum of the terms involving even powers of $b\sqrt{-1}$ is the same in (2) as in (1). Represent this sum by P.

Since any odd power of $-b\sqrt{-1}$ is numerically equal to the same power of $b\sqrt{-1}$ but opposite in sign, if the sum of those terms that involve odd powers of $b\sqrt{-1}$ in (1) is denoted by $Q\sqrt{-1}$, the sum of the corresponding terms in (2) is $-Q\sqrt{-1}$.

Hence, $f(a+b\sqrt{-1}) = S + P + Q\sqrt{-1},$ (3)

and $f(a-b\sqrt{-1}) = S + P - Q\sqrt{-1}.$ (4)

Now suppose that one of the conjugate complex or imaginary numbers, as $a+b\sqrt{-1}$, is a root of the equation $f(x)=0$.

Then, $S + P + Q\sqrt{-1} = 0.$ (5)

Since the real number $(S+P)$ can cancel no part of the imaginary number $Q\sqrt{-1}$, each must be equal to zero.

Therefore, $S + P - Q\sqrt{-1} = 0;$ (6)

that is, $a-b\sqrt{-1}$ also is a root of the equation. Hence,

PRINCIPLE 4. — *If the equation $f(x)=0$ has real coefficients, its imaginary roots, if any, occur in conjugate pairs.*

COROLLARIES. — 1. *To every pair of imaginary roots there corresponds a quadratic factor of $f(x)$ of the form $(x-a)^2+b^2$.*

2. *If the equation $f(x)=0$ is of an odd degree, it has at least one real root.*

Examples

1. One of the roots of the equation $x^4-2x^3+10x^2-8x+24=0$ is $1+\sqrt{-5}$. Solve the equation.

Solution. — Since the coefficients are all real, the given root must enter the equation with its conjugate in the quadratic factor

$$(x-1-\sqrt{-5})\,(x-1+\sqrt{-5}),\ \text{or}\ x^2-2x+6.$$

Removing this factor by synthetic division, the depressed equation is $x^2+4=0$, whose roots are $2\sqrt{-1}$ and $-2\sqrt{-1}$.

Hence, the roots of the given equation are $1\pm\sqrt{-5},\ \pm 2\sqrt{-1}$.

Solve the following, having given the roots indicated:

2. $2x^3-11x^2+8x+7=0;\ 3+\sqrt{2}$.
3. $2x^3-11x^2+16x+11=0;\ 3-\sqrt{-2}$.
4. $x^4-2x^3-x^2+6x-3=0;\ \frac{1}{2}(3+\sqrt{-3})$.
5. $x^4+3x^3+5x^2+4x+2=0;\ -\frac{1}{2}(1+\sqrt{-3})$.
6. $2x^5-x^4+4x^3-2x^2+2x-1=0;\ \sqrt{-1},\ \sqrt{-1}$.

TRANSFORMATION OF EQUATIONS

670. Frequently by transforming an equation its solution may be made to depend upon that of an equation that is easier to solve.

For example, it is easier to substitute positive integral values of the unknown number than negative or fractional values.

Hence, to find the negative roots of $f(x)=0$ by trial, first transform to an equation whose roots are numerically equal to the roots of $f(x)=0$ but opposite in sign, and then search for the positive roots of the transformed equation.

671. To change the signs of the roots.

Given $$f(x)=x^n+px^{n-1}+qx^{n-2}+\cdots+sx+t=0. \qquad (1)$$

Put $-y$ for x. Then, the terms of (1) involving *odd* powers will have their signs changed and

$$y^n-py^{n-1}+qy^{n-2}-\cdots-sy+t=0 \qquad (2)$$

or
$$-y^n+py^{n-1}-qy^{n-2}+\cdots-sy+t=0, \qquad (3)$$

according as n is even or odd. Changing all signs in (3),

$$y^n-py^{n-1}+qy^{n-2}-\cdots+sy-t=0. \qquad (4)$$

Since $-y = x$, $y = -x$ and the roots of (2) and (4) are those of (1) with their signs changed. (2) is obtained by changing the signs of odd powers and (4) by changing the signs of even powers.

PRINCIPLE 5. — *An equation in x may be transformed into another having the same roots with opposite signs by changing the signs of the terms involving either the odd or the even powers.*

To change the signs of the roots of $x^4 + x^3 + 2x + 3 = 0$ and of $x^5 + 2x^3 + 4x^2 + x + 5 = 0$, and leave the highest power positive, change the signs of *odd* powers in the first instance and of *even* powers in the second. The transformed equations are, using y for the changed roots,

$$y^4 - y^3 - 2y + 3 = 0 \text{ and } y^5 + 2y^3 - 4y^2 + y - 5 = 0.$$

The absolute terms, 3 and 5, or $3x^0$ and $5x^0$, are regarded as even powers.

672. To multiply the roots by a constant.

Given $$f(x) = x^n + px^{n-1} + qx^{n-2} + \cdots + sx + t = 0, \qquad (1)$$

and m a constant by which each root is to be multiplied.

Let $$y = mx, \qquad (2)$$

whence, $x = \frac{y}{m}$. Substituting $\frac{y}{m}$ for x in (1) and multiplying both members of the resulting equation by m^n,

$$y^n + mpy^{n-1} + m^2qy^{n-2} + \cdots + m^{n-1}sy + m^nt = 0, \qquad (3)$$

whose roots by (2) are m times those of (1). Hence,

PRINCIPLE 6. — *An equation $f(x) = 0$ may be transformed into another whose roots are m times those of the given equation by multiplying the successive coefficients by $1, m, m^2, m^3, \cdots, m^n$, respectively.*

To multiply the roots of $x^3 - 6x^2 + 11x - 6 = 0$ by 2, the successive coefficients are multiplied by 1, 2, 4, 8, respectively, and y or some other letter is used for the unknown number in the transformed equation. Hence, the equation whose roots are twice those of the given equation is

$$y^3 - 12y^2 + 44y - 48 = 0.$$

673. The principal use of the preceding transformation is to clear equations of fractional coefficients and at the same time make the coefficient of the highest power of x unity.

If $x^2 - \frac{7}{2}x + 3 = 0$ is cleared of fractional coefficients without changing the roots $\frac{3}{2}$ and 2, the coefficient of x^2 in the resulting equation will not be 1. But multiplying the roots by 2, giving $y^2 - 7y + 12 = 0$, the equation is cleared of fractional coefficients and the coefficient of the highest power of the unknown number is still 1.

Examples

Transform the following equations to equations whose roots are *ten* times the roots of the given equations:

1. $x^3+2x^2+x-4=0$.
2. $x^3-3x^2-4x+12=0$.
3. $x^3-.9x^2+.23x-.015=0$.
4. $x^4-.18x^2+.032x-.0015=0$.

5. Transform $8x^4-12x^3+4x^2-10x-3=0$ to an equation with integral coefficients, the leading coefficient being 1.

Solution

Dividing by 8, $x^4-\frac{3}{2}x^3+\frac{1}{2}x^2-\frac{5}{4}x-\frac{3}{8}=0$.

Multiplying the roots by m, Prin. 6,

$$y^4-\frac{3m}{2}y^3+\frac{m^2}{2}y^2-\frac{5m^3}{4}y-\frac{3m^4}{8}=0,$$

whose coefficients are evidently integral when $m=2$.

Substituting 2 for m, $y^4-3y^3+2y^2-10y-6=0$,

an equation whose roots are double those of the given equation.

Transform the following equations to the reduced form $f(x)=0$ having integral coefficients:

6. $4x^4+3x^2-2x+9=0$.
7. $16x^3-12x^2+10x-7=0$.
8. $2x^3-1\frac{4}{3}x^2+1\frac{1}{6}x-2\frac{5}{12}=0$.
9. $x^3-\frac{1}{2}x^2+\frac{5}{12}x-\frac{7}{54}=0$.
10. $(x-1)^3(3x-1)^2=50$.
11. $5x^4+.1x^2+.125x+.2=0$.

12. On page 299 it is shown that the three cube roots of 1 are $1, \frac{1}{2}(-1\pm\sqrt{-3})$. Prove by Prin. 6 that the three cube roots of a^3 are $a, \frac{1}{2}a(-1\pm\sqrt{-3})$.

Find the three cube roots of 8, 27, -8, and -1.

674. To decrease the roots by a given number.

Given $f(x)=x^n+px^{n-1}+qx^{n-2}+\cdots+sx+t=0$, (1)

and let it be required to find an equation of the same form whose roots are h less.

First Method. Let $y=x-h$, whence $x=y+h$.

Substituting $(y+h)$ for x in (1),

$$(y+h)^n+p(y+h)^{n-1}+q(y+h)^{n-2}+\cdots+s(y+h)+t=0. \quad (2)$$

Since $y=x-h$, (2) is the required transformed equation before reduction to the same form as (1).

Expanding the powers of $(y+h)$ in (2) and arranging the result in descending powers of y,

$$\left.\begin{array}{l|l|l} y^n + nh & y^{n-1} + \dfrac{n(n-1)}{2}h^2 & y^{n-2} + \cdots + h^n \\ + p & + (n-1)ph & + \cdots + ph^{n-1} \\ & + q & + \cdots + qh^{n-2} \\ & & + \cdots\cdots\cdots \\ & & + sh \\ & & + t \end{array}\right\} = 0, \qquad (3)$$

which is the reduced form of the transformed equation.

Second Method. Except when n is small the expansion of the powers of $(y+h)$ is laborious. To discover an easier method of finding the coefficients of y^{n-1}, y^{n-2}, $\cdots$ in the transformed equation (3), represent these coefficients by P, Q, $\cdots$.

Then, $$y^n + Py^{n-1} + Qy^{n-2} + \cdots + Sy + T = 0 \qquad (4)$$

is an equation obtained from (1) by substituting $y+h$ for x, or y for $x-h$. Therefore, if $x-h$ is substituted for y in (4), the first member of the resulting equation must be identically equal to the first member of (1); that is,

$$\begin{aligned} x^n + px^{n-1} + qx^{n-2} + \cdots + sx + t = (x-h)^n + P(x-h)^{n-1} \\ + Q(x-h)^{n-2} + \cdots + S(x-h) + T \end{aligned} \qquad (5)$$

is an *identical equation.*

From the form to which we have reduced $f(x)$ in the second member of (5), it is evident that T, the last coefficient of the transformed equation, is the remainder when $f(x)$ is divided by $x-h$; S, the preceding coefficient, is the remainder when the quotient is divided by $x-h$; etc.

Hence, to transform an equation of the nth degree in x into another whose roots are h less,

Rule. — *Substitute $y+h$ for x in the given equation and reduce the resulting equation.*

Or, divide $f(x)$ by $x-h$ until the remainder does not involve x, divide the quotient by $x-h$ until the remainder does not involve x, and so continue to n divisions. The first coefficient of the given equation together with the successive remainders taken in the reverse order will be the coefficients of the transformed equation.

Examples

1. Decrease the roots of $2x^3 - 19x^2 + 59x - 60 = 0$ by 2.

First Solution. — Let $x - 2 = y$. Then, $x = y + 2$. Substituting,

$$2(y+2)^3 - 19(y+2)^2 + 59(y+2) - 60 = 0. \quad (1)$$

Reducing,
$$2y^3 - 7y^2 + 7y - 2 = 0. \quad (2)$$

Second Solution. — Dividing $2x^3 - 19x^2 + 59x - 60$ by $x - 2$ as in the following process, the quotient is $2x^2 - 15x + 29$ and the remainder is -2.

Dividing $2x^2 - 15x + 29$ by $x - 2$, the quotient is $2x - 11$ and the remainder is 7.

Dividing $2x - 11$ by $x - 2$, the quotient is 2 and the remainder is -7.

Dividing 2 by $x - 2$, there is no quotient, and 2 itself is the remainder.

2	−19	59	−60	2
	4	−30	58	
2	−15	29	−2	
	4	−22		
2	−11	7		
	4			
2	−7			

Hence, the transformed equation is $2y^3 - 7y^2 + 7y - 2$.

In practice the first detached coefficient is written but once.

Transform the following to equations whose roots are 3 less:

2. $x^3 - 12x^2 + 47x - 60 = 0$. Prove by solving both equations.

3. $x^4 - 4x^3 - 19x^2 + 46x + 120 = 0$.

4. $3x^4 - 19x^3 + 21x^2 + 31x + 12 = 0$.

5. $x^4 - 2.75x^2 + .5x + 4.5 = 0$.

675. To increase the roots by a given number.

Since increasing the roots of an equation by h may be regarded as decreasing them by $-h$, the rule for increasing the roots by h is the same as that given for decreasing the roots by h, except that $y+h$ and $x+h$ take the place of $y-h$ and $x-h$, respectively.

Examples

Transform the following to equations whose roots are 5 greater:

1. $x^4 + 9x^3 + 29x^2 + 39x + 18 = 0$.

2. $x^3 + 20x^2 + 131x + 280 = 0.$

3. $x^4 + 6x^3 + 10x^2 + 9x + 4 = 0.$

4. $x^3 + 15x^2 + 71x + 105 = 0.$

676. To remove any assigned term except the first.

It is often desirable to transform an equation into another lacking a certain term. This is done by decreasing the roots by such a number h that the coefficient of the assigned term in the transformed equation shall be zero.

Referring to the formula for the equation whose roots are h less than those of the given equation, § 674, (3), it is seen that the second term is lacking when $nh + p = 0$, that is, when $h = -\frac{p}{n}$; that the third term is lacking when h has such a value that

$$\frac{n(n-1)}{2}h^2 + (n-1)ph + q = 0; \text{ etc.}$$

EXAMPLES

1. Transform $x^3 + 6x^2 + 5x - 12 = 0$ to an equation lacking the second power of the unknown number.

SOLUTION. — In this equation $p = 6$ and $n = 3$. Therefore, the value of h that makes $nh + p = 0$ is -2; that is, the roots of the given equation should be decreased by -2.

1	6	5	−12	−2
	−2	−8	6	
	4	−3	−6	
	−2	−4		
	2	−7		
	−2			
	0			

Hence, the transformed equation is

$$y^3 + 0y^2 - 7y - 6 = 0, \text{ or } y^3 - 7y - 6 = 0.$$

2. Change $2x^3 - 5x^2 - x + 4 = 0$ to the form $x^3 + ax + b = 0$ with integral coefficients.

SOLUTION. — The reduced form is $x^3 - \frac{5}{2}x^2 - \frac{1}{2}x + 2 = 0.$ (1)

Since $h = -\frac{p}{n} = \frac{5}{6}$, we first multiply the roots by 6 in order that h may be an integer.

When $y = 6x$, (1) becomes $y^3 - 15y^2 - 18y + 432 = 0.$ (2)

In (2), $p = -15$ and $n = 3$. $\therefore h = 5.$

Decreasing the roots of (2) by 5 as in Ex. 1,

when $z = y - 5$, $\qquad z^3 - 93z + 92 = 0.$ (3)

Since $y = 6x$ and $z = y - 5$, $z = 6x - 5$; that is, each root of (3) is 5 less than 6 times the corresponding root of (1).

Change to the form $x^3 + ax + b = 0$ with integral coefficients, and express the roots of the transformed equation in terms of those of the given equation:

3. $x^3 - 12x^2 + 43x - 40 = 0$.
4. $x^3 - 3x^2 - 88x - 240 = 0$.
5. $x^3 + 15x^2 + 68x + 96 = 0$.
6. $x^3 + x^2 - 2 = 0$.
7. $x^3 + x^2 + x + 2 = 0$.
8. $2x^3 - x^2 - 2x + 1 = 0$.

9. Transform $x^4 + 4x^3 - 7x^2 - 22x + 24 = 0$ into an equation lacking the third power of the unknown number. Solve.

677. To change the roots to their reciprocals.

Given $f(x) = x^n + px^{n-1} + qx^{n-2} + \cdots + rx^2 + sx + t = 0.$ (1)

Let $\frac{1}{x} = y$. Then, $x = \frac{1}{y}$. Substituting this value for x,

$$\frac{1}{y^n} + \frac{p}{y^{n-1}} + \frac{q}{y^{n-2}} + \cdots + \frac{r}{y^2} + \frac{s}{y} + t = 0.$$

Clearing of fractions and arranging in descending powers of y,

$$ty^n + sy^{n-1} + ry^{n-2} + \cdots + qy^2 + py + 1 = 0. \qquad (2)$$

Equation (2) is therefore the equation whose roots are the reciprocals of the roots of (1). The transformed equation evidently has the same coefficients as the given equation, but in the *reverse order*.

DESCARTES' RULE OF SIGNS

678. In any series of algebraic numbers, every sequence of two unlike signs is called a **Variation** of sign and every sequence of two like signs is called a **Permanence** of sign.

In $x^5 - 2x^4 + x^3 + 3x^2 - 5x - 4$ there are three variations, $+ -$, $- +$, $+ -$, and two permanences, $+ +$, $- -$. In $x^5 + 3x^2 - 5x - 4$, one variation and two permanences occur.

679. Let the signs of the first member of an equation in x be

$$+\ 0\ -\ -\ +\ +\ +\ 0\ +\ -\ +\ +,$$

in which 0 represents the coefficient of each missing term.

Multiply by $x - a$ and so introduce a *positive* root.

$$\begin{array}{l} +\ 0\ -\ -\ +\ +\ +\ 0\ +\ -\ +\ + \\ +\ - \\ \hline +\ 0\ -\ -\ +\ +\ +\ 0\ +\ -\ +\ + \\ \quad -\ 0\ +\ +\ -\ -\ -\ 0\ -\ +\ -\ - \\ \hline +\ -\ -\ \pm\ +\ \pm\ \pm\ -\ +\ -\ +\ \pm\ - \end{array}$$

Since the multiplicand has unlike signs, to each sign of the multiplicand immediately following a like sign there corresponds an ambiguous sign in the product. It will be observed, also, that each ambiguous sign or set of ambiguous signs in the product stands between two unlike signs, only *interrupting* a variation.

Therefore, if the ambiguous signs of the product and the corresponding signs of the multiplicand are stricken out, the number of variations will be unchanged in the multiplicand, and unchanged or diminished in the product.

Hence, the *least* possible number of variations added by introducing the positive root a is found by comparing the remaining signs of the multiplicand and product.

$$\begin{array}{l} +\ 0\ -\ +\ 0\ +\ -\ + \\ +\ -\ -\ +\ -\ +\ -\ +\ - \end{array}$$

It is evident that each variation in the multiplicand corresponds to at least one variation in the product, and that the product has in addition one variation at the end, arising from multiplying the last term of the multiplicand by x and then by $-a$.

Hence, *each introduction of a positive root adds at least one variation of sign.*

Let $F(x)$ be the product of all the factors corresponding to the negative and imaginary roots of $f(x) = 0$, and let a, b, $\cdots$ be the positive roots.

Since the introduction of each positive root, when $F(x)$ is multiplied by $(x - a)$, $(x - b)$, $\cdots$, causes an increase of at least one in the number of variations of sign, in an equation $f(x) = 0$, the number of positive roots may be equal to or less than the number of variations, but cannot be greater than this number.

Again, since $f(-x)=0$ has the roots of $f(x)=0$ with their signs changed, the negative roots of $f(x)=0$ correspond to the positive roots of $f(-x)=0$. Therefore, the number of negative roots of $f(x)=0$ may be equal to, or less than, the number of variations of sign in $f(-x)=0$, but cannot be greater than this number. Hence,

An equation $f(x)=0$ cannot have more positive roots than there are variations of sign in $f(x)$, nor more negative roots than there are variations of sign in $f(-x)$.

This is *Descartes' rule of signs.*

NOTE. — In applying Descartes' rule it will be understood that all zero roots have been removed. Also x^0, the power of x involved in the absolute term, will be regarded as an even power of x.

680. The following may be deduced directly from Descartes' rule:

1. *If the signs of all the terms of $f(x)$ are positive, the equation $f(x)=0$ has no positive roots.*

2. *If all the terms of $f(x)$ that involve even powers of x have the same sign and all that involve odd powers of x have the opposite sign, the equation $f(x)=0$ has no negative roots.*

3. *If the equation $f(x)=0$ is complete, it cannot have more negative roots than there are permanences of sign in $f(x)$.*

The equation $x^6+x^4+x^3+5x+4=0$ has no positive roots, for there are no variations of sign in its first member.

The equation $x^6+x^4-x^3-5x+4=0$ has no negative roots, for there are no variations of sign in $f(-x)$, or in $x^6+x^4+x^3+5x+4$.

The equation $x^4+2x^3-3x^2-2x+2=0$ cannot have more than 2 negative roots, which is the number of permanences in $f(x)$; for since the equation is *complete*, each permanence of sign in $+\ +\ -\ -\ +$, the signs of $f(x)$, corresponds to a variation of sign in $+\ -\ -\ +\ +$, the signs of $f(-x)$.

681. Existence of imaginary roots.

It is often possible to detect the existence of imaginary roots by applying Descartes' rule. For, first removing zero roots, if any, if the sum of the greatest possible number of positive roots and the greatest possible number of negative roots, computed by Descartes' rule, is less than the whole number of roots, the number of roots remaining must be the least possible number of imaginary roots.

Thus, $x^4 + 2x - 1 = 0$ cannot have more than one positive root nor more than one negative root. But the whole number of roots is four. Hence, there are at least two imaginary roots.

EXAMPLES

Find the nature of the roots of the following:

1. $x^4+4x^3+6x^2+5x+2=0$.
2. $x^4-3x^3-x+3=0$.
3. $x^4-10x^2-20x-16=0$.
4. $x^6+x^4+x^2+x=0$.
5. $x^4-4x^3+27=0$.
6. $x^3-3x-2=0$.
7. $x^5-1=0$.
8. $x^5+1=0$.

9. If the terms of $f(x)$ are all positive and each involves an even power of x, show that the roots of the equation $f(x)=0$ are all imaginary.

10. Show that $x^n-1=0$ has two real roots when n is even, one positive and one negative, but only one real root, which is positive, when n is odd.

MULTIPLE ROOTS

682. If an equation has two roots each equal to a, a is called a *double root* of the equation; if an equation has three roots each equal to a, a is called a *triple root* of the equation; in general, if an equation has m roots each equal to a, a is called a **Multiple Root** whose order of multiplicity is m.

683. Let $$f(x)=(x-a)^m F(x)=0 \tag{1}$$ be an equation having m roots each equal to a.

Then, § 642,

$$\begin{aligned} f'(x) &= \frac{d}{dx}(x-a)^m F(x)+(x-a)^m \frac{d}{dx}F(x) \\ &= m(x-a)^{m-1}F(x)+(x-a)^m F'(x) \\ &= (x-a)^{m-1}[mF(x)+(x-a)F'(x)]. \end{aligned} \tag{2}$$

By (2), $f'(x)=0$ has $(m-1)$ roots each equal to a. Hence,

PRINCIPLE 7. — *If a occurs m times as a root of an equation $f(x)=0$, it occurs $(m-1)$ times as a root of the first derived equation $f'(x)=0$.*

Thus, $x^4-6x^2+8x-3=0$, or $(x-1)^3(x+3)=0$, has the root 1 occurring three times, and the derived equation $4x^3-12x+8=0$, or $4(x-1)^2(x+2)=0$, has this root occurring twice.

684. Let $\phi(x)$ denote the H. C. D. of $f(x)$ and $f'(x)$.

If $f(x)=0$ has no multiple roots, $\phi(x)=1$; but if $f(x)=0$ has multiple roots corresponding to the factors $(x-a)^m$, $(x-b)^q$, $\cdots$, then, Prin. 7, $\phi(x)=(x-a)^{m-1}(x-b)^{q-1}\cdots$.

Hence, if $\phi(x)=0$ can be solved, the multiple roots of $f(x)=0$ may be found and removed.

EXAMPLES

1. Solve $x^7-4x^6+5x^5-6x^4+32x^2-16x-32=0$.

SOLUTION. — Let $f(x)=x^7-4x^6+5x^5-6x^4+32x^2-16x-32$.

Then, $f'(x)=7x^6-24x^5+25x^4-24x^3+64x-16$.

The H. C. D. of $f(x)$ and $f'(x)$ is found to be $\phi(x)=x^3-3x^2+4$.

Put $x^3-3x^2+4=0$.

Solving by trial, the roots of $\phi(x)=0$ are $x=-1, 2, 2$.

Therefore, -1 is a root of $f'(x)=0$ and 2 is a double root of $f'(x)=0$.

Hence, Prin. 7, -1 is a double root and 2 is a triple root of $f(x)=0$.

Removing the corresponding factors $(x+1)^2(x-2)^3$ from $f(x)$, the given equation is depressed to the quadratic equation $x^2+4=0$, whose roots are $2\sqrt{-1}$ and $-2\sqrt{-1}$. Hence, the roots of the given equation are -1, -1, 2, 2, 2, $2\sqrt{-1}$, $-2\sqrt{-1}$.

Solve the following equations:

2. $x^4-x^3-3x^2+5x-2=0$.
3. $x^5+6x^4+14x^3+20x^2+24x+16=0$.
4. $x^5-7x^4+14x^3-2x^2-15x+9=0$.

LOCATION OF REAL ROOTS

685. Let $f(x)=x^3+3x^2-11x-5$. Since, § 641, $f(x)$ is continuous, if two numbers substituted for x give results with opposite signs, $f(x)$ passes through zero and its graph crosses the X-axis once or an odd number of times; but if they give results with the same sign, the graph does not cross the X-axis during the interval or else crosses it an even number of times.

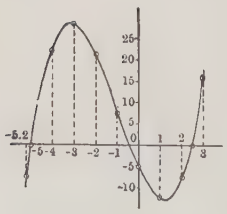

For example, the given graph does not cross the X-axis between -4 and -1, but crosses it once

between -1 and 0, twice between -1 and 3, and three times between -5.2 and 3.

But each intersection gives a root of $f(x) = 0$. Hence,

PRINCIPLE 8. — *If two real numbers substituted for x in the first member of the general equation $f(x) = 0$ give results with opposite signs, an odd number of real roots of the equation lie between the numbers; but if they give results with the same sign, no roots or an even number of roots lie between the numbers.*

COROLLARY 1. — *An equation of an odd degree has at least one real root of a sign opposite to that of its absolute term.*

For, if $x = -\infty$, $f(x)$ is negative; if $x = 0$, $f(x)$ has the sign of the absolute term; if $x = +\infty$, $f(x)$ is positive. Hence, if the absolute term is positive, $f(x)$ changes sign for some value of x between $-\infty$ and 0; but if the absolute term is negative, $f(x)$ changes sign for some value of x between 0 and $+\infty$.

COROLLARY 2. — *An equation of an even degree whose absolute term is negative has at least two real roots, one positive and one negative.*

For, if $x = -\infty$, $f(x)$ is positive; if $x = 0$, $f(x)$ is negative; if $x = +\infty$, $f(x)$ is positive. Hence, $f(x)$ changes sign for some value of x between $-\infty$ and 0, and again for some value of x between 0 and $+\infty$.

COROLLARY 3. — *Every equation whose absolute term is negative has at least one real root.*

686. Limits of the real roots.

687. If no positive real root of an equation can be greater than a, then a is a **Superior Limit** of the positive real roots; and if no negative real root can be less than $-b$, then $-b$ is an **Inferior Limit** of the negative real roots.

688. Let $f(x) = x^n + px^{n-1} + qx^{n-2} + \cdots + sx + t = 0$ (1)

be an equation having one or more of its roots positive. Then, by Descartes' rule, some of the terms of $f(x)$ must be negative.

To find a superior limit to the *positive* roots, let r denote the number of positive terms preceding the first negative term, missing terms, if any, being counted; and let $-N$ be the negative coefficient of greatest absolute value.

For positive values of x, the sum of the terms beginning with

the second and ending with the rth is positive, or if all are missing, zero. Hence, dropping these terms will not increase $f(x)$. Again, making $-N$ the coefficient of each term after the rth will not increase $f(x)$.

Therefore, every positive value of x that makes

$$x^n - N(x^{n-r} + x^{n-r-1} + \cdots + x + 1)$$

positive makes $f(x)$ positive, $f(x)$ having the same or a greater value.

$$x^n - N(x^{n-r} + x^{n-r-1} + \cdots + x + 1) = x^n - \frac{N(x^{n-r+1} - 1)}{x - 1},$$

when $x > 1$,

$$> x^n - \frac{Nx^{n-r+1}}{x - 1}.$$

Hence, when $x > 1$, $f(x)$ is positive if

$$x^n - \frac{Nx^{n-r+1}}{x - 1} = 0 \text{ or is positive;}$$

that is, if $x^n(x-1) - Nx^{n-r+1} = 0$ or is positive;

that is, if $x^{r-1}(x-1) - N = 0$ or is positive.

But when $x > 1$, $x^{r-1} > (x-1)^{r-1}$ and $x^{r-1}(x-1) > (x-1)^r$.

$$\therefore\ x^{r-1}(x-1) - N > (x-1)^r - N.$$

Hence, when $x > 1$, $f(x)$ is positive if

$$(x-1)^r - N = 0 \text{ or is positive;}$$

that is, if $(x-1)^r$ is equal to or greater than N; that is, if x is equal to or greater than $\sqrt[r]{N} + 1$.

Hence, for all values of x equal to or greater than $\sqrt[r]{N}+1$, $f(x)$ is positive.

Since $f(x) > 0$ for all values of x equal to or greater than $\sqrt[r]{N} + 1$, no real root of $f(x) = 0$ can equal or exceed $\sqrt[r]{N} + 1$; that is, $\sqrt[r]{N} + 1$ *is a superior limit of the positive real roots of* $f(x) = 0$.

Thus, in $x^4 + x^3 - 7x^2 - 13x - 6 = 0$, $r = 2$, and $N = 13$. Therefore, $\sqrt{13} + 1$, or $4.6+$, is a superior limit to the positive roots.

When the superior limit found is not an integer, it is usually convenient to take the next higher integer for a superior limit. For example, in the illustration just given 5 may be taken for a superior limit.

689. To find an inferior limit to the negative roots of an equation, change the signs of all the roots by Prin. 5, and find a superior limit to the positive roots of the transformed equation. This

number with its sign changed will be an inferior limit to the negative roots of the given equation.

EXAMPLES

Find the integral limits to the real roots of

1. $x^4 + x^3 + 7x^2 - 8x - 3 = 0$.
2. $x^5 - 3x^3 - 6x^2 - 14x - 8 = 0$.
3. $x^6 - 28x^3 - 49x^2 + 112x + 132 = 0$.
4. $x^6 + x^3 - 4x^2 + 6x - 20 = 0$.
5. $x^7 - x^5 + 3x^4 + 76x^3 - 243x^2 + 108 = 0$.

690. The utility of the preceding principles and their failure in certain cases may be illustrated in the solution of such an equation as $x^4 - x^3 - 4x^2 + 3x + 3 = 0$.

Since no factor of the absolute term satisfies the equation, Prin. 1, Cor. 2, the equation has no integral root. Also, Prin. 3, the equation has no rational fraction for a root. Hence, the equation has no commensurable root.

If the equation has a positive root, removing it would leave a depressed equation of an odd degree with a negative absolute term. Since, Prin. 8, Cor. 1, such an equation has a positive root, if the given equation has one positive root, it has two. Similarly, if the given equation has one negative root, it has two. But we cannot tell, without actual trial, whether the number of positive roots or of negative roots is zero or two.

By § 688, if the equation has real roots, their superior limit is 5, and their inferior limit is -3.

Substituting $-2,\ -1,\ 0,\ 1,\ 2,\ 3,\ 4$, for x,

we obtain $5,\ -2,\ 3,\ 2,\ 1,\ 30,\ 143$, for $f(x)$.

By Prin. 8, then, a negative root lies between -2 and -1, and another between -1 and 0. But without considerable labor in substituting values between 0 and 4, it cannot be determined whether the other two roots are positive or imaginary.

When two roots of an equation are *nearly equal* or when there are imaginary roots, the real roots are not found readily by trial. In such cases the number of real and imaginary roots and the situation of the real roots may be completely determined by Sturm's theorem, which follows.

691. Sturm's theorem.

Let $f(x) = 0$ be an equation in x freed of multiple roots.

Then, $f(x)$ and $f'(x)$ have no common factor involving x.

Divide $f(x)$ by $f'(x)$, as in the process of finding the H.C.D., until the remainder is of lower degree than the divisor, introducing or rejecting *positive* monomial factors, if desired, *but not negative ones.* Denote the remainder *with its sign changed* by $F_2(x)$. Similarly, divide $f'(x)$ by $F_2(x)$ and denote the remainder *with its sign changed* by $F_3(x)$. Continuing in this way, since $f(x)$ and $f'(x)$ have no common factor involving x, a remainder not involving x will finally be obtained. Denote this remainder *with its sign changed* by $F_n(x)$. Then, $f(x)$, $f'(x)$, $F_2(x)$, $F_3(x)$, $\cdots$, $F_{n-1}(x)$, $F_n(x)$ are called **Sturm's functions.**

Thus, let $f(x) = x^3 + x^2 - 2x - 8$, whence $f'(x) = 3x^2 + 2x - 2$.

$$
\begin{array}{r|l|l|l}
 & 3+2-2 & 1+1-2-8 & \\
 & & 3 & \\
 & & \hline 3+3-6-24 & 1 \\
 & & 3+2-2 & \\
 & & \hline 1-4-24 & \\
 & & 3 & \\
 & & \hline 3-12-72 & 1 \\
 & & 3+2-2 & \\
 & & \hline +14)-14-70 & \\
 & & -1-5 & \\
3 & 3+15 & 1+5 & \therefore\ F_2(x) = x+5. \\
 & \underline{-13-2} & & \\
-13 & -13-65 & & \\
 & \underline{+63} & & \therefore\ F_3(x) = -63.
\end{array}
$$

Hence, Sturm's functions are $x^3 + x^2 - 2x - 8$, $3x^2 + 2x - 2$, $x + 5$, -63.

Sturm's theorem may be stated as follows:

If a and b are two real numbers, b greater than a, then the number of variations of sign obtained by writing $f(a)$, $f'(a)$, $F_2(a)$, $\cdots$, $F_n(a)$ in order, less the number of variations obtained by writing $f(b)$, $f'(b)$, $F_2(b)$, $\cdots$, $F_n(b)$ in order, is equal to the number of real roots of $f(x) = 0$ that lie between a and b.

The proof is as follows:

1. Since $f(x)$ and $f'(x)$ have no common factors, by § 148 no two *successive* functions have a common factor; that is, *no two successive functions become zero for the same value of x.*

Let $F_r(x)$ be any of Sturm's functions except $f(x)$ and $F_n(x)$.

By the definition of Sturm's functions, if $F_{r-1}(x)$ is divided by $F_r(x)$, the remainder is $-F_{r+1}(x)$. Represent the quotient by Q

Then, § 102, $F_{r-1}(x) = QF_r(x) - F_{r+1}(x)$

if $F_r(x) = 0$, $= -F_{r+1}(x)$;

that is, *if any intermediate function becomes zero for any value of x, the adjacent functions have opposite signs for that value of x.*

Let c' be a root of $F_r(x) = 0$, so that $F_r(c') = 0$; and let $c' - h$ and $c' + h$ be so close to c' that no roots of the adjacent functions lie between $c' - h$ and $c' + h$.

Then, the adjacent functions have opposite signs for $x = c'$ and keep these signs while x increases from $c' - h$ to $c' + h$.

Since both before and after $x = c'$ the sign of $F_r(x)$ is like that of one of the adjacent functions and unlike that of the other, *when x is passing through a root of any intermediate function, Sturm's functions maintain the same number of variations.*

2. Let c be a root of $f(x) = 0$, so that $f(c) = 0$, and let h be a positive number, as small as we please.

Then, $f(c - h)$ denotes the value of $f(x)$ just before, and $f(c + h)$ denotes the value of $f(x)$ just after, x passes through the root c.

§ 640, $$f(c-h) = f(c) - hf'(c) + \frac{h^2}{\underline{2}} f''(c) - \cdots,$$

and $$f(c+h) = f(c) + hf'(c) + \frac{h^2}{\underline{2}} f''(c) + \cdots.$$

Since $f(c) = 0$, if h is taken sufficiently small the signs of $f(c - h)$ and $f(c + h)$ will be the same as those of their numerically greatest terms, $-hf'(c)$ and $hf'(c)$, respectively. Then, h being positive, $f(c - h)$ has the sign opposite to that of $f'(c)$, and $f(c + h)$ has the same sign as $f'(c)$.

That is, as x increases through a root of $f(x) = 0$, $f(x)$ changes from a number having the sign opposite to that of $f'(x)$ to a number having the same sign as $f'(x)$. Hence, as x *increases through a root of $f(x) = 0$, Sturm's functions lose one variation.*

Therefore, since, as x increases continuously from a to b, Sturm's functions lose one variation every time x passes through a root of $f(x) = 0$, but lose none when x passes through the roots of the other functions, *the number of variations lost between a and b indicates the number of real roots between a and b.*

692. Since all the negative roots of an equation lie between $-\infty$ and 0, if $-\infty$ is substituted for x in Sturm's functions and then 0 is substituted, the number of variations lost gives the number of negative roots of the equation.

Similarly, if 0 is substituted for x in Sturm's functions and then $+\infty$ is substituted, the number of variations lost gives the number of positive roots of the equation.

Examples

1. Locate the roots of $x^4 - x^3 - 4x^2 + 3x + 3 = 0$.

Solution. — In § 690 it was found that one negative root of this equation was situated between -2 and -1 and another between -1 and 0. The nature and situation of the other two roots are found as follows:

Let $\quad f(x) = x^4 - x^3 - 4x^2 + 3x + 3.$

Then, $\quad f'(x) = 4x^3 - 3x^2 - 8x + 3.$

Employing the process of finding the H.C.D. of $f(x)$ and $f'(x)$, taking care not to introduce or reject negative factors, it is discovered that $f(x)$ and $f'(x)$ have no common factor. Hence, $f(x) = 0$ has no multiple roots, and $f(x)$ and $f'(x)$ are the first two of Sturm's functions.

Representing the successive remainders with their signs changed by $F_2(x)$, $F_3(x)$, and $F_4(x)$, Sturm's functions are:

$$f(x) = x^4 - x^3 - 4x^2 + 3x + 3$$
$$f'(x) = 4x^3 - 3x^2 - 8x + 3$$
$$F_2(x) = 35x^2 - 28x - 51$$
$$F_3(x) = 11x - 18$$
$$F_4(x) = +$$

Substituting $-\infty$, 0, and $+\infty$ for x in these functions,

x	$f(x)$	$f'(x)$	$F_2(x)$	$F_3(x)$	$F_4(x)$	variations
$-\infty$	+	−	+	−	+	4
0	+	+	−	−	+	2
$+\infty$	+	+	+	+	+	0

Since two variations are lost between $-\infty$ and 0, by Sturm's theorem there are two negative roots, as before ascertained; and since two variations are lost between 0 and $+\infty$, the other two roots are real and positive.

By § 688, 5 is a superior limit of the positive roots.

Substitute in Sturm's functions 0, 1, 2, 3, ···, or as many of these numbers as may be necessary to lose two variations.

x	$f(x)$	$f'(x)$	$F_2(x)$	$F_3(x)$	$F_4(x)$	variations
0	+	+	−	−	+	2
1	+	−	−	−	+	2
2	+	+	+	+	+	0

It is discovered that two variations are lost between 1 and 2; therefore, there are two positive roots between 1 and 2.

Locate the real roots of the following equations and find the number of imaginary roots:

2. $2x^3 - 15x^2 + 32x - 21 = 0.$

3. $16x^3 - 4x^2 - 80x + 75 = 0.$

4. $x^4 - 2x^3 - 7x^2 + 10x + 10 = 0.$

5. $x^4 - x^2 - 10x - 4 = 0.$

693. Horner's method of solving numerical equations.

Commensurable roots expressed by two or more figures may be found exactly by Horner's method, and real *incommensurable roots* may be found to any degree of accuracy required.

1. Let it be required to find approximately the one positive real root of the equation

$$f(x) = x^3 + 3x^2 - 11x - 5 = 0. \tag{1}$$

Substituting 0, 1, 2, 3, ⋯ for x, the corresponding values of the first member are $f(0) = -5$, $f(1) = -12$, $f(2) = -7$, $f(3) = 16$, ⋯.

Since $f(x)$ is negative when $x = 2$ and positive when $x = 3$, the one positive root must lie between 2 and 3 (Prin. 8).

Transforming (1) to an equation whose roots are 2 less,

1	3	−11	−5	|2
	2	10	−2	
	5	−1	−7	
	2	14		
	7	13		
	2			
	9			

the first transformed equation is

$$y^3 + 9y^2 + 13y - 7 = 0. \tag{2}$$

Since $y = x - 2$ and x lies between 2 and 3, the corresponding value of y lies between 0 and 1. Try .5.

1	9	13	-7	.5
	.5	4.75	8.875	
	9.5	17.75	1.875	

Since $y^3 + 9y^2 + 13y - 7$ is equal to 1.875 when $y = .5$ and is equal to -7 when $y = 0$, the root of this equation must be less than .5. Trying .4, it is found that the function does not change sign. Hence, the root lies between .4 and .5.

Transforming (2) to an equation whose roots are .4 less,

1	9	13	-7	.4
	.4	3.76	6.704	
	9.4	16.76	$-$ .296	
	.4	3.92		
	9.8	20.68		
	.4			
	10.2			

the second transformed equation is

$$z^3 + 10.2z^2 + 20.68z - .296 = 0, \tag{3}$$

in which $z = y - .4 = (x - 2) - .4 = x - 2.4$.

Since the positive root of (2) lies between .4 and .5 and each root of (3) is .4 less than the corresponding root of (2), the positive root of (3) lies between 0 and .1. Since this value of z is a small fraction, in (3) the higher powers of z are small as compared with the first power. Hence, the positive root of (3) is very nearly the same as the root of

$$20.68z - .296 = 0, \text{ or } 20.68z = .296.$$

Therefore, $z = .01 +$, and the next figure of the root is 1.

Transforming (3) to an equation whose roots are .01 less,

1	10.2	20.68	$-$ .296	.01
	.01	.1021	.207821	
	10.21	20.7821	$-$ 088179	
	.01	.1022		
	10.22	20.8843		
	.01			
	10.23			

the third transformed equation is

$$v^3 + 10.23\,v^2 + 20.8843\,v - .088179 = 0, \qquad (4)$$

in which $v = z - .01 = x - 2.41$.

The next figure of the root is found by neglecting the higher powers of v in (4) and solving the equation

$$20.8843\,v - .088179 = 0,$$

which gives $v = .004+$. Hence, the root is $2.414+$.

The preceding transformations and the work of substituting .004 for v in (4) to test the last figure may be written in one process, as shown below. The coefficients of the successive transformed equations are in heavy-face type.

1	3	−11	−5	| 2.414
	2	10	−2	
	5	−1	−7	
	2	14	6.704	
	7	**13**	−.296	
	2	3.76	.207821	
y^3	**9**	16.76	−.088179	
	.4	3.92	.083700944	
	9.4	**20.68**	−.004478056	
	.4	.1021		
	9.8	20.7821		
	.4	.1022		
z^3	**10.2**	**20.8843**		
	.01	.040936		
	10.21	20.925236		
	.01			
	10.22			
	.01			
v^3	**10.23**			
	.004			
	10.234			

The broken lines mark the close of each transformation.

If more figures of the root are desired, the last transformation may be completed and the process continued to any number of

figures of the root by successive transformations in each of which the root is decreased by *the largest number that will not cause the absolute term to change sign.*

The solution of an equation $f(x) = 0$, as for example

$$x^3 + 3x^2 - 11x - 5 = 0, \tag{1}$$

whose positive root has just been found to three decimal places, is often facilitated by plotting the graph of $f(x)$.

Plotting corresponding values of x and $f(x)$ in (1), the graph given on page 582 is obtained. It shows that the equation has two negative roots, and a positive root lying between 2 and 3.

The steps in Horner's process of approximation to the positive root 2.414+ are illustrated graphically as follows:

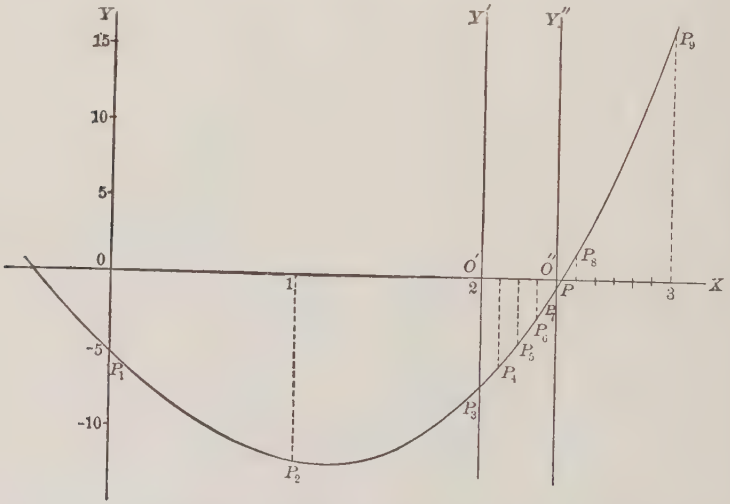

In the accompanying figure the positive root is represented graphically by the abscissa OP. Now if the Y-axis is moved parallel to itself 2 units toward the right to the position of $O'Y'$, the abscissa of every point in the graph, including that of P, will be decreased by 2. For example, the abscissa of P will become $O'P$.

Hence, *moving the Y-axis 2 units toward the right has the effect of decreasing the roots of the given equation by 2.*

The new axes, then, are $O'X$ and $O'Y'$, the new equation, that is, the *first transformed* equation is

$$y^3 + 9y^2 + 13y - 7 = 0, \tag{2}$$

in which $y = x - 2$, and the curved line $P_1P_2P_3 \cdots P_9$, called the graph of $x^3 + 3x^2 - 11x - 5$ with reference to the old axes, becomes the graph of $y^3 + 9y^2 + 13y - 7$ referred to the new axes.

Since $y = x - 2$, equation (2) has a root between 0 and 1. Accordingly, divide the portion of the X-axis between the second and third divisions into tenths and plot the points P_4, P_5, P_6, P_7, P_8, corresponding to $y = .1, .2, .3, .4, .5$, respectively. It is found that between .4 and .5 the ordinates change from negative to positive. Therefore, the graph crosses the X-axis between $y = .4$ and $y = .5$, that is, between $x = 2.4$ and $x = 2.5$.

Hence, the Y-axis may be moved .4 of a unit nearer to P than has been done, without causing the origin to pass beyond P. Making this transfer, then, the new axes are $O''X$ and $O''Y''$, and the second transformed equation is

$$z^3 + 10.2z^2 + 20.68z - .296 = 0, \tag{3}$$

in which $z = y - .4 = x - 2.4$.

Since $z = y - .4$, equation (3) has a root between 0 and .10.

Dividing the portion of the X-axis between the divisions 2.4 and 2.5 into ten equal parts, each .01 of a unit in length, it is found by substituting .01, .02, $\cdots$ for z in (3) that the first member changes sign between $z = .01$ and $z = .02$, that is, the graph crosses the X-axis between $x = 2.41$ and $x = 2.42$.

Hence, the Y-axis may be moved .01 of a unit nearer to P, without causing the origin to pass beyond P. This decreases the roots of (3) by .01 and gives the third transformed equation

$$v^3 + 10.23v^2 + 20.8843v - .088179 = 0, \tag{4}$$

in which $v = z - .01 = x - 2.41$.

This process of approximation can be continued indefinitely.

Graphically considered, then, Horner's method of approximation consists in moving the Y-axis toward the right, first, the greatest number of *units* possible without causing the origin to pass beyond the intersection of the graph and the X-axis, then the

greatest possible number of *tenths*, then the greatest possible number of *hundredths*, etc. The approximation to the root at any stage is the total distance the origin has been moved.

2. The process on page 591 illustrates the general method of extending a positive root to any number of figures after finding enough figures to separate it from other roots, if any, that are nearly equal to the root sought.

The following process illustrates certain modifications of Horner's method for roots that are *nearly equal*, as explained below. Let $x^4 - 12x^3 + 38x^2 + 8x - 112 = 0$.

1	-12	38	8	-112	|5.4
	5	-35	15	115	
	-7	3	23	**3**	
	5	-10	-35	-2.9824	
	-2	-7	**-12**	.0176	
	5	15	4.544		
	3	**8**	-7.456		
	5	3.36	5.952		
y^4	**8**	11.36	**-1.504**		
	.4	3.52			
	8.4	14.88			
	.4	3.68			
	8.8	**18.56**			
	.4				
	9.2				
	.4				
z^4	**9.6**				

Explanation. — By Sturm's theorem it is found that the equation has a negative root and three positive roots, one between 2 and 3, and two between 5 and 6. The above process is concerned with the roots between 5 and 6.

Decreasing the roots by 5, the first transformed equation is

$$y^4 + 8y^3 + 8y^2 - 12y + 3 = 0, \qquad (1)$$

which has only two positive roots, both between 0 and 1, the least positive root having been *passed*, that is, changed to a negative root. This is indicated by the change of sign of the absolute term from $-$ to $+$ and the loss of one variation of sign.

Since the first transformed equation has *two* roots between 0 and 1, the rule that the next figure of the root is the greatest number of tenths by

which the roots can be decreased without changing the sign of the absolute term is not sufficient to guard against passing the roots, for it is possible, by using too large a number, to pass both roots at the same time and still leave the absolute term positive in consequence of *two* changes in sign.

The roots may be separated, however, by applying the rule that the *equation* loses one variation of sign for each positive root that is passed when the roots are decreased by a number greater than the root in question.

If the roots of (1) are decreased by .4, as shown in the process, or by any less number of tenths, the absolute term remains positive, and besides, no variations are lost. Hence, both positive roots are *greater* than .4. But if the roots are decreased by .5 or by any greater number of tenths, two variations are lost. Hence, both positive roots are *less* than .5.

That is, both positive roots of (1) lie between .4 and .5, and the corresponding roots of the given equation lie between 5.4 and 5.5.

The second transformed equation

$$z^4 + 9.6\,z^3 + 18.56\,z^2 - 1.504\,z + .0176 = 0 \qquad (2)$$

has two roots between 0 and .10. Trying .01, .02, .03, ···, it is found that the absolute term changes sign and one variation is lost in passing from .01 to .02, and again in passing from .06 to .07. Hence, the roots of (2) are .01+ and .06+, and the corresponding roots of the given equation are 5.41+ and 5.46+.

The roots are now separated and the above process may be continued to find either of them by the easier method given in 1.

In finding the less root 5.414 +, the absolute terms will continue to be positive; in finding the greater root 5.464 +, they will be negative beginning with the third transformed equation.

Rule for Positive Roots. — *Find the first figure of the root by trial or by Sturm's theorem, and decrease the roots by this number.*

If the root is separated from other roots, find each succeeding figure of the root by decreasing the roots by the greatest number of the next lower order that will not cause the absolute term to change sign.

If the root is not separated from other roots, first separate the roots by Sturm's theorem; or decrease the roots by the greatest number of the next lower order that will not cause the equation to lose more variations than there are positive roots that are less than the root sought.

After several figures of the root have been found, the next figure may be found usually by neglecting powers of the unknown number higher than the first and solving the resulting simple equation; or, if the coefficient of the first power is small in comparison with the coefficients of the higher powers or is equal to zero, by neglecting the powers higher than the second and solving the resulting quadratic equation.

694. To avoid decimals and to abbreviate the work when many figures of the root are required, Horner's process is modified as explained below. Compare with the process on page 591.

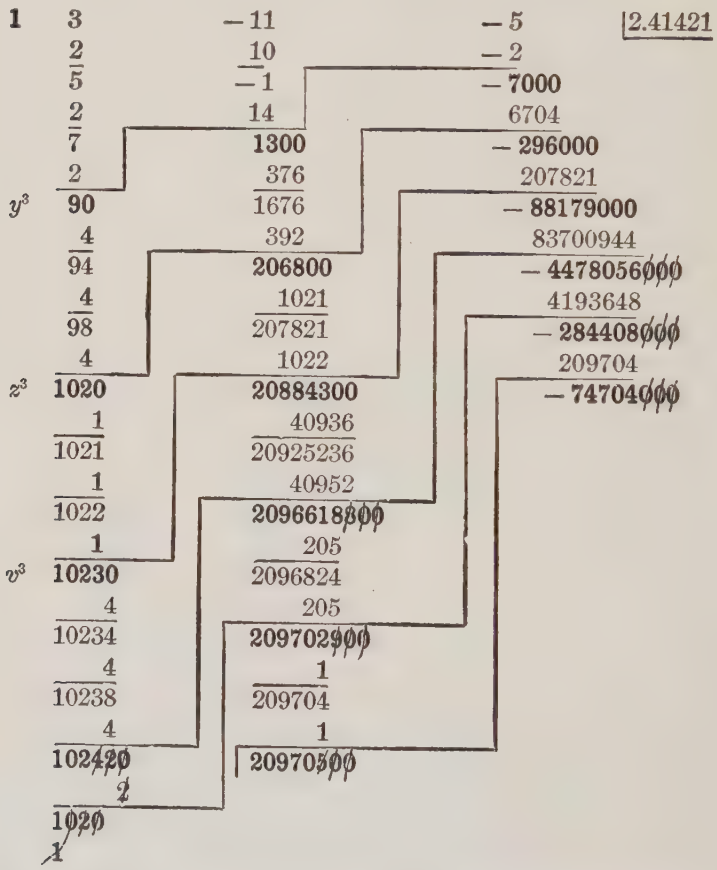

Explanation. — 1. Decimals are avoided by multiplying the roots of each transformed equation by 10, the numbers substituted for y, z, v, ··· being regarded as 4, 1, 4, ··· instead of .4, .01, .004, ···.

2. After several figures of the root have been obtained (in this case beginning with the fourth transformed equation), nearly as many more are accurately found by a contracted process. For since dividing both members of an equation by the same known number does not change the roots,

after the roots of the fourth transformed equation have been multiplied by 10, we may divide each coefficient by 1000; and if the decimal parts thus formed are cut off, the accuracy of the root will not be affected for several figures. Some allowance for the decimal cut off is made, when convenient. Thus, 102.420×2 is nearer 205 than 204 and is taken as 205.

In practice the two operations of multiplying the roots by 10 and dividing the equation by 1000 are performed simultaneously by omitting to annex the ciphers and then cutting off the last figure of the coefficient of the first power, the last two figures of the coefficient of the second power, and so on. In the above process this practically destroys the leading coefficient and reduces the equation to the *quadratic* $102\,w^2 + 2096619\,w - 4478056 = 0$, next to the quadratic $u^2 + 209703\,u - 284408 = 0$, and finally to the *simple equation*

$$20970\,t - 74704 = 0.$$

Solving this equation by dividing 74704 by 20970, $t = 3.562+$.

Hence, the root of the given equation is $2.414213562+$.

695. To find the value of a negative root, Horner's method may be applied to find the corresponding positive root of that transformed equation whose roots are numerically equal to the roots of the given equation, but opposite in sign. The resulting positive root with its sign changed will be the required negative root.

696. Horner's method may be used to find the principal nth root of any number. For example, the principal fifth root of 2 may be found by solving the equation $x^5 - 2 = 0$ by Horner's method.

Examples

1. Find by Horner's method the root lying between 1 and 2 of the equation $4x^3 - 3x^2 + x - 14 = 0$. Test the result by multiplying the roots by 4 and substituting 4 times the root found. Find the imaginary roots.

2. The equation $8x^3 - 29x^2 + 29x - 21 = 0$ has a root between 2 and 3. Find all the roots.

3. The number and situation of the real roots of the equation $x^4 - x^3 - 4x^2 + 3x + 3 = 0$ have been discussed in example 1, page 588. Find all the roots to the third decimal place.

4. Find all the roots of $x^4 - 6x^3 + 5x^2 + 14x - 4 = 0$ to the nearest third decimal place.

5. Find the fifth root of 330383.69407 by Horner's method.

697. Newton's method of approximation.

If one and only one real root of the equation

$$f(x) = x^n + px^{n-1} + qx^{n-2} + \cdots + sx + t = 0 \qquad (1)$$

lies between a and b, and if a is less than this root by a number h that is small in comparison with a, then $a + h$ is the root, and in

$$(a+h)^n + p(a+h)^{n-1} + q(a+h)^{n-2} + \cdots + s(a+h) + t = 0 \qquad (2)$$

the terms involving h^2, h^3, h^4, $\cdots$ may be neglected.

Then, approximately,

$$\begin{aligned} &a^n + pa^{n-1} + qa^{n-2} + \cdots + sa + t \\ &+ [na^{n-1} + p(n-1)a^{n-2} + q(n-2)a^{n-3} + \cdots + s]h = 0; \end{aligned}$$

that is, § 639, $f(a) + f'(a)h = 0$, or $h = -\dfrac{f(a)}{f'(a)}$. (3)

Thus, to approximate to the root of $x^3 - 2x - 5 = 0$ lying between 2 and 3, denote the root by $2 + h$ as in (2), neglect the terms involving h^2 and h^3 in $(2+h)^3 - 2(2+h) - 5 = 0$, and solve the resulting equation $10h - 1 = 0$. The result is $h = .1$, approximately.

Or proceed as follows, using the result given in (3):

$$f(x) = x^3 - 2x - 5 \text{ and } f'(x) = 3x^2 - 2.$$

$$\therefore f(2) = 8 - 4 - 5 = -1 \text{ and } f'(2) = 12 - 2 = 10.$$

Hence, by (3), $h = -\dfrac{-1}{10} = .1$, and the root is 2.1, approximately.

Next, using 2.1 for a, it is found that $f(2.1) = .061$ and $f'(2.1) = 11.23$. Hence, by (3), the next addition to the root is $-\dfrac{.061}{11.23}$, or $-.005$, and the root is $2.1 - .005$, or 2.095, approximately.

NOTE. — This method possesses but little practical value.

RECIPROCAL EQUATIONS

698. When each root of an equation is the reciprocal of some other root or of itself, the equation is called a **Reciprocal, or Recurring, Equation.**

699. Since the only numbers that are reciprocals of themselves are 1 and -1, there are four kinds of reciprocal equations:

1. Those whose roots in pairs are reciprocals of each other.
2. The first kind with the root 1 in addition.
3. The first kind with the root -1 in addition.
4. The first kind with the roots 1 and -1 in addition.

The four kinds may be illustrated, respectively, as follows:

1. $6x^4 + 5x^3 - 38x^2 + 5x + 6 = 0$; roots, 2, $\frac{1}{2}$, -3, $-\frac{1}{3}$.
2. $2x^3 - 7x^2 + 7x - 2 = 0$; roots, 2, $\frac{1}{2}$, 1.
3. $4x^3 - 13x^2 - 13x + 4 = 0$; roots, 4, $\frac{1}{4}$, -1.
4. $4x^4 - 17x^3 + 17x - 4 = 0$; roots, 4, $\frac{1}{4}$, 1, -1.

It is evident that equations of the second, third, and fourth kinds may be depressed, by dividing by $x - 1$, $x + 1$, and $x^2 - 1$, respectively, to equations of the first kind.

Hence, the first kind is the **standard reciprocal equation.**

700. Let $f(x) = mx^n + px^{n-1} + qx^{n-2} + \cdots + rx^2 + sx + t = 0$ (1)

be a reciprocal equation.

Then, for all values of x that make $f(x) = 0$,

$$x = \frac{1}{x}. \tag{2}$$

Substituting this value of x in (1), multiplying both members of the resulting equation by x^n, reversing the order of the terms, and changing signs throughout in case t is negative,

$$\pm tx^n \pm sx^{n-1} \pm rx^{n-2} \pm \cdots \pm qx^2 \pm px \pm m = 0, \tag{3}$$

the upper signs being used when t is positive and the lower ones when t is negative.

Since (1) and (3) have the same roots, their first members are composed of the same factors and, consequently, are identical.

$\therefore m = t,\ p = s,\ q = r, \cdots$; or else $m = -t,\ p = -s,\ q = -r, \cdots$.

Hence, *in a reciprocal equation, the coefficients of the terms equally distant from the first and last terms of* $f(x)$ *are equal when the last term is positive, and numerically equal with opposite signs when the last term is negative.*

701. Let $f(x) = \pm tx^n \pm sx^{n-1} \pm rx^{n-2} + \cdots + rx^2 + sx + t = 0$ be a reciprocal equation, the lower signs corresponding to a negative absolute term.

If n *is odd,* $f(x)$ has an even number of terms that may be grouped in pairs having equal or numerically equal coefficients. If the corresponding terms have *like* signs, by § 111, 4, each of the groups $t(x^n + 1)$, $sx(x^{n-2} + 1)$, $rx^2(x^{n-4} + 1)$, $\cdots$ contains $x + 1$

as a factor, whence -1 is a root of the equation and the equation is of the *third* kind; but if the corresponding terms have *unlike* signs, by § 111, 1, $x-1$ is a factor of each group, 1 is a root of the equation, and the equation is of the *second* kind.

If n is even, $f(x)$ has an odd number of terms and there is a middle term provided the equation is complete. If corresponding terms have *like* signs, the middle term satisfies the condition that terms equally distant from the ends are equal, and the equation is of the *first* kind; but if corresponding terms have *unlike* signs, the middle term cannot satisfy the condition that terms equally distant from the ends have unlike signs except when it is zero. In this case, then, the middle term is missing and $f(x)$ takes the form

$$f(x) = t(x^n - 1) + sx(x^{n-2} - 1) + rx^2(x^{n-4} - 1) + \cdots.$$

Since $n,\ n-2,\ n-4,\ \cdots$ are even, by § 111, 1 and 2, $f(x)$ is divisible by both $x-1$ and $x+1$. Hence 1 and -1 are roots and the equation is of the *fourth* kind.

It should be observed that *only standard reciprocal equations have an odd number of terms in the first member.*

702. Let $$p_0x^{2m} + p_1x^{2m-1} + \cdots + p_mx^m + \cdots + p_1x + p_0 = 0 \qquad (1)$$ represent a standard reciprocal equation.

Grouping corresponding terms and dividing by x^m,

$$p_0(x^m + x^{-m}) + p_1(x^{m-1} + x^{-(m-1)}) + \cdots + p_{m-2}(x^2 + x^{-2}) + p_{m-1}(x + x^{-1}) + p_m = 0. \qquad (2)$$

By the binomial formula,

$$(x + x^{-1})^2 = x^2 + 2 + x^{-2} = (x^2 + x^{-2}) + 2,$$

$$(x + x^{-1})^3 = x^3 + 3x + 3x^{-1} + x^{-3} = (x^3 + x^{-3}) + 3(x + x^{-1}),$$

$$(x + x^{-1})^4 = x^4 + 4x^2 + 6 + 4x^{-2} + x^{-4} = (x^4 + x^{-4}) + 4(x^2 + x^{-2}) + 6,$$

and so on. Transposing and substituting y for $x + x^{-1}$,

$$x^2 + x^{-2} = (x + x^{-1})^2 - 2 = y^2 - 2,$$

$$x^3 + x^{-3} = (x + x^{-1})^3 - 3(x + x^{-1}) = y^3 - 3y,$$

$$x^4 + x^{-4} = (x + x^{-1})^4 - 4(x^2 + x^{-2}) - 6$$

$$= y^4 - 4(y^2 - 2) - 6 = y^4 - 4y^2 + 2,$$

and so on. Continuing this process until the value of $x^m + x^{-m}$ is found in terms of y^m and lower powers of y, and substituting all these values in (2), the transformed equation after reduction takes the form

$$q_0 y^m + q_1 y^{m-1} + \cdots + q_{m-1} y + q_m = 0. \quad \text{Hence,}$$

PRINCIPLE 9. — *Every standard reciprocal equation may be transformed into an equation of half its degree.*

Other reciprocal equations may be depressed to the standard form by dividing by $x + 1$, $x - 1$, or both (§ 699), and then transformed to equations of half the degree of the depressed equations.

EXAMPLES

1. Solve $10x^4 - 77x^3 + 150x^2 - 77x + 10 = 0$.

SOLUTION. — Grouping the terms with like coefficients,

$$10(x^4 + 1) - 77x(x^2 + 1) + 150x^2 = 0.$$

Dividing both members by x^2,

$$10\left(x^2 + \frac{1}{x^2}\right) - 77\left(x + \frac{1}{x}\right) + 150 = 0.$$

Putting in the quadratic form by adding and subtracting 20,

$$10\left(x^2 + 2 + \frac{1}{x^2}\right) - 77\left(x + \frac{1}{x}\right) + 130 = 0.$$

Let $x + \frac{1}{x} = y$; then, $\quad 10y^2 - 77y + 130 = 0.$

Factoring, $\quad (2y - 5)(5y - 26) = 0.$

$$\therefore y = x + \frac{1}{x} = \frac{5}{2} \text{ or } \frac{26}{5}.$$

Solving these two equations as quadratics, $\quad x = 2, \frac{1}{2}, 5, \frac{1}{5}.$

The given equation is a *standard* reciprocal equation.

2. Solve $10x^5 - 67x^4 + 73x^3 + 73x^2 - 67x + 10 = 0$.

SOLUTION. — Grouping terms with like coefficients, it is evident that the first member is divisible by $x + 1$.

Depressing to the standard form,

$$\begin{array}{r} 10 - 67 + 73 + 73 - 67 + 10 \,\big|\, \underline{-1} \\ -10 + 77 - 150 + 77 - 10 \\ \hline 10 - 77 + 150 - 77 + 10 \end{array}$$

The rest of the solution is as given for Ex. 1.

$$\therefore x = -1, 2, \tfrac{1}{2}, 5, \tfrac{1}{5}.$$

3. Solve $x^6+2x^5-4x^4+8x^3-4x^2+2x+1=0$.

SOLUTION. — The equation is a standard reciprocal equation. Grouping terms with like coefficients and dividing by x^3,

$$\left(x^3+\frac{1}{x^3}\right)+2\left(x^2+\frac{1}{x^2}\right)-4\left(x+\frac{1}{x}\right)+8=0.$$

If $x+\frac{1}{x}=y$, as in § 702, $x^2+\frac{1}{x^2}=y^2-2$, and $x^3+\frac{1}{x^3}=y^3-3y$.

Substituting these values and reducing, the given equation is transformed into the cubic equation

$$y^3+2y^2-7y+4=0,$$

whose roots, by trial, are found to be 1, 1, -4.

Solving the quadratics $y=x+\frac{1}{x}=1$, 1, or -4,

$x=\frac{1}{2}(1+\sqrt{-3})$, $\frac{1}{2}(1-\sqrt{-3})$, $\frac{1}{2}(1+\sqrt{-3})$, $\frac{1}{2}(1-\sqrt{-3})$, $-2+\sqrt{3}$, $-2-\sqrt{3}$.

The student should show that these roots are reciprocals in pairs.

4. Solve $2x^5-15x^4+37x^3-37x^2+15x-2=0$.

5. Solve $12x^5+23x^4-135x^3-135x^2+23x+12=0$.

6. Solve $x^6-2x^5-7x^4+7x^2+2x-1=0$.

7. Solve $x^6+x^5-14x^4+17x^3-14x^2+x+1=0$.

8. Transform $x^8+x^7+5x^6+4x^5+9x^4+4x^3+5x^2+x+1=0$ into a quadratic equation.

BINOMIAL EQUATIONS

703. An equation of the form $x^n=a$, or $x^n-a=0$, is called a **Binomial Equation.**

Thus, $x^3-1=0$ and $x^3+1=0$ are binomial equations.

704. The *n* *n*th roots of a real number.

1. The n nth roots of unity are the n roots of the equation $x^n-1=0$.

By Descartes' rule, if n is odd, this equation has one real root, $+1$, and $n-1$ imaginary roots; if n is even, it has two real roots, $+1$ and -1, and $n-2$ imaginary roots.

Since $x^n - 1$ and its first derived function nx^{n-1} have no common factor, $x^n - 1$ has no multiple roots.

Hence, *the n nth roots of unity are all imaginary except one when n is odd or two when n is even, and all are different.*

2. The n nth roots of any real number a are the n roots of the binomial equation $x^n = a$, or $x^n - a = 0$.

Let any nth root of unity be represented by α (the Greek letter alpha) and let $\sqrt[n]{a}$ be the principal nth root of a.

Then, $$(\alpha\sqrt[n]{a})^n = \alpha^n(\sqrt[n]{a})^n = 1 \cdot a = a;$$

that is, *the n nth roots of a are found by multiplying the corresponding nth roots of unity by the principal nth root of a.*

705. Relation between the n nth roots of unity.

Let α be any imaginary nth root of unity.

Then, $$\alpha^n = 1,$$

and if m is a positive integer,

$$(\alpha^n)^m = 1, \text{ or } (\alpha^m)^n = 1;$$

that is, α^m is an nth root of unity.

Hence, *any power of an imaginary nth root of unity is equal to some one of the nth roots of unity.*

706. The three cube roots of a number.

On page 299 it is shown that the three cube roots of 1 are 1, $\frac{1}{2}(-1+\sqrt{-3})$, and $\frac{1}{2}(-1-\sqrt{-3})$, the roots of the equation $x^3 - 1 = 0$.

The student may verify the following statements:

The sum of the cube roots of 1 *is zero.*

The two imaginary cube roots of 1 *are conjugates, squares, and reciprocals of each other.*

The cube roots of 1 *are equal to any three consecutive powers of* $\frac{1}{2}(-1+\sqrt{-3})$.

In the following pages $\frac{1}{2}(-1+\sqrt{-3})$ will be represented by ω (the Greek letter omega), and $[\frac{1}{2}(-1+\sqrt{-3})]^2$, or $\frac{1}{2}(-1-\sqrt{-3})$, by ω^2.

Then, the cube roots of 1 are 1, ω, and ω^2; or ω, ω^2, and ω^3; or ω^2, ω^3, and ω^4; etc. For $\omega^3 = 1$, $\omega^4 = \omega^3 \cdot \omega = \omega$, etc.

Let a be any of the cube roots of l. Since the equation $x^3 - a^3 = 0$ gives the three cube roots of a^3, or of l, and since this equation is derived from $x^3 - 1 = 0$ by multiplying the roots of the latter by a, the cube roots of l are a, $a\omega$, and $a\omega^2$.

Hence, *the three cube roots of any number are obtained from any one of them by multiplying by* 1, ω, *and* ω^2, *respectively.*

Thus, the three cube roots of 64 are 4, 4 ω, and 4 ω^2.

ALGEBRAIC SOLUTIONS

707. So far the theory of equations has been applied to the solution of *numerical* equations and has been found sufficient to determine, exactly or approximately, the real roots of numerical equations of any degree. In the following pages the theory of equations will be applied to the solution of certain *literal* equations.

708. The **general,** or **algebraic, solution** of a literal equation consists in finding such an expression involving the general coefficients as will represent all of the roots at the same time.

Thus, the algebraic solution of $ax^2 + bx + c = 0$ consists in finding the expression $x = \dfrac{-b + \sqrt{b^2 - 4ac}}{2a}$ which has two values, inasmuch as $b^2 - 4ac$ has two square roots.

It is only a matter of common agreement that these two values shall be denoted by $\pm$ before the radical, which is then taken to mean the positive square root only.

In the following pages algebraic solutions of *cubic* and *biquadratic* equations will be given. In 1825 the mathematician Abel demonstrated the impossibility of obtaining *algebraic* solutions of equations of higher degree than the fourth.

709. Cardan's solution of the cubic equation.

By §§ 673, 676, the general cubic equation may be transformed into an equation of the form

$$x^3 + ax + b = 0. \qquad (1)$$

Since any number can be separated into two parts having a given product, it is permissible to suppose that each root of (1) may be divided into two parts whose product is $-\frac{1}{3}a$.

Let the parts be y and z.

Then, $$x = y + z, \tag{2}$$

and $$3yz = -a. \tag{3}$$

Substituting the values of x and a in (1),

$$y^3 + z^3 + b = 0. \tag{4}$$

From (3), $z = -\frac{a}{3y}$. Substituting in (4),

$$y^3 - \frac{a^3}{27y^3} + b = 0,$$

or $$y^6 + by^3 - \frac{a^3}{27} = 0. \tag{5}$$

Solving (5) as a quadratic in y^3,

$$y^3 = -\frac{b}{2} \pm \sqrt{\frac{a^3}{27} + \frac{b^2}{4}}, \tag{6}$$

whence, by (4), $$z^3 = -\frac{b}{2} \mp \sqrt{\frac{a^3}{27} + \frac{b^2}{4}}. \tag{7}$$

Taking the cube roots in (6) and (7), by (2),

$$x = \sqrt[3]{-\frac{b}{2} + \sqrt{\frac{a^3}{27} + \frac{b^2}{4}}} + \sqrt[3]{-\frac{b}{2} - \sqrt{\frac{a^3}{27} + \frac{b^2}{4}}}. \tag{8}$$

The lower signs are omitted because they give the same value as the upper signs, y and z being interchangeable.

This is commonly called *Cardan's formula* for the roots of the cubic equation $x^3 + ax + b = 0$.

Since every number has three cube roots, if the indicated cube roots in (8) are taken in all possible combinations, nine values of x result. But by (3) the parts of x must be so taken that their product is $-\frac{1}{3}a$, a rational number. *This relation between the parts of each root limits the number of roots to three.*

For representing the three cube roots of $-\frac{b}{2} + \sqrt{\frac{a^3}{27} + \frac{b^2}{4}}$ by h, $h\omega$, and $h\omega^2$, and the three cube roots of the conjugate expression by k, $k\omega$, and $k\omega^2$, it is seen that $h \cdot k$, $h\omega \cdot k\omega^2$, and $h\omega^2 \cdot k\omega$ are rational products while each of the six remaining products, $h \cdot k\omega$, $h \cdot k\omega^2$, $h\omega \cdot k$, $h\omega \cdot k\omega$, $h\omega^2 \cdot k$, and $h\omega^2 \cdot k\omega^2$, is irrational.

Hence, Cardan's formula is to be applied so as to give these roots

$$x = h + k,\ h\omega + k\omega^2,\ h\omega^2 + k\omega. \tag{9}$$

EXAMPLES

1. Solve $x^3 - 2x^2 + 48x - 96 = 0$ by Cardan's method.

SOLUTION. — Multiplying the roots by $\frac{3}{2}$, Prin. 6,

$$y^3 - 3y^2 + 108y - 324 = 0,$$

in which $y = \frac{3}{2}x$. Decreasing the roots of this equation by 1 (§ 676), the transformed equation lacking the second term is

$$z^3 + 105z - 218 = 0,$$

in which $z = y - 1 = \frac{3}{2}x - 1$.

Substituting 105 for a and -218 for b in Cardan's formula,

$$z = \sqrt[3]{109 + \sqrt{54756}} + \sqrt[3]{109 - \sqrt{54756}} = \sqrt[3]{343} + \sqrt[3]{-125}$$
$$= 7 - 5 \text{ or } 7\omega - 5\omega^2 \text{ or } 7\omega^2 - 5\omega$$
$$= 2 \text{ or } -1 + 6\sqrt{-3} \text{ or } -1 - 6\sqrt{-3}.$$

But since $z = \frac{3}{2}x - 1$, $\qquad x = \frac{2}{3}(z + 1)$.

$$\therefore\ x = 2,\ 4\sqrt{-3},\ -4\sqrt{-3}.$$

Solve by Cardan's method:

2. $x^3 + 24x + 56 = 0$.

3. $8x^3 - 20x^2 + 14x - 3 = 0$.

4. $27x^3 - 117x^2 + 105x + 49 = 0$.

5. $7x^3 + 15x^2 + 12x + 4 = 0$.

710. Discussion of the roots of a cubic equation.

If $\quad h = \sqrt[3]{-\frac{b}{2} + \sqrt{\frac{a^3}{27} + \frac{b^2}{4}}}$ and $k = \sqrt[3]{-\frac{b}{2} - \sqrt{\frac{a^3}{27} + \frac{b^2}{4}}}$,

the three roots of $x^3 + ax + b = 0$ are, § 709, (9), $h + k$, $h\omega + k\omega^2$ and $h\omega^2 + k\omega$.

1. Since $\frac{b^2}{4}$ is always positive, if a is positive or if a is negative and $\frac{a^3}{27}$ is numerically less than $\frac{b^2}{4}$, h and k are real and unequal.

Hence, one root is real and the other two are imaginary.

Each of the equations $x^3 + 6x + 2 = 0$ and $x^3 - 2x - 4 = 0$ has one real and two imaginary roots.

2. If a is negative and $\frac{a^3}{27}$ is numerically equal to $\frac{b^2}{4}$, the numbers h and k are equal and consequently $h\omega + k\omega^2 = h\omega^2 + k\omega$; also, h and k are real, and since $\omega + \omega^2 = -1$, $h + k$, $h\omega + k\omega^2$, and $h\omega^2 + k\omega$ are real.

Hence, the roots are real and two of them are equal.

The roots of $x^3 - 12x + 16 = 0$ are real and two of them are equal.

3. If $\frac{a^3}{27} + \frac{b^2}{4}$ is negative, h^3 and k^3 are complex numbers.

Since there is no algebraic method of finding the cube root of a complex number, this is called the *Irreducible Case.*

In this case, however, the roots may be found by trigonometrical formulæ, and it may be proved that the roots are real and unequal. In the irreducible case, then, it is easy to find the roots by trial or by Horner's method.

By Cardan's formula the roots of $x^3 - 7x + 6 = 0$ are given by

$$x = \sqrt[3]{-3 + \sqrt{-\tfrac{343}{27} + 9}} + \sqrt[3]{-3 - \sqrt{-\tfrac{343}{27} + 9}}$$

$$= \sqrt[3]{-3 + \tfrac{10}{9}\sqrt{-3}} + \sqrt[3]{-3 - \tfrac{10}{9}\sqrt{-3}},$$

which we cannot evaluate by algebra. But by trial the roots are found to be 1, 2, and -3.

711. Descartes' solution of the biquadratic equation.

By §§ 673, 676, the general biquadratic equation may be transformed into an equation of the form

$$x^4 + qx^2 + rx + s = 0. \tag{1}$$

Assume $x^4 + qx^2 + rx + s = (x^2 + Ax + B)(x^2 - Ax + C)$, (2)

in which A, B, and C are to be determined. Expanding (2),

$$x^4 + qx^2 + rx + s = x^4 + (-A^2 + B + C)x^2 + (AC - AB)x + BC,$$

from which, § 590, $-A^2 + B + C = q$, $AC - AB = r$, $BC = s$. (3)

Eliminating B and C from the equations in (3),

$$A^6 + 2qA^4 + (q^2 - 4s)A^2 - r^2 = 0. \tag{4}$$

Equation (4) is a cubic in A^2. Hence, § 685, Cor. 1, A^2 always has at least one positive real value, and when this has been found, the values of B and C may be found by means of (3). Finally,

substituting the values of A, B, and C in (2), the roots of the given biquadratic are obtained by solving the quadratics

$$x^2 + Ax + B = 0 \text{ and } x^2 - Ax + C = 0.$$

Equation (4) is called the **reducing cubic** of (1).

Examples

1. Solve the equation $x^4 - 6x^3 + 3x^2 + 22x - 6 = 0$.

Solution. — Multiplying the roots by 2 so that the coefficient of the third power of the unknown number may be a multiple of 4,

$$y^4 - 12y^3 + 12y^2 + 176y - 96 = 0, \text{ in which } y = 2x.$$

Decreasing the roots of this equation by $\frac{1}{4}^2$, or 3,

$$z^4 - 42z^2 + 32z + 297 = 0, \text{ in which } z = 2x - 3.$$

Since this equation is in the form of (1), $q = -42$, $r = 32$, and $s = 297$. Substituting these values in the reducing cubic (4),

$$A^6 - 84A^4 + 576A^2 - 1024 = 0.$$

Simplifying by dividing the roots by 4,

$$A_1^3 - 21A_1^2 + 36A_1 - 16 = 0, \text{ in which } A_1 = \tfrac{1}{4}A^2.$$

By trial, $A_1 = 1$ is found to be one root of this equation.

$$\therefore \tfrac{1}{4}A^2 = 1, \text{ whence } A = \sqrt{4 \cdot 1} = 2.$$

Substituting 2 for A, -42 for q, 32 for r, and 297 for s in (3),

$$B + C = -38,\ C - B = 16, \text{ and } BC = 297.$$

Solving, $B = -27$ and $C = -11$.

$$z^4 - 42z^2 + 32z + 297 = (z^2 + Az + B)(z^2 - Az + C)$$
$$= (z^2 + 2z - 27)(z^2 - 2z - 11)$$

Since $z = 2x - 3$,

$$= 16(x^2 - 2x - 6)(x^2 - 4x + 1).$$

That is, $x^4 - 6x^3 + 3x^2 + 22x - 6 = 16(x^2 - 2x - 6)(x^2 - 4x + 1)$.

Equating the quadratic factors to zero and solving,

$$x = 1 \pm \sqrt{7},\ 2 \pm \sqrt{3}.$$

Solve the following equations:

2. $x^4 - 2x^2 - 8x - 3 = 0$.

3. $x^4 - 4x^2 - 8x + 35 = 0$.

4. $x^4 - 12x^3 + 55x^2 - 102x + 124 = 0$.

5. $x^4 - 6x^3 + 11x^2 - 10x + 2 = 0$.

6. $x^4 - 2x^3 - 15x^2 + 16x + 14 = 0$.